STATE OF ILLINOIS
DEPARTMENT OF TRANSPORTATION

Various Routes
OVD SIN STR REP & REPL 2007-9
Various Counties
Sheet 19 of 50
Contract Number 44933

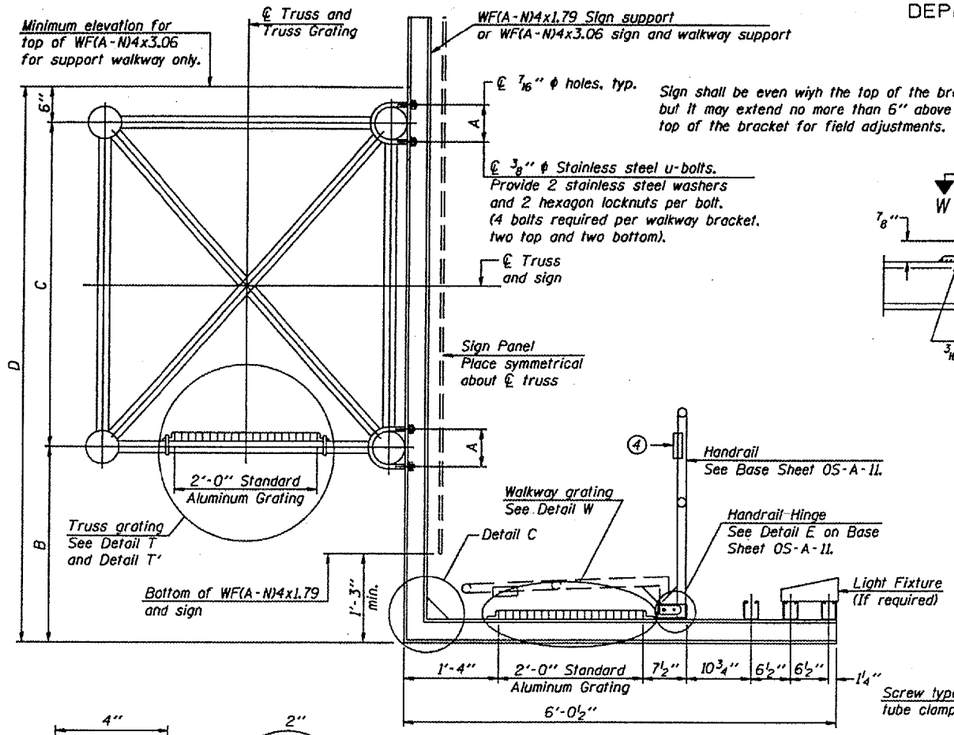

SECTION B-B

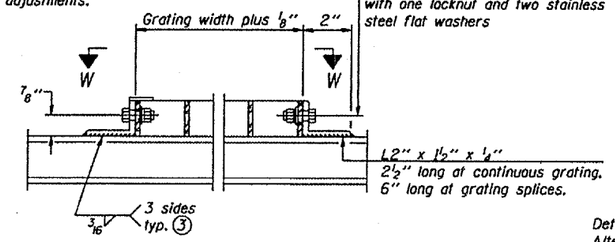

DETAIL W
(Walkway grating)

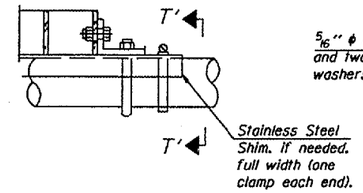

DETAIL T'
(Truss grating splice)
Details not shown same as Detail T.
Alternate materials may be used subject to the Engineer's review and approval.

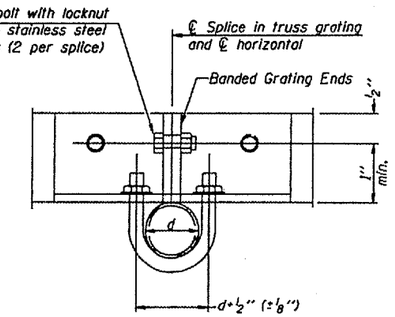

SECTION T'-T'

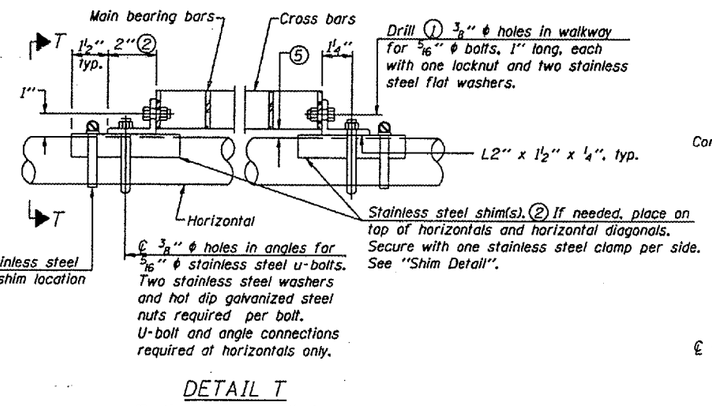

DETAIL T
(Continuous Truss grating)

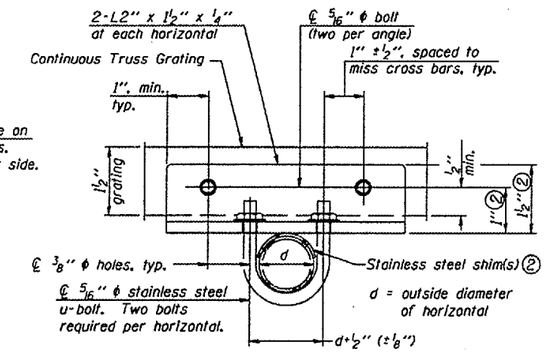

SECTION T-T

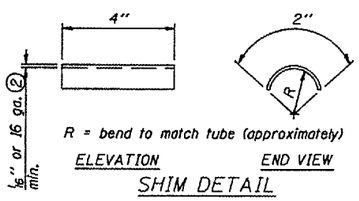

SHIM DETAIL

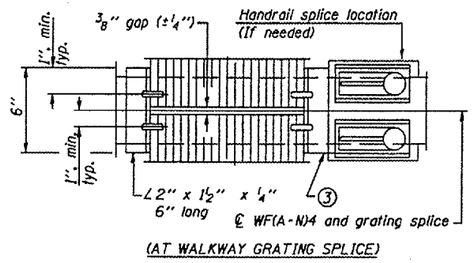

(AT WALKWAY GRATING SPLICE)

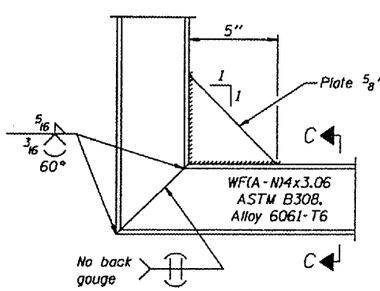

DETAIL C

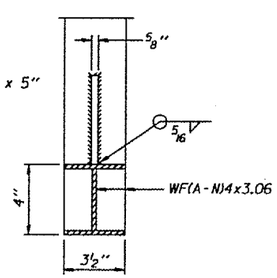

SECTION C-C

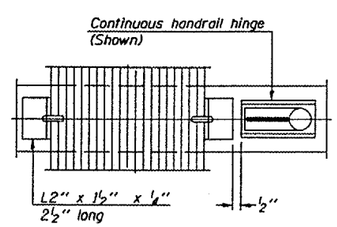

(CONTINUOUS WALKWAY GRATING)

SECTION W-W

SPECIFICATIONS FOR STANDARD ALUMINUM GRATING

Main Bearing Bars shall be 3/16" x 1½" on 1 3/16" centers and conform to ASTM B221 Alloy 6061-T6.

Cross bars shall be 3/16" x 1½" on 4" centers and conform to ASTM B221 Alloy 6063-T5 or 6061-T6.

OR

Aluminum Grating with modified "I" sections for main bearing bars shall meet the following requirements:

Main bars shall conform to ASTM B221 Alloy 6061-T6 and have a minimum section modulus equal to 0.0705 in.^{3} per bar, a depth of 1½", spaced on 1 3/16" centers.

Cross bars shall conform to ASTM B221 Alloy 6063-T5 or T-42 and spaced on 4" centers.

This Sheet For Information Only

Structure Number	Station	A	B	C	D

① Drilling holes in grating may be done in shop or field, based on Contractor's preference and subject to accurate alignment.

② Stainless steel shims shall be placed as shown in Detail T if needed to compensate for alignment variations between horizontal and diagonal pipes beyond adjustment provided by angles. Thicker shims may be used subject to shims performing properly.

③ If Handrail Joint present, weld angle to WF(A-N)4 and ¼" extension bars. (See Base Sheet OS-A-11.)

④ PL ⅛" x ½" x 2" welded to handrail posts to protect locations that contact grating.

⑤ Tube to grating gap may vary from 0 to ½", max. to align walkway, allow for camber, etc.

OVERHEAD SIGN STRUCTURES
ALUMINUM WALKWAY DETAILS

District 2
End Support Replacement

DESIGNED -	
CHECKED -	
DRAWN -	
CHECKED -	

- 20
EXAMINED
ENGINEER OF BRIDGE DESIGN
PASSED
ENGINEER OF BRIDGES AND STRUCTURES

NUMBER	REVISION	DATE

OS-A-10 7/01/2006