CONTRACT NO. 62883

F.A.P. RTE.	SECTION	COUNTY	TOTAL SHEETS	SHEET NO.
342	(G&12) 1-N-1	LAKE	70	8
STA.		TO STA.		
FED. ROAD DIST. NO.	ILLINOIS	FED. AID PROJECT		

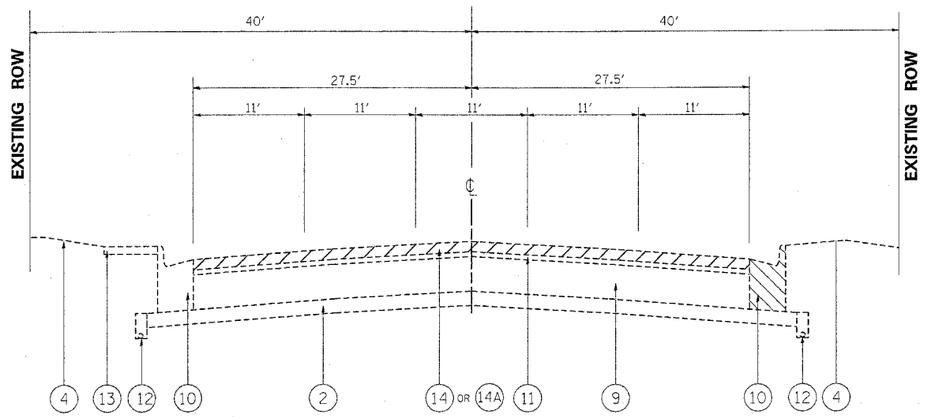

EXISTING TYPICAL SECTION

HUNT CLUB ROAD
STA. 10+00 TO STA. 16+75

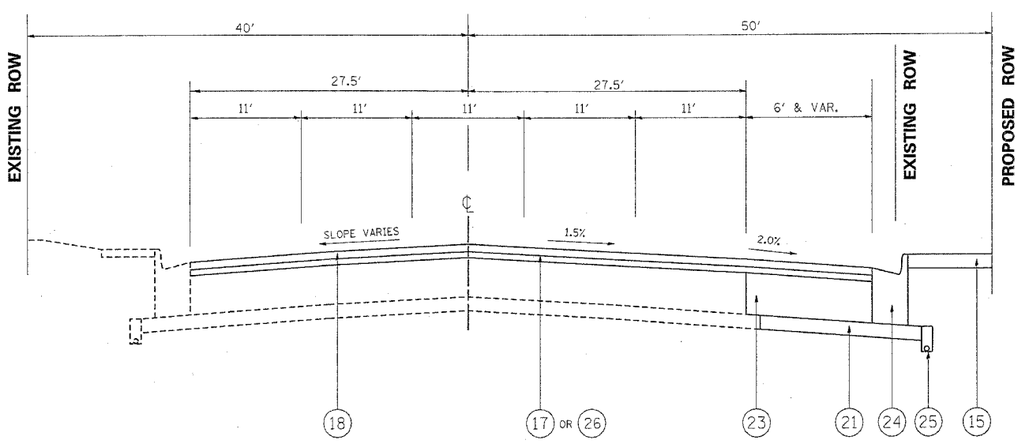

PROPOSED TYPICAL SECTION

HUNT CLUB ROAD
STA. 10+00 TO STA. 16+75

*** APPROXIMATE LOCATION OF VARIABLE MILLING**

STA. 11+00 TO STA. 13+00

LEGEND:

1. EXISTING PCC PAVEMENT, 10"
2. EXISTING AGGREGATE BASE COURSE, 4"
3. EXISTING COMB. CURB & GUTTER, TYPE V
4. EXISTING GROUND
5. EXISTING FABRIC FORMED CONCRETE REVETMENT MATS
6. EXISTING HOT-MIX ASPHALT SHOULDER, 8"
7. EXISTING AGGREGATE SHOULDERS, TYPE B, 8"
8. EXISTING EROSION CONTROL BLANKET
9. EXISTING HOT-MIX ASPHALT BASE COURSE (MS 1200), 9"
10. EXISTING COMB. CONC. CURB & GUTTER REMOVAL
11. EXISTING HOT-MIX ASPHALT SURFACE COURSE, 4"

11A. EXISTING HOT-MIX ASPHALT SURFACE COURSE, 2¾"

12. EXISTING PIPE UNDERDRAIN, 4"
13. EXISTING HOT-MIX ASPHALT SHOULDER, 4"
14. PROPOSED HOT-MIX ASPHALT SURFACE REMOVAL ,VARIABLE DEPTH (3/4" MIN. AND VARIES TO 2½")

14A. PROPOSED HOT-MIX ASPHALT SURFACE REMOVAL, 2½"

15. PROPOSED EROSION CONTROL BLANKET, SEEDING CL. 2A
16. PROPOSED HOT-MIX ASPHALT SHOULDER, 8"
17. PROPOSED POLY. HOT-MIX ASPHALT BINDER COURSE, IL-19, N90 ,VARIABLE DEPTH (2¼" MIN. AND VARIES TO 8")
18. PROPOSED POLYMERIZED HOT-MIX ASPHALT SURF. COURSE MIX "F", N90, 1-3/4"
19. PROPOSED COMB. CONC. CURB & GUTTER, TYPE M.2-12
20. PROPOSED COMB. CONC. CURB & GUTTER, TYPE M.4-24
21. PROPOSED SUB-BASE GRANULAR MATERIAL, TYPE B, 4"
22. PROPOSED CONCRETE MEDIAN SURFACE 5"
23. PROPOSED HOT-MIX ASPHALT BASE COURSE, 10"
24. PROPOSED COMB. CONC. CURB & GUTTER, TYPE B.6-24
25. PROPOSED PIPE UNDERDRAIN, 4"
26. PROPOSED POLY. LEVELING BINDER (MACHINE METHOD), IL-4.75, N50,¾"

REVISIONS	
NAME	DATE

ILLINOIS DEPARTMENT OF TRANSPORTATION

TYPICAL CROSS SECTION
IL. RTE. 120 (BELVIDERE ROAD)
@ HUNT CLUB ROAD

SCALE: VERT. HORIZ.
DATE
DRAWN BY
CHECKED BY

PLOT DATE = 10/14/2005
FILE NAME = s:\proj\ecb\p101883\designcos.dgn
PLOT SCALE = 10.000 ' / IN.
REFERENCE = REF