DISTRICT	COUNTY	TOTAL SHEETS	SHEET NO.
1	WINNEBAGO	8	4

SHEET NO. 4
6 SHEETS

STATE OF ILLINOIS
[redacted]

FOR INFORMATION ONLY

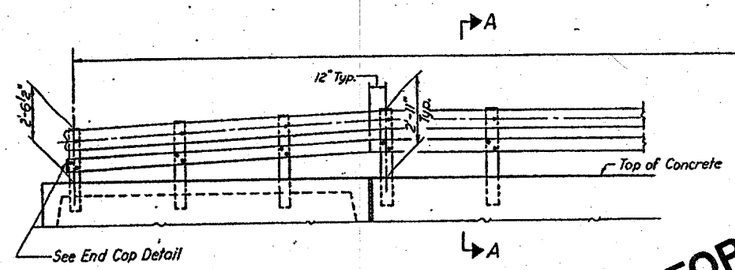

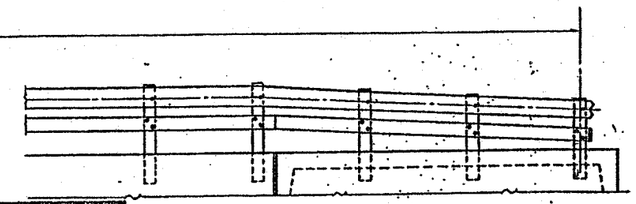

[redacted]

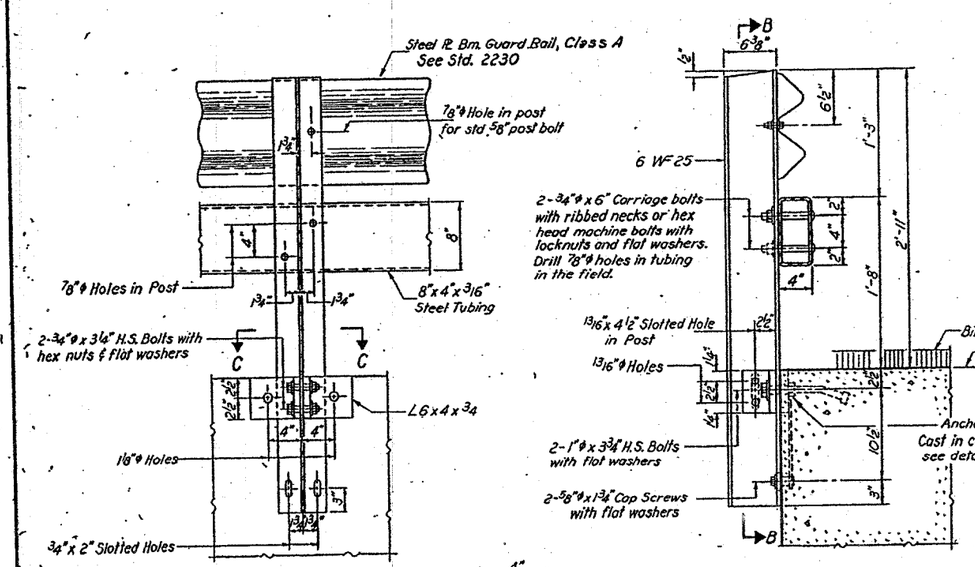

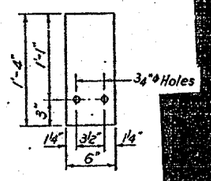

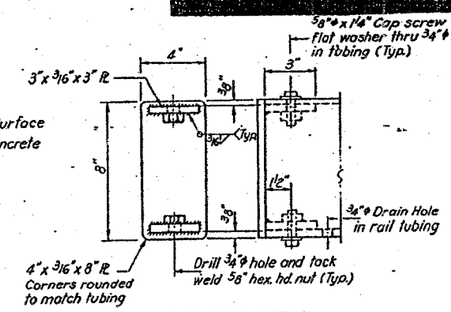

NOTES

Hollow structural steel tubing shall conform to the requirements of ASTM designation A-501 "Hot Formed Welded and Seamless Carbon Steel Structural Tubing."

All other steel shapes and plates shall conform to the requirements of ASTM designation A-441 or A-36.

Bolts, cap screws, and nuts shall conform to the requirement of ASTM designation A-307 except for high strength bolts, nuts and washers noted which shall conform to ASTM designation A-325.

All bolts, nuts, cap screws, washers and lock washers shall be galvanized in accordance with ASTM designation A-153.

All posts, railing, rail splices, anchor devices and angles shall be galvanized after shop fabrication in accordance with ASTM designation A-123 and A-385. Galvanized rail shall not be painted.

Railing shall be in accordance with Section 508 of the Standard Specifications, except as noted, and shall be paid for at the contract unit price per lineal foot for STEEL RAILING, TYPE W.

All field drilled holes shall be coated with an approved zinc rich paint before erection.

The lower portion of the post flange in contact with concrete shall receive two coats of asphalt paint conforming to Section 714.08 Type B or place ⅛" fabric bearing pad between the post and concrete.

The ¾"φ high strength bolts used to connect the 6x4x¾ angles to the post shall be tightened in accordance with Article 710.11 of the Standard Specifications. The 1"φ high strength bolts connecting the angles to the concrete beam shall be tightened to a snug fit and given an additional ⅛ turn.

For multi-span bridges, sufficient ¼"x 6"x 1'-4" galvanized steel shims shall be provided to align rail between adjacent spans. Cost incidental to Steel Railing.

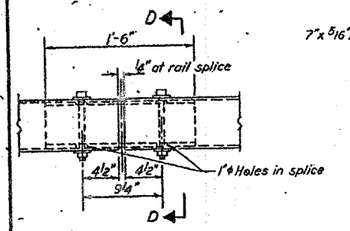

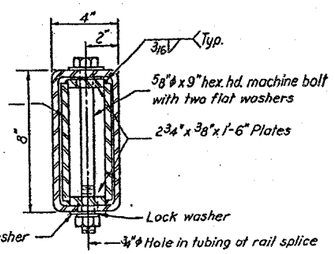

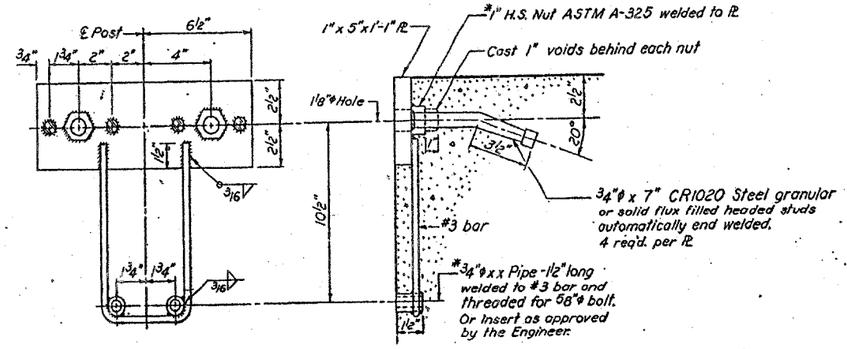

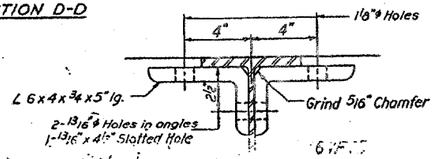

BILL OF MATERIAL

Item	Unit	Quantity
STEEL RAILING, TYPE W	Lin. Ft.	138

DESIGNED [signature]
CHECKED [signature]
EXAMINED [signature]
PASSED [signature]

TYPE W
STEEL RAILING
S.B.I. RT. 75 SEC. 116BR
WINNEBAGO COUNTY