STATE OF ILLINOIS
DEPARTMENT OF TRANSPORTATION

ROUTE NO.	SECTION	COUNTY	TOTAL SHEETS	SHEET NO.
F.A.P. 693	(119B-3)I	TAZEWELL	31	14
FED. ROAD DIST. NO. 7	ILLINOIS	FED. AID PROJECT-		

SHEET NO. 5
14 SHEETS

Contract #68415

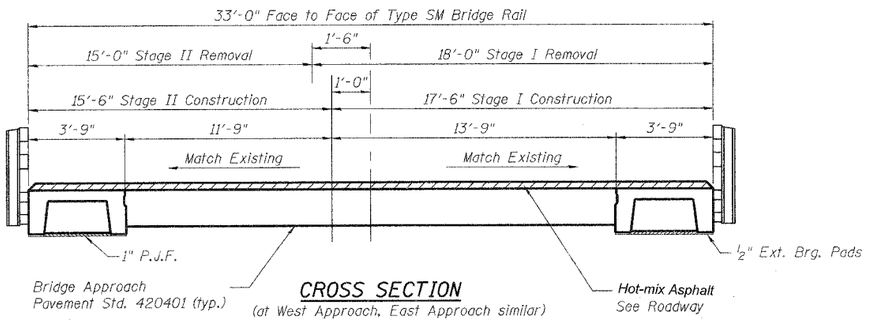

CROSS SECTION
(at West Approach, East Approach similar)

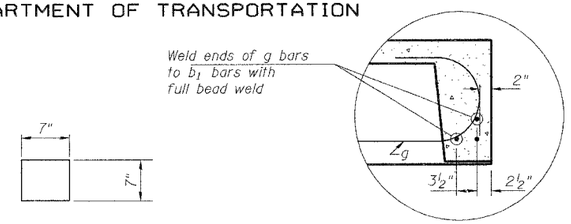

DETAIL A

@ Exterior Corners
16-½" Fabric Pads Req'd.

BEARING PADS

Note:
The surface of the member shall not deviate more than 1/1200 of the full length of the member from a straight line connecting the two end points on the member's surface. In addition to State inspection and prior to erection, the beam shall be tested and approved by the resident Engineer at the jobsite.

The units shall remain in the bottom supporting forms until the concrete has attained a compressive strength of no less than 3,500 pounds per square inch.

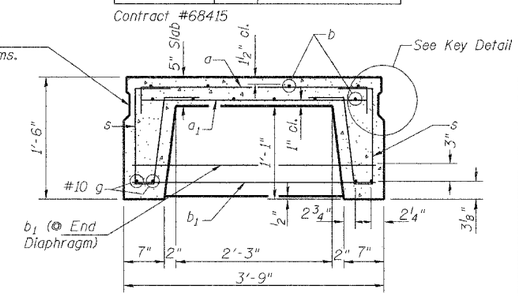

TYPICAL SECTION THRU BEAM

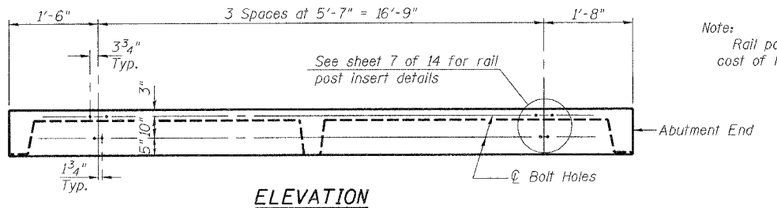

ELEVATION
Showing rail post spacing

Note:
Rail post inserts are included in the cost of Precast Concrete Bridge Slab.

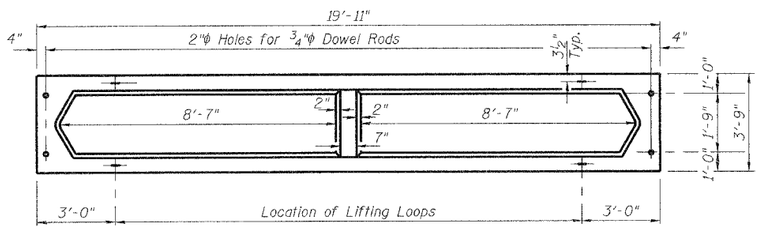

TYPICAL PLAN OF BEAM

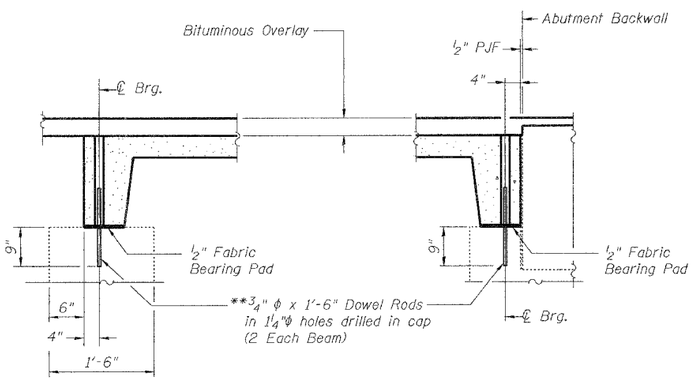

TYPICAL SECTION THROUGH EXISTING NELSON BEAM FOUNDATION

SECTION THROUGH WEST ABUTMENT
(East Abutment Similar)

** Dowel Rods to be grouted after beams are in place and allowed to cure (Min. 24 hrs.) prior to placing approach slab.

Note:
Burn existing dowel rods flush with existing surface. Grind existing dowel rods smooth and seal with epoxy. Cost is included with Removal of Existing Superstructures.

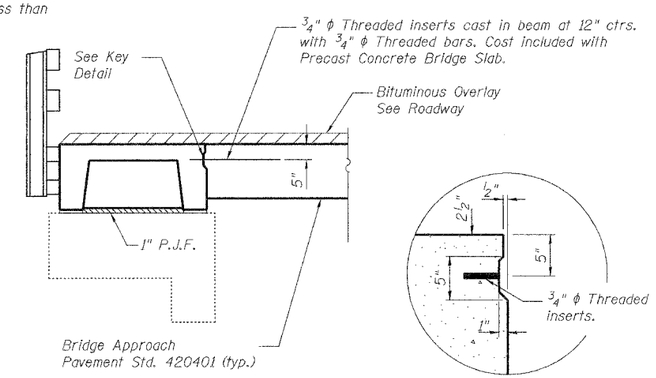

NELSON BEAM CONNECTOR DETAIL

KEY DETAIL

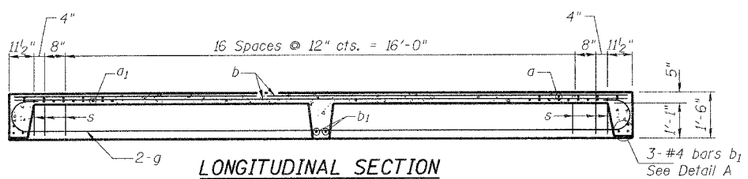

LONGITUDINAL SECTION

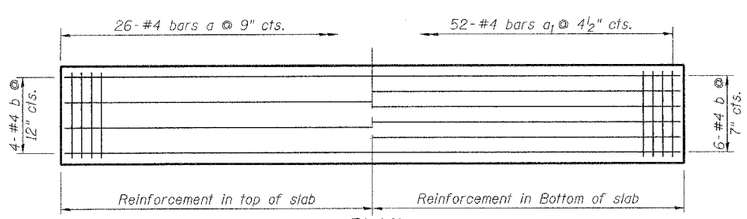

PLAN
Showing Slab Reinforcement

2-½"ϕ Strands/Loop, 2 Ea. End, Ea. Beam. Loop shall be burned off after beams have been erected. Strands shall conform to the requirements to the requirements of AASHTO M 203.

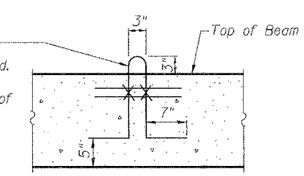

LIFTING LOOP
Approved alternate may be substituted for the above.

BILL OF MATERIAL

ITEM	Unit	Shape
Precast Concrete Bridge Slab	Sq. Ft.	299

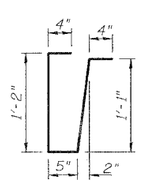

BAR s

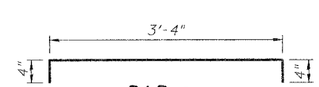

BAR a

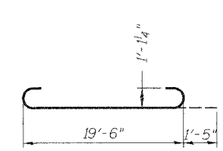

BAR g

Note:
Tack welding of stirrups to bottom longitudinal reinforcement bars will not be permitted except as otherwise authorized in writing by the Engineer.

DESIGNED BWP	THOUVENOT, WADE & MOERCHEN, INC. ENGINEERS • SURVEYORS • PLANNERS
CHECKED ALN	TWM
DRAWN BWP	CORPORATE OFFICE 4940 OLD COLLINSVILLE RD. SWANSEA, ILLINOIS 62226 TEL (618) 624-4488 FAX (618) 624-6688 E-MAIL: corp@twm-inc.com
CHECKED KPC	

NELSON BEAM DETAILS
ILLINOIS ROUTE 9 OVER
PRAIRIE CREEK
F.A.P. ROUTE 693 SECTION (119B-3)I
TAZEWELL COUNTY
SN 090-0061