STATE OF ILLINOIS
DEPARTMENT OF TRANSPORTATION

ROUTE NO.	SECTION	COUNTY	TOTAL SHEETS	SHEET NO.
		Tazewell	29	16
FED. ROAD DIST. NO. 7		ILLINOIS	FED. AID PROJECT-	

SHEET NO. 5
10 SHEETS

Contract Number: 68484

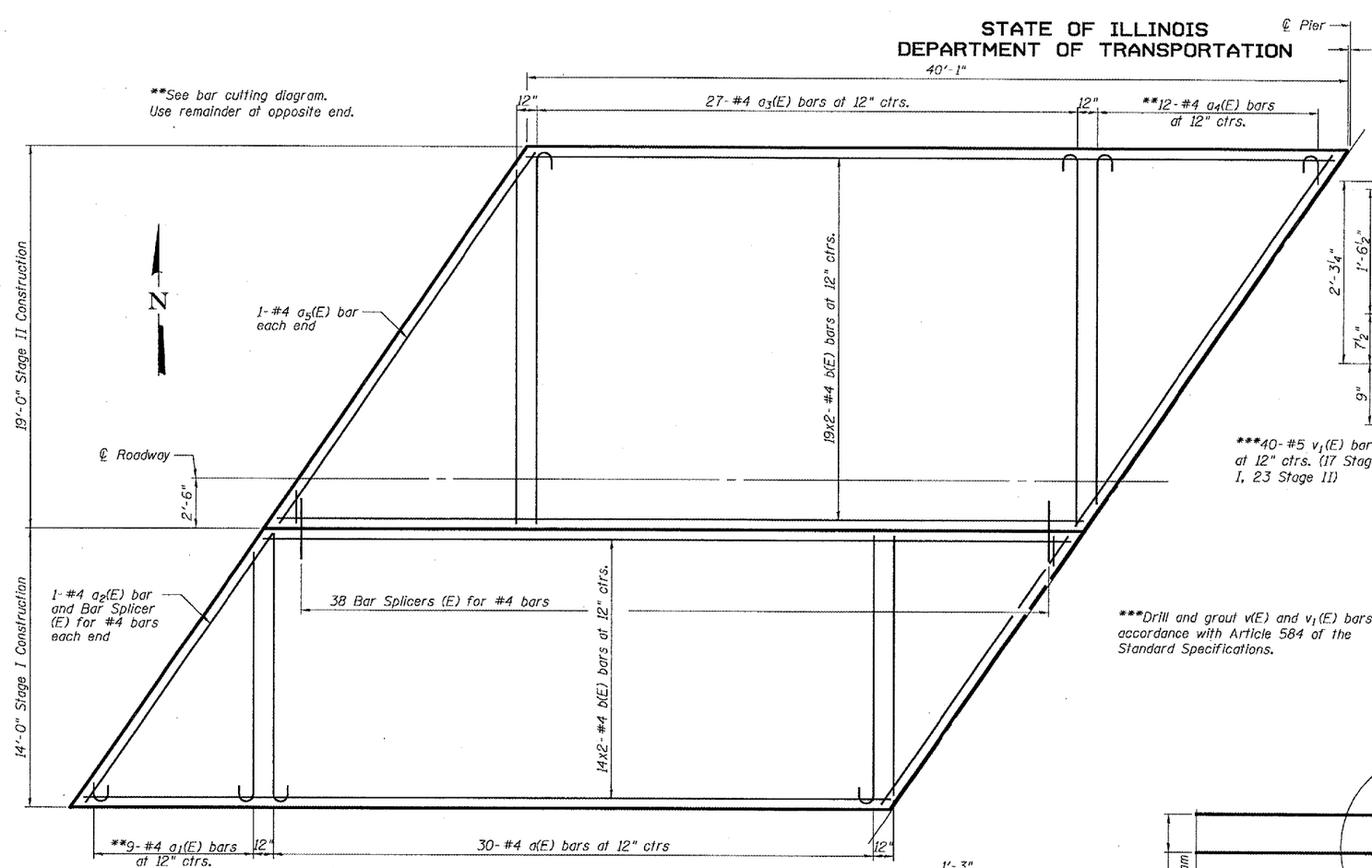

PARTIAL OVERLAY PLAN

(Span 1 Shown, Span 2 Similar)

Note:
Concrete wearing surface to be poured after grouting keys.

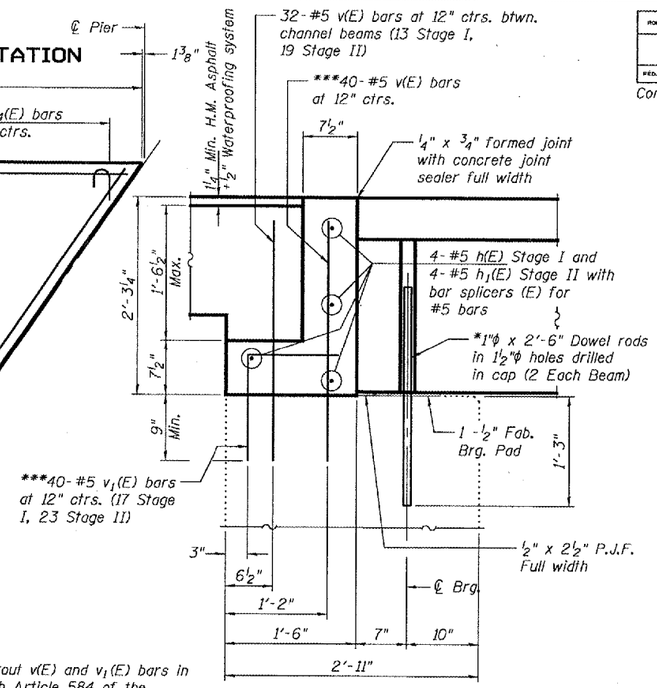

***Drill and grout v(E) and v1(E) bars in accordance with Article 584 of the Standard Specifications.

TYPICAL ABUTMENT SECTION

(Dimensions at Rt. L's to End of Beam)
(Near ℄ Roadway)

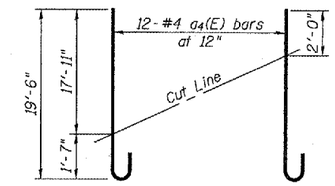

a4(E) FIELD CUTTING DIAGRAM

Order a4(E) full length. Cut as shown and use remainder of bars in opposite end.

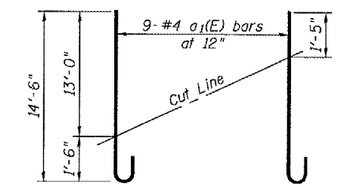

a1(E) FIELD CUTTING DIAGRAM

Order a1(E) full length. Cut as shown and use remainder of bars in opposite end.

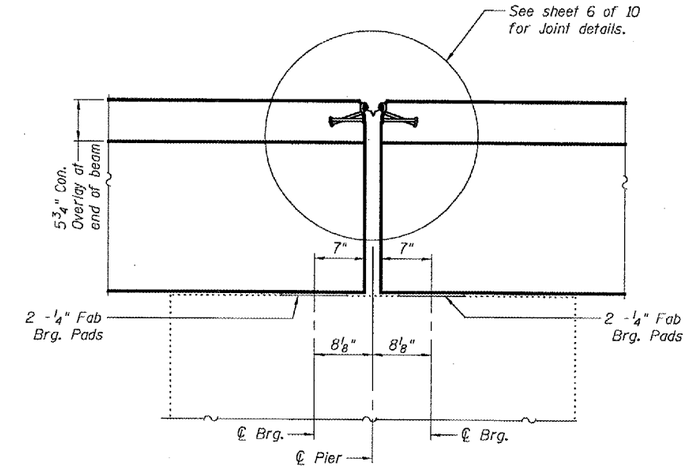

TYPICAL PIER SECTION

(Dimensions at Rt. L's to End of Beam)
(Near ℄ Roadway)

*Existing Dowel Rods shall be burned off flush with the top of the existing concrete, ground smooth, and sealed with epoxy. Cost to be included in the cost of Removal of Existing Superstructure. New Dowel Rods shall be grouted and allowed to cure a minimum of 24 hours prior to grouting the shear keys.

TYPICAL PIER SECTION

(Dimensions at Rt. L's to End of Beam)
(Near ℄ Roadway)

BAR v1(E)

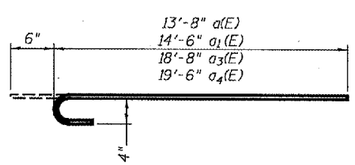

BARS a(E), a1(E), a3(E) and a4(E)

MIN. BAR LAP

#4 = 1'-8"

BILL OF MATERIAL

Bar	No.	Size	Length	Shape
a(E)	60	#4	14'-2"	
a1(E)	18	#4	15'-0"	
a2(E)	4	#4	16'-6"	
a3(E)	54	#4	19'-2"	
a4(E)	24	#4	20'-0"	
a5(E)	4	#4	22'-9"	
b(E)	132	#4	20'-9"	
h(E)	8	#5	16'-6"	
h1(E)	8	#5	22'-9"	
v(E)	144	#5	2'-9"	
v1(E)	80	#5	2'-6"	
Reinforcement Bars, Epoxy Coated			Pound	4,640
Bar Splicers			Each	88
Concrete Wearing Surface, 5"			Sq. Yd.	294
Concrete Structures			Cu. Yd.	5.7

Bars indicated thus 1 x 2-#5 etc. indicates 1 line of bars with 2 lengths per line.

DESIGNED	P.S.J.
CHECKED	S.J.B.
DRAWN	Drew Christopher
CHECKED	P.S.J. S.J.B.

December 8, 2006
EXAMINED John A. Morris
ENGINEER OF STRUCTURAL SERVICES
PASSED Ralph E. Anderson
ENGINEER OF BRIDGES AND STRUCTURES

OVERLAY DETAILS AND TYPICAL SECTIONS
IL 122 / SUGAR CREEK
TAZEWELL COUNTY
SN 090-0058