CONTRACT NO. 70262

F.A.P. RTE.	SECTION	COUNTY	TOTAL SHEETS	SHEET NO.
709	104BR-1	CHAMPAIGN	24	4
STA.		TO STA.		
FED. ROAD DIST. NO.	ILLINOIS	FED. AID PROJECT		

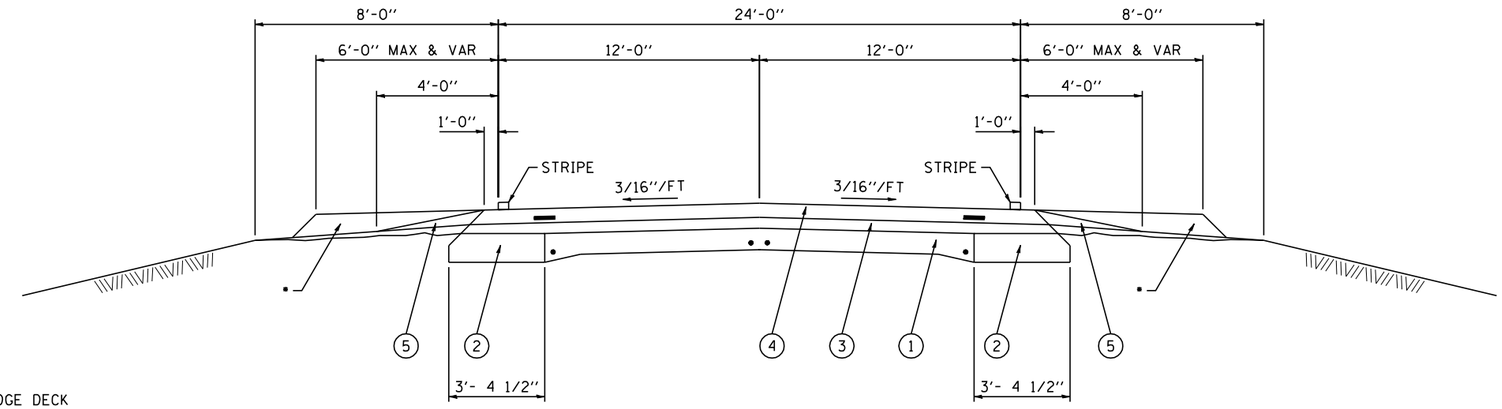

EXISTING TYPICAL SECTION

STA 1454+03 TO STA 1462+07

• BITUMINOUS SHOULDER SEE SCHEDULE

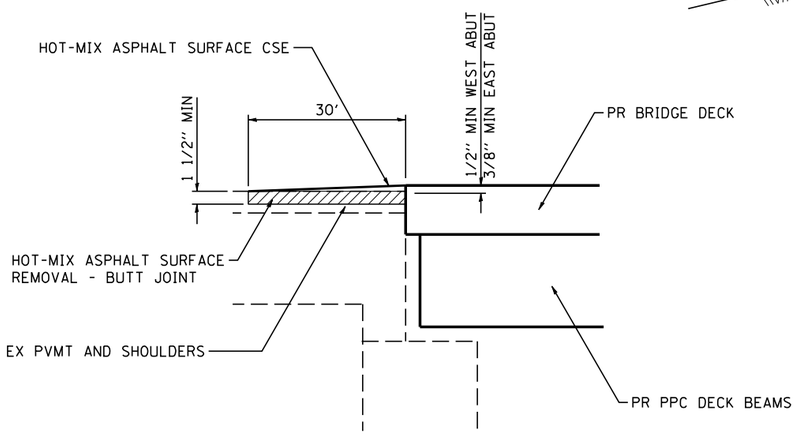

BUTT JOINT DETAIL

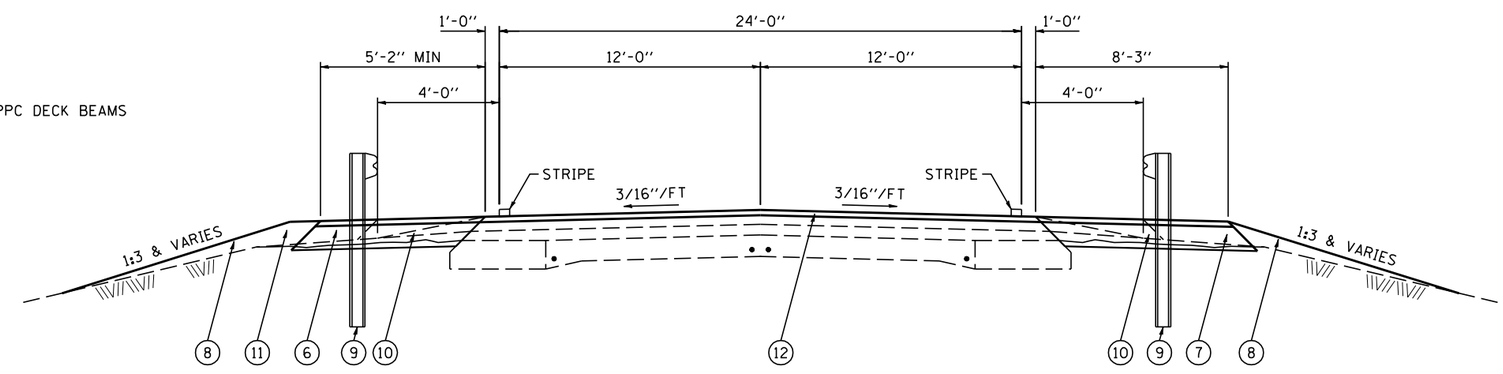

PROPOSED TYPICAL SECTION

STA 1454+03 TO STA 1462+07

1. 9-6-9 P.C.C. PAVEMENT
2. BASE COURSE WIDENING, 9"
3. BITUMINOUS CONCRETE BINDER COURSE, 3"
4. BITUMINOUS CONCRETE SURFACE COURSE, 3 7/8" & VARIES
5. AGGREGATE SHOULDERS
6. PR BASE COURSE (OPTION) 5'-2" MIN WIDTH. SEE SCHEDULE
7. PR BASE COURSE (OPTION) 8'-3" WIDTH. SEE SCHEDULE
8. PR FURNISHED EXCAVATION
9. PR GUARDRAIL & TERMINAL SECTIONS. SEE SCHEDULE
10. PR AGGREGATE SHOULDER, TYPE B (SLOPE 9% MAX) SEE SCHEDULE
11. EARTH SHOULDER IN ACCORDANCE WITH STANDARD 630301
12. PR HOT-MIX ASPHALT SURFACE COURSE, 168 LBS/SQ. YD., SEE SCHEDULE

PLOT DATE = 10/17/2006
FILE NAME = s:\projects\cd505602\submit 10.13.06\dgn\typ-section.dgn
PLOT SCALE = 2:1/25 / IN.
USER NAME = kwpeck

REVISIONS	
NAME	DATE

COOMBE-BLOXDORF P.C.
Engineers /Land Surveyors
Springfield, Illinois
Design Firm License No. 184-002703

ILLINOIS DEPARTMENT OF TRANSPORTATION

TYPICAL SECTIONS
US 136 OVER LONE TREE CREEK
FAP ROUTE 709, SECTION 104BR-1
CHAMPAIGN COUNTY

SCALE:
DATE: 04/19/06
DRAWN BY CFC
CHECKED BY