CONTRACT NO. 76A28

F.A.I. RTE.	SECTION	COUNTY	TOTAL SHEETS	SHEET NO.
55/70	82-4I-1	ST. CLAIR	19	12
STA. _____	TO STA. _____			
FED. ROAD DIST. NO. _	ILLINOIS	FED. AID PROJECT		

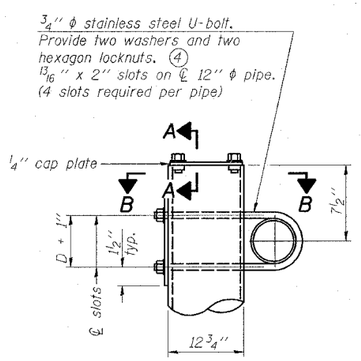

DETAIL A

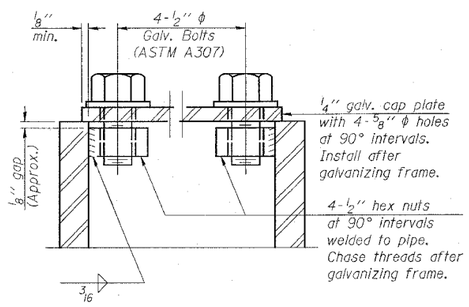

SECTION A-A

As an alternate to bolts, may use galvanized drive-fit caps installed after galvanizing frame.

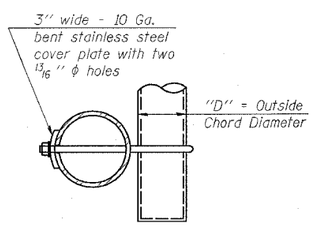

SECTION B-B

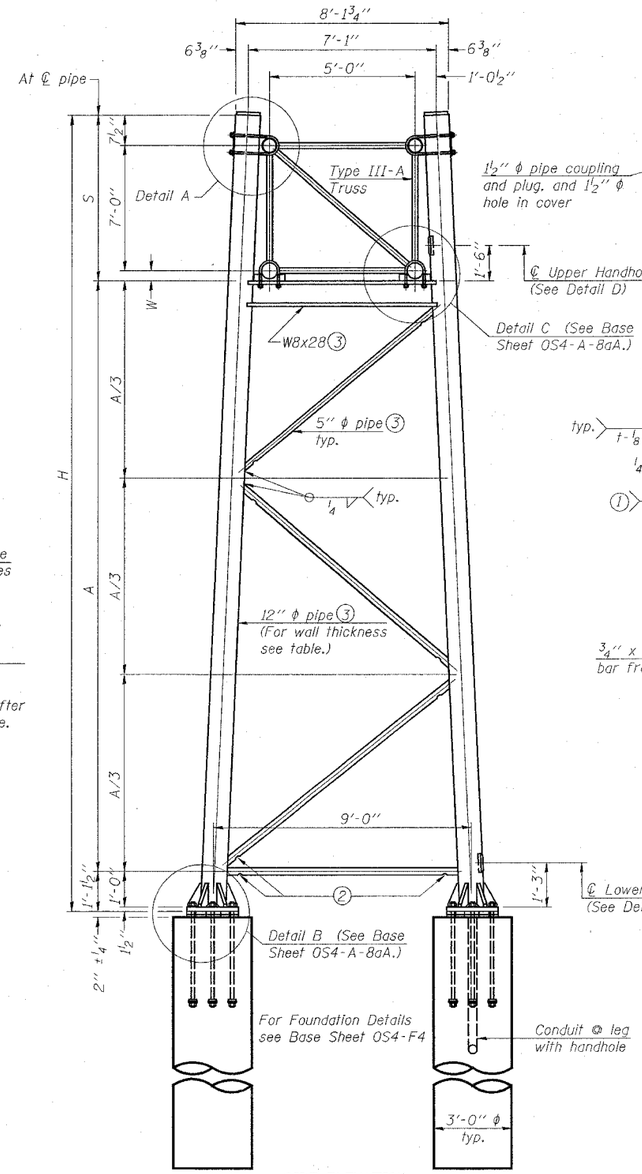

SIDE ELEVATION

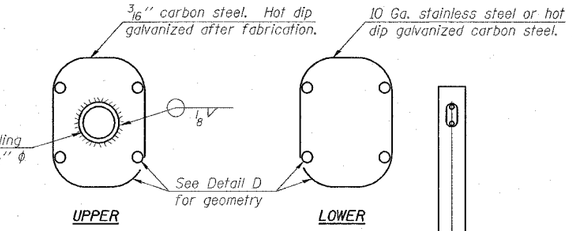

HANDHOLE COVERS

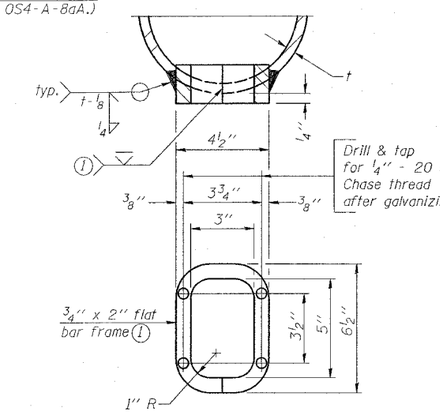

Provide 6 1/2'' x 4 1/2'' cover. Provide 4-5/16'' ϕ holes in cover for 1/4''-20 round head hot dip galvanized or stainless steel machine screws. (See cover details)

DETAIL D

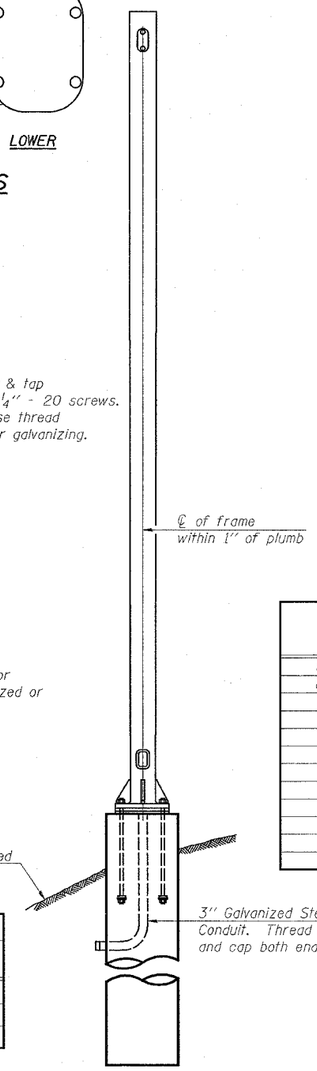

END ELEVATION

Dimensions		
Truss Chord Nominal Dia.	W	S
7''	4 3/4''	8'-0 1/4''
8 1/2''	5 1/2''	8'-1''
9''	5 3/4''	8'-1 1/4''

TRUSS SUPPORT DETAILS

(12'' ϕ Pipe-Type III-A Truss

Support Design Loads: See Base Sheet OS-A-1 for design and loading criteria.

Load combinations checked include deadload plus:

a) 100% wind normal to sign, 20% parallel to sign

b) 60% wind normal to sign, 30% parallel to sign

(1) In lieu of fabricated handhole frame as shown, may cut from 2'' plate (rolling direction vertical). All cut faces to be ground to ANSI Roughness of 500 μin or less.

(2) Galvanizing vent holes of adequate size shall be provided on underside at each end of bracing pipes. Alternately, holes may be provided in wall of pipe column. All vent holes shall be drilled and de-burred, typ.

(3) Steel pipe, plate, carbon steel handhole covers and rolled sections shall be hot dip galvanized after fabrication. Painting is not permitted. See Base Sheet OS-A-1.

(4) See General Notes for fasteners.

(5) Dimensions shown are based on selection criteria in the Sign Structures Manual. Nonstandard applications must have dimensions verified or amended as appropriate.

(6) "H" based on 15'-0'' or actual sign height, whichever is greater.

* For dynamic message sign installations, provide upper and lower handholes in both legs of each support frame.

Structure Number	Station	Support Left	Support Right	Pipe Wall Thickness	H (6)	A
8S082I055R001.4	105+67.6	X		.33	27.458	18.312
8S082I055R001.4	105+67.6		X	.33	30.343	21.197

NUMBER	REVISION	DATE

OVERHEAD SIGN STRUCTURES
SUPPORT FRAME FOR
TYPE III-A ALUMINUM TRUSS

ILLINOIS DEPARTMENT OF TRANSPORTATION

F.A.I. ROUTE 55/70
SECTION 82-4I-1
ST. CLAIR COUNTY

PLOT DATE = $DATE$
FILE NAME = $FILE$
PLOT SCALE = $SCALE$
REFERENCE = REF

OS4-A-8a 7/01/2006