ROUTE NO.	SECTION	COUNTY	TOTAL SHEETS	SHEET NO.
FAU 1517	03-00247-00-BR	KANE	121	62
FED. ROAD DIST. NO. 1	ILLINOIS	FED. AID PROJECT-		

CONTRACT #83867

SHEET NO. SW-21

SW-30 SHEETS

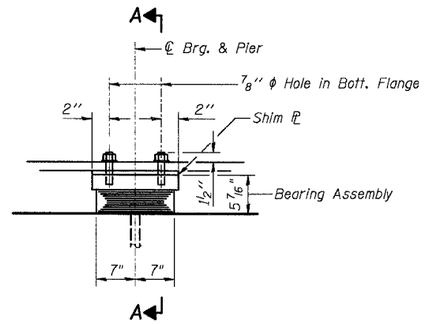

ELEVATION AT PIERS 1 & 3

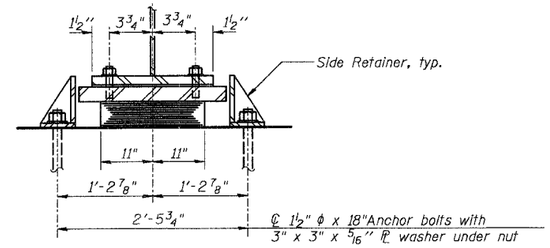

SECTION A-A

TYPE I ELASTOMERIC EXP. BRG.

(20 Required)

Notes:
See sheet SW-22 for Anchor Bolt installation.

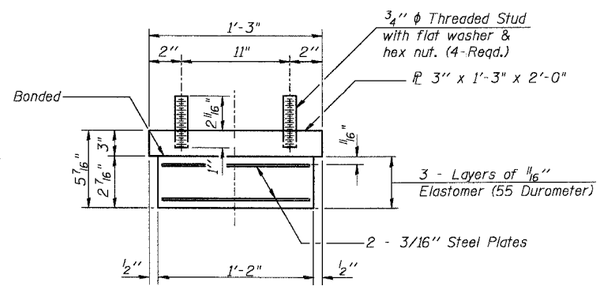

BEARING ASSEMBLY

Note:
Shim plates shall not be placed under Bearing Assembly.

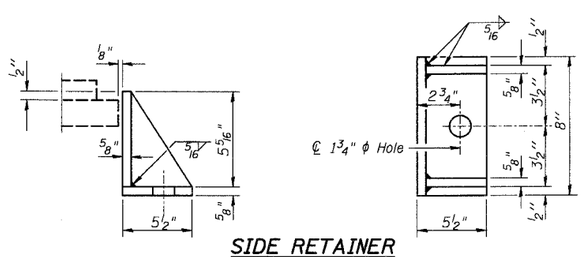

SIDE RETAINER

Equivalent rolled angle with stiffeners will be allowed in lieu of welded plates. Weight included with Structural Steel.

BILL OF MATERIAL

Item	Unit	Quantity
Elastomeric Bearing Assembly, Type I	Each	20

DESIGNED	AEU
CHECKED	RGD
DRAWN	WJH
CHECKED	NRF

SMITH ENGINEERING CONSULTANTS, INC.
CIVIL/STRUCTURAL ENGINEERS AND SURVEYORS
www.smithengineering.com
E-mail: mail@smithengineering.com

REVISIONS

NAME	DATE

CITY OF AURORA

BEARING DETAILS II
ILLINOIS AVENUE
OVER THE FOX RIVER
SECTION NO. 03-00247-00-BR
KANE COUNTY
STRUCTURE NO. 045-6009

DATE 7-28-2006

COMPANY NAME: SEC INC.
PROJECT CONTACT: PROJECT.CONTACT
CLIENT: CITY OF AURORA
6/7/2006 9:17:05 PM
C:\Users\wjhill\AppData\Local\Temp\AcPublish_3176\SW-21 Bearing details 2.bmp jobs-city of aurora\structure\west bridge\dgn\045-6009-SW21-SW30.dgn