CONTRACT NO. 83876

F.A.U. RTE.	SECTION	COUNTY	TOTAL SHEETS	SHEET NO.
1321	0711 N-1	DuPAGE	54	7
STA.		TO STA.		
FED. ROAD DIST. NO. 1	ILLINOIS	FED. AID PROJECT		

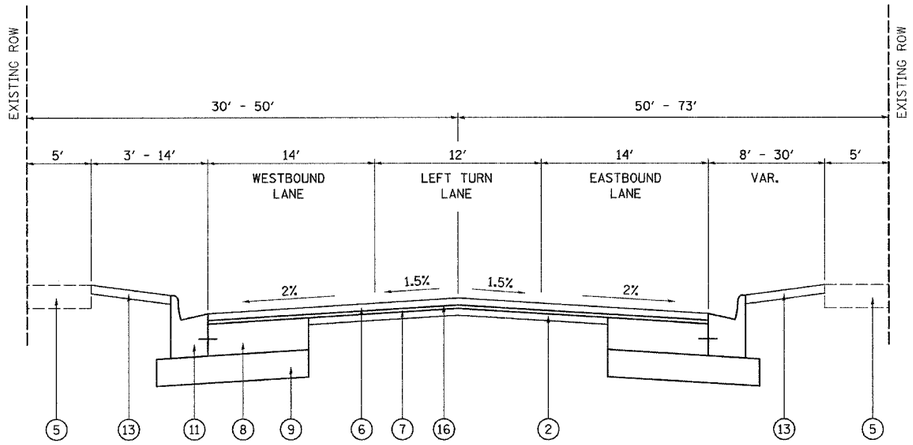

PROPOSED TYPICAL SECTION
ILLINOIS ROUTE 19 (IRVING PARK ROAD)

STA. 1000+89.2 TO STA. 1009+00
(WIDENING AND RESURFACING)

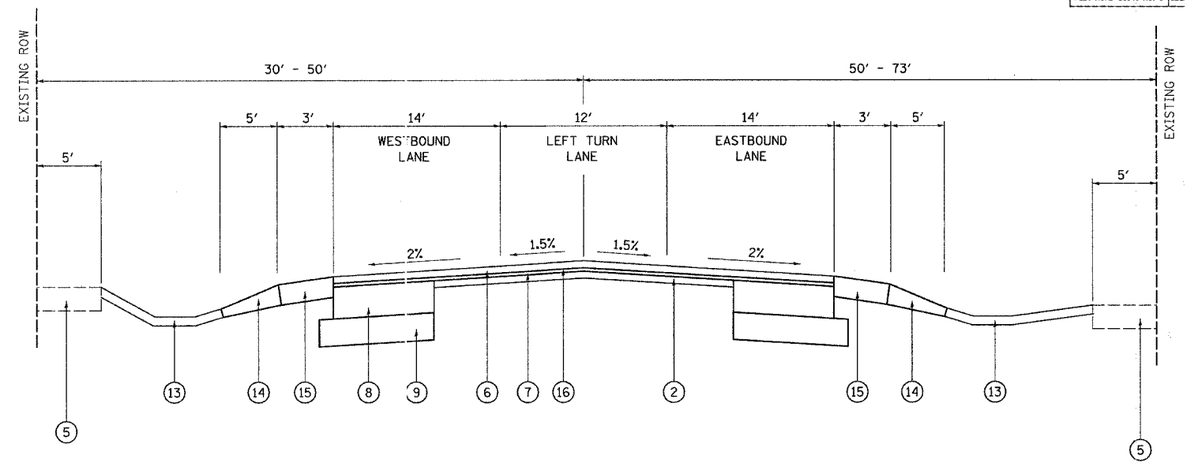

PROPOSED TYPICAL SECTION
ILLINOIS ROUTE 19 (IRVING PARK ROAD)

STA. 1009+00 TO STA. 1011+98.3
(WIDENING AND RESURFACING)

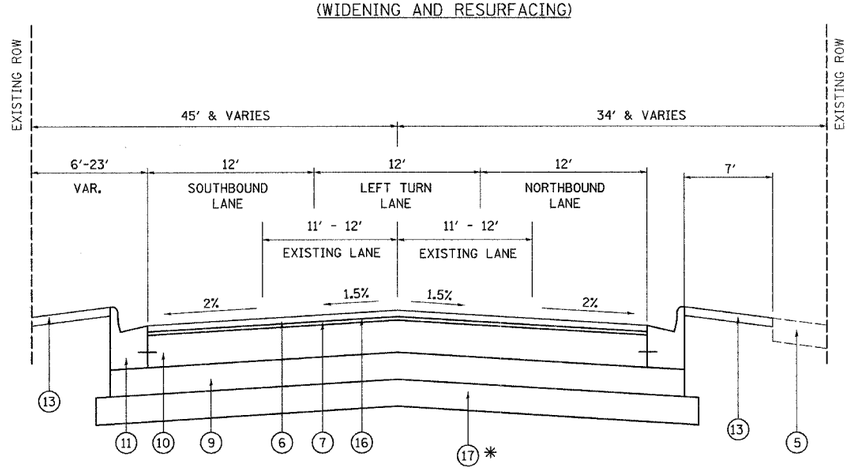

PROPOSED TYPICAL SECTION
BLOOMINGDALE ROAD

STA. 2003+31.3 TO STA. 2007+74.7

WIDENING AND RESURFACING
STA. 2003+31.3 TO STA. 2006+42.6

RECONSTRUCTION
STA. 2006+42.6 TO STA. 2007+74.7

* STATION 2006+42.6 TO STATION 2007+74.7

LEGEND:

1. EXISTING BITUMINOUS OVERLAY, 6" AND VAR.
1A. PROP. HOT-MIX ASPHALT SURFACE REMOVAL, VARIABLE DEPTH
2. EXISTING PCC BASE COURSE, 6" AND VAR.
3. EXISTING B-6.12 CURB AND GUTTER
4. EXISTING BIT. OR AGG. SHOULER
5. EXISTING SIDEWALK (TYP.)
6. PROP. POLYMERIZED HOT-MIX ASPHALT SURFACE COURSE, MIX "D", N70
7. PROP. 1" LEVELING BINDER (MACHINE METHOD), N70
8. PROP. 9" PCC BASE COURSE
9. PROP. 6" SUBBASE GRANULAR MATERIAL
10. PROP. HOT-MIX ASPHALT BASE COURSE, 7"
11. PROP. B-6.24 CURB AND GUTTER
12. PROP. SIDEWALK, 5" (TYP.)
13. PROP. TOPSOIL FURNISH AND PLACE, 4"; SODDING, SALT TOLERANT; SEEDING, CLASS 2A
14. PROP. AGGREGATE SHOULDERS, TYPE B, 6"
15. PROP. HOT-MIX ASPHALT SHOULDERS, 6"
16. PROP. STRIP REFLECTIVE CRACK CONTROL
17. PROP. POROUS GRANULAR EMBANKMENT, SUBGRADE 12 INCH

STRUCTURAL DESIGN TRAFFIC: Year 2014

PV = 28,805 SU = 689 MU = 449

ROAD/STREET CLASSIFICATION: Class 1

PERCENT OF STRUCTURAL DESIGN TRAFFIC IN DESIGN LANE:

P = 50% S = 50% M = 50%

TRAFFIC FACTOR: Actual TF = 1.79 AC Type = 20

Minimum TF = _____

AC GRADE: Binder = PG 64-22 Surface = PG 64-22

SUBGRADE SUPPORT RATING:

SSR = _____ (Sta. _____ to _____)

SSR = _____ (Sta. _____ to _____)

STRUCTURAL PAVEMENT DESIGN INFORMATION BLOCK

REVISIONS	
NAME	DATE

ILLINOIS DEPARTMENT OF TRANSPORTATION
F.A.U. ROUTE 1321 (IL. ROUTE 19)

PROPOSED TYPICAL SECTIONS
IL. ROUTE 19

SCALE: VERT. NONE HORIZ. NONE
DATE 11/21/06
DRAWN BY ES
CHECKED BY JIP

PLOT DATE = 11/21/06
FILE NAME = W:\ILRTE19\Bloomingdale\Proposed_Plans_Rev Geom\Typical_Sections\Proposed Sections.dgn
PLOT SCALE = $SCALE$
USER NAME = $USER$