F.A.I. RTE.	SECTION	COUNTY	TOTAL SHEETS	SHEET NO.
80/94	*	COOK	631	104
STA.		TO STA.		
FED. ROAD DIST. NO.		ILLINOIS	FED. AID PROJECT	

* (2425 & 2626) R-2 CONTRACT NO. 62111

ALL DIMENSIONS IN METERS EXCEPT PAY ITEMS AND UNLESS NOTED OTHERWISE

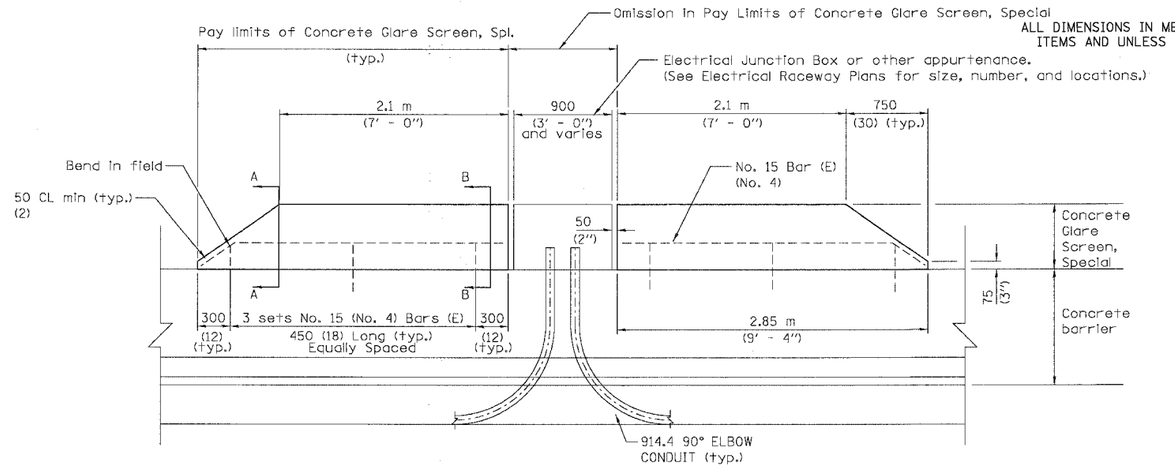

ELEVATION

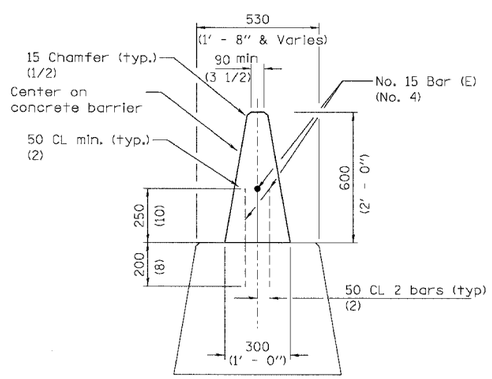

SECTION A-A

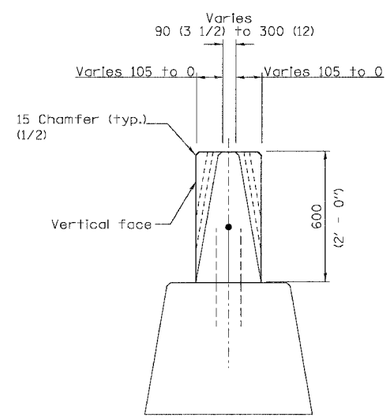

SECTION B-B

(This section with vertical face shall be used in tangent sections between junction boxes and or other appurtenances.)

All dimensions are in millimeters (inches) unless otherwise shown.

REVISIONS	
NAME	DATE

ILLINOIS DEPARTMENT OF TRANSPORTATION
I-80/94/US 6
KINGERY-BORMAN EXPRESSWAY

CONCRETE GLARE SCREEN, SPECIAL

SCALE NONE DRAWN BY ACE/CAD
DATE 06/05 CHECKED BY

AMERICAN CONSULTING ENGINEERS

..\RDD0001A.DGN
8-18-2005, 10:09:34
T:\DOCUMENT\93PT50\CIVIL\DGN\PD17023A.DGN
BAJZEKKJ