F.A.I. RTE.	SECTION	COUNTY	TOTAL SHEETS	SHEET NO.
80/94	*	COOK	631	322
STA.		TO STA.		
FED. ROAD DIST. NO.		ILLINOIS	FED. AID PROJECT	

* (2425 & 2626) R-2 CONTRACT NO. 62111

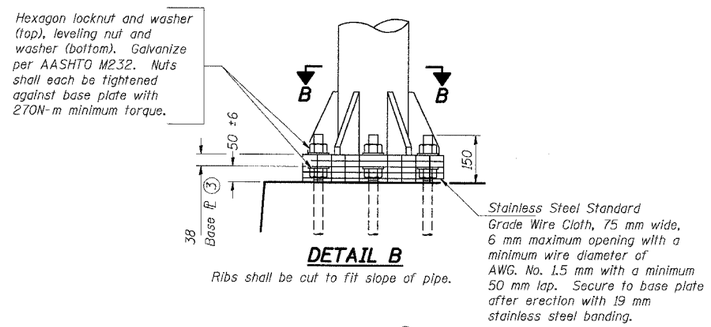

DETAIL B

Ribs shall be cut to fit slope of pipe.

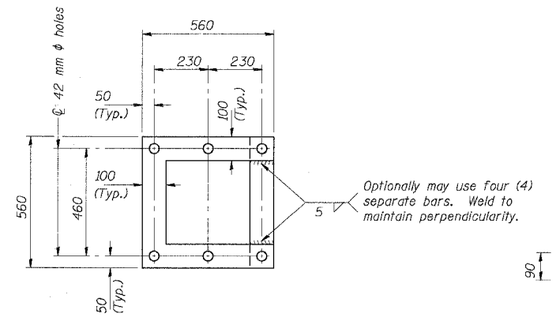

POSITIONING PLATE(S)

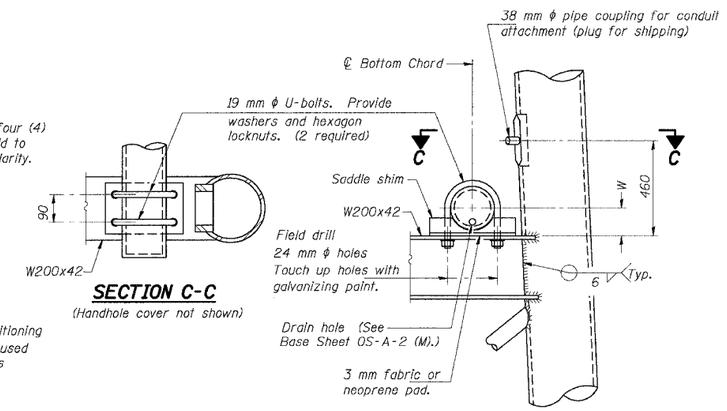

SECTION C-C

(Handhole cover not shown)

DETAIL C

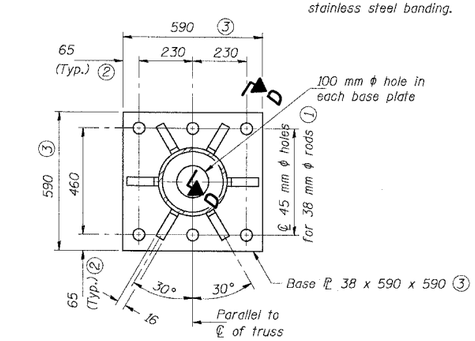

SECTION B-B

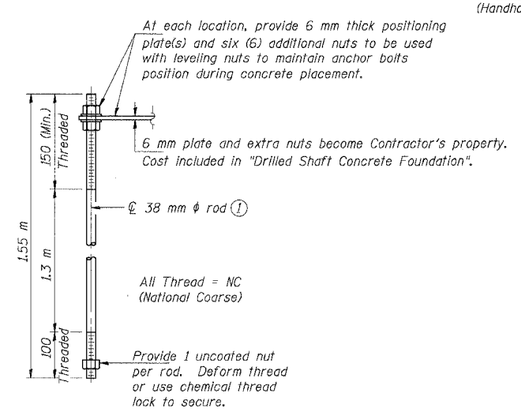

ANCHOR ROD DETAIL*

Anchor rods shall conform to AASHTO M314 Grade 380 (55) and meet Charpy V-Notch (CVN) energy energy of 20 J at 5° C. Galvanize upper 305 mm per AASHTO M232. No welding shall be permitted on rods.

*** Anchor Rods and Positioning Plates for the right support frame will be furnished and installed by others under a separate contract 62350. This Contractor shall field verify dimensions and locations of Anchor Rods prior to fabricating pipe support base plates. The holes for Anchor Rods shall be adjusted if necessary.

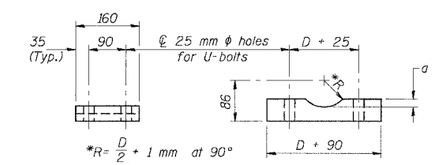

$*R = \frac{D}{2} + 1$ mm at 90°

D = Outside Diameter of Chord.
For W, see Base Sheet OS-A-6.

Truss Chord Nominal Dia.	a
178	25
216	32
229	35

SADDLE SHIM DETAIL

ASTM B26M Alloy 356-F
or
ASTM B209M Alloy 6061-T651
(4 required per sign truss)

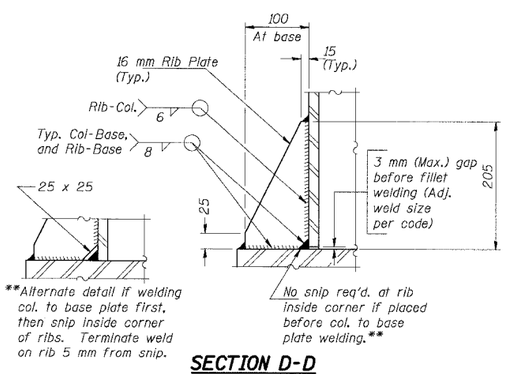

SECTION D-D

Notes: For Type III-A Truss spans greater than 45.7 m. and up to 48.8 m:

① 44 mm ϕ rod, 51 mm ϕ holes

② 70 mm edge distance

③ Base ℄ 41 x 600 x 600

TYPE III-A TRUSS

DN 300 PIPE SUPPORT FRAME DETAILS

REVISIONS	
NAME	DATE

ILLINOIS DEPARTMENT OF TRANSPORTATION
F.A.I. ROUTE 80/94 (KINGERY EXPRESSWAY)
EB & WB INSIDE LANES (MAINLINE) CONSTRUCTION
COOK COUNTY

OVERHEAD SIGN STRUCTURES DN300 PIPE SUPPORT FRAME FOR TYPE III-A ALUMINUM TRUSS II

SCALE: DRAWN BY: NK
DATE: 7/18/2005 CHECKED BY: VCP

TENG & ASSOCIATES, INC.
ENGINEERS/ARCHITECTS/PLANNERS
CHICAGO, ILLINOIS

OS4-A-8aA(M) SPECIAL 11/1/2002

..\MS7R02A.DGN, ..\MB9S02A.DGN BAJZEKKJ
7-12-2005, 10:27:49 T:\DOCUMENT\193750\STRUCT\DGN\MS7D232A.DGN 54 55 56 57 5859 60 61 62 63
1 2 3 4 5 6 7 8 9 10 11 12 13 14 15 16 17 18 19 20 21 22 23 24 25 26 27 28 29 30 31 32 33 34 35 36 37 38 39 40 41 42 43 44 45 46 47 48 49 50 51 52 53