F.A.I. RTE.	SECTION	COUNTY	TOTAL SHEETS	SHEET NO.
80/94	*	COOK	631	469
STA.		TO STA.		
FED. ROAD DIST. NO.		ILLINOIS	FED. AID PROJECT	

* (2425 & 2626) R-2 CONTRACT NO. 62111

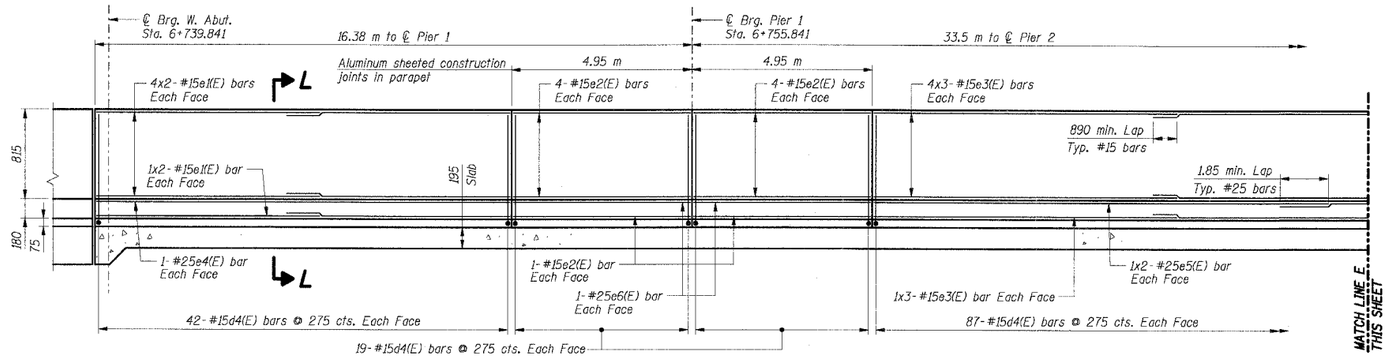

INSIDE ELEVATION OF MEDIAN PARAPET

(North Interior Parapet shown, South Interior parapet opposite hand)

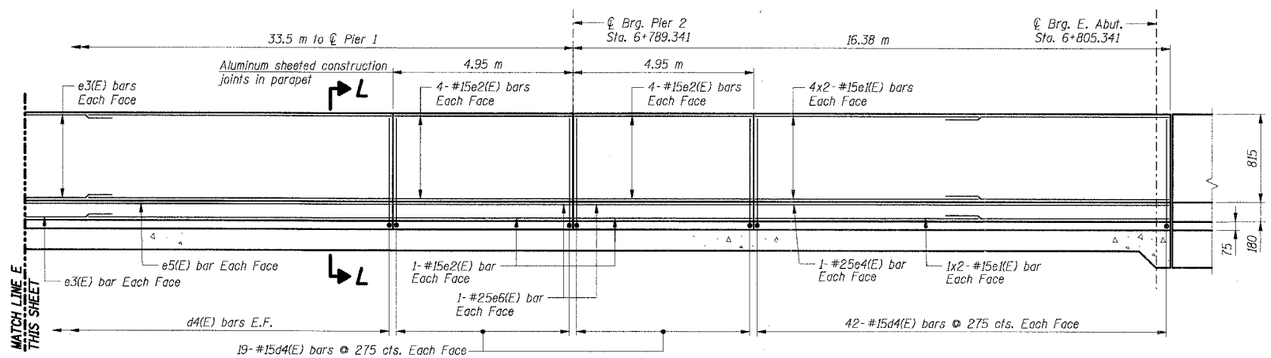

INSIDE ELEVATION OF MEDIAN PARAPET

(North Interior Parapet shown, South Interior parapet opposite hand)

BAR LIST

(For Each Parapet)

Bar	No.	Size	Length (m)	Shape
d4(E)	247	#15	1.10	
e1(E)	40	#15	6.15	
e2(E)	40	#15	4.85	
e3(E)	30	#15	8.45	
e4(E)	4	#25	11.35	
e5(E)	4	#25	12.75	
e6(E)	8	#25	4.85	

BILL OF MATERIAL

(For Each Parapet)

Item	Unit	Total
Concrete Structures	Cu m	30.0
Reinforcement Bars, Epoxy Coated	kg	2,050
Preformed Joint Seal 64 mm	Meter	66.3 **

**Quantity for PJS 64 mm shall not be doubled

Notes:

1. All dimensions are in millimeters (mm) except as noted.
2. Reinforcement bars designated (E) shall be epoxy coated.
3. Bars indicated thus 74x10-#15 etc. indicates 74 lines of bars with 10 lengths per line
4. Work this Sheet with Shts. BS-15 thru BS-23.
5. I.F. Denotes Inside Face
   O.F. Denotes Outside Face.
6. All edges shall have a 20 mm chamfer unless noted otherwise.

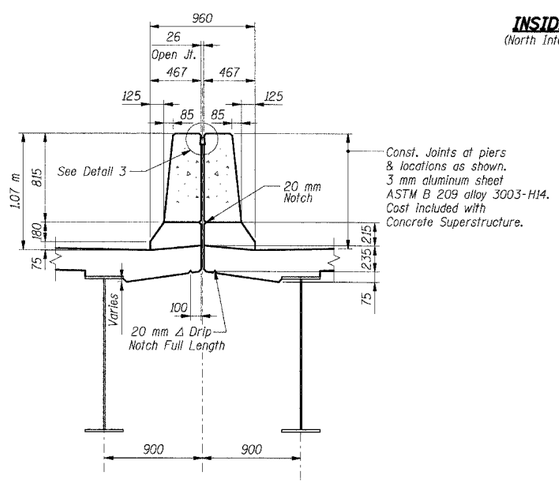

SECTION L-L

(Showing Geometry)

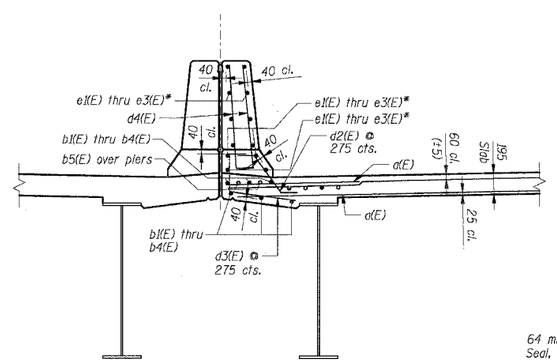

SECTION L-L

(Showing Reinforcement)

*Indicates for location of bars, for identification and quantity, see Parapet Sections

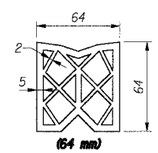

PREFORMED JOINT SEAL

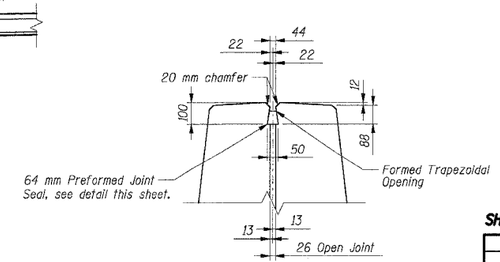

DETAIL 3

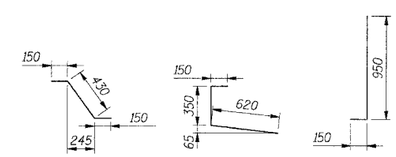

Bar d2(E) Bar d3(E) d4(E)

SHT. BS-27 OF 60

REVISIONS	
NAME	DATE

ILLINOIS DEPARTMENT OF TRANSPORTATION
F.A.I. ROUTE 80/94 (KINGERY EXPRESSWAY)
EB & WB INSIDE LANES (MAINLINE) CONSTRUCTION
I-80/94 OVER BURNHAM AVENUE
STRUCTURE NO. 016-2791 STA. 6+772.591
SECTION 1977-121-R
COOK COUNTY

MEDIAN PARAPET ELEVATION & DETAILS

DATE: 7/18/2005

DRAWN BY: LAR
CHECKED BY: MJK

TENG & ASSOCIATES, INC.
ENGINEERS/ARCHITECTS/PLANNERS
CHICAGO, ILLINOIS

BAUZEKKJ
575859 6061 6263
\SL996012A.DGN, \A996012A.DGN
7-12-2005, 10:26:42 T:\DOCUMENT\93750\STRUCT\DGN\SUT6T12A.DGN
1 2 3 4 5 6 7 8 9 10 11 12 13 14 15 16 17 18 19 20 21 22 23 24 25 26 27 28 29 30 31 32 33 34 35 36 37 38 39 40 41 42 43 44 45 46 47 48 49 50 51 52 53 54 55 56 57 58 59 60 61 62 63