ROUTE NO.	SECTION	COUNTY	TOTAL SHEETS	SHEET NO.
840	(122BR) BR	VERMILION	25	13
FED. ROAD DIST. NO.	ILLINOIS	FED. AID PROJECT-		

SHEET NO. 6
6 SHEETS

Contract #70381

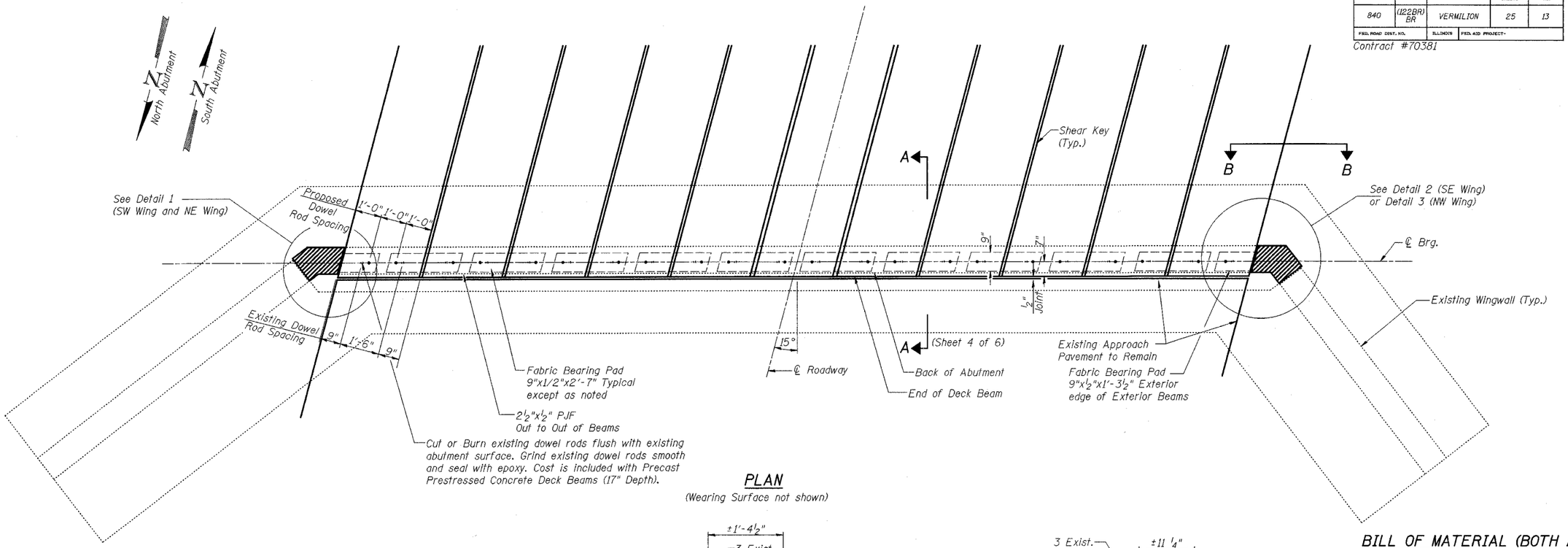

PLAN

(Wearing Surface not shown)

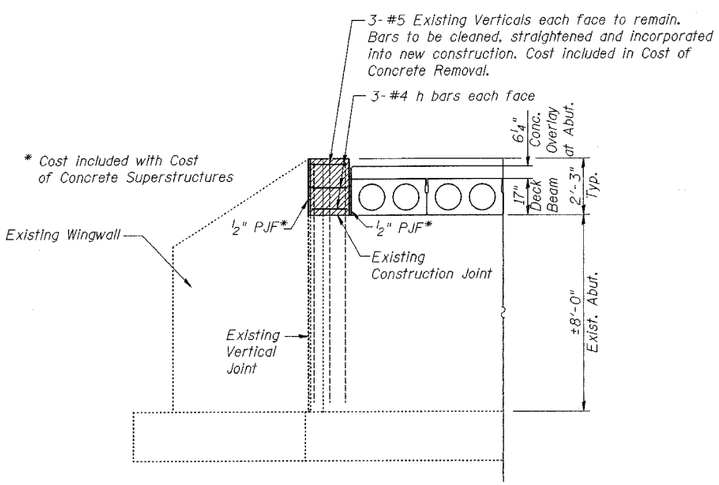

SECTION B-B
TYPICAL ELEVATION AT HATCHED AREA

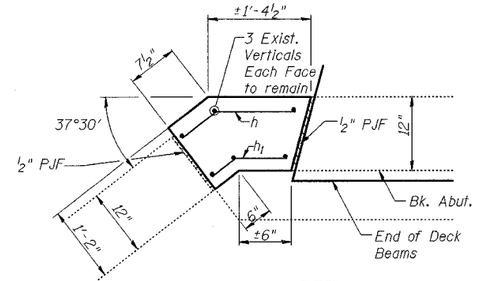

DETAIL 1

At SW Wingwall
At NE Wingwall

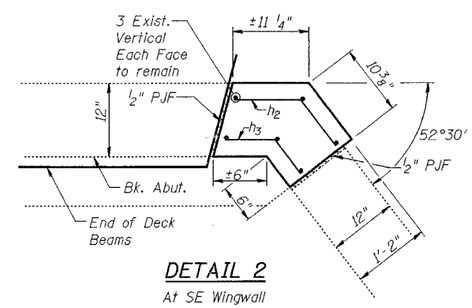

DETAIL 2

At SE Wingwall

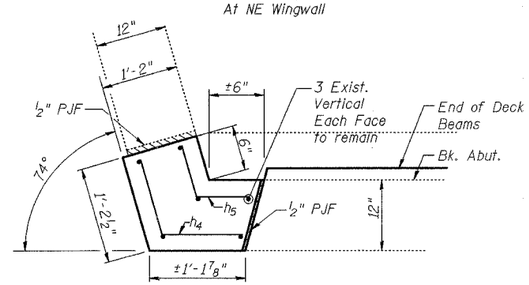

DETAIL 3

At NW Wingwall

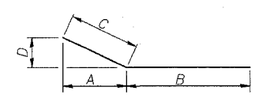

h BARS

BAR	A	B	C	D
h(E)	4 3/4"	1'-1"	6"	3 5/8"
h_1(E)	4"	5"	5"	3"
h_2(E)	4 1/4"	9"	8"	6 3/8"
h_3(E)	3"	5"	5"	4"
h_4(E)	3"	11"	11"	10 5/8"
h_5(E)	1 3/8"	5"	5"	4 7/8"

BILL OF MATERIAL (BOTH ABUT'S)

BAR	NO.	SIZE	LENGTH	SHAPE
h(E)	6	#4	1'-7"	
h_1(E)	6	#4	10"	
h_2(E)	3	#4	1'-5"	
h_3(E)	3	#4	10"	
h_4(E)	3	#4	1'-10"	
h_5(E)	3	#4	10"	
Reinforcement Bars, Epoxy Coated			Pound	20
Concrete Removal			Cu. Yd.	0.5
Concrete Structures			Cu. Yd.	0.5

NOTES

Hatched areas indicate concrete removal. These areas are to be poured after concrete wearing surface is in place and cured.

Reinforcement bars designated (E) shall be epoxy coated.

ILLINOIS DEPARTMENT OF TRANSPORTATION

ABUTMENTS

IL ROUTE 49 OVER
FAST CREEK
F.A.P. ROUTE 840 SECTION (122BR)BR
VERMILION COUNTY
STATION 1281+10.00
STRUCTURE NO. 092-0174

DATE: JUNE 2005

DRAWN BY: NJV/MLO
CHECKED BY: SJK

BLANK, WESSELINK, COOK & ASSOCIATES ENGINEERS - CONSULTANTS DECATUR, ILLINOIS