STATE OF ILLINOIS
DEPARTMENT OF TRANSPORTATION

| ROUTE NO. | SECTION | COUNTY | TOTAL SHEETS | SHEET NO. |
|---|---|---|---|---|
| FAP 314 | 111BR-I | MADISON | 123 | 98 |
| FED. ROAD DIST. NO. 7 | | ILLINOIS | FED. AID PROJECT- | |

SHEET NO. 8
17 SHEETS

Contract No. 76454

## MIN. BAR LAPS

#5 bar = 1'-8"
#8 bar = 3'-5"

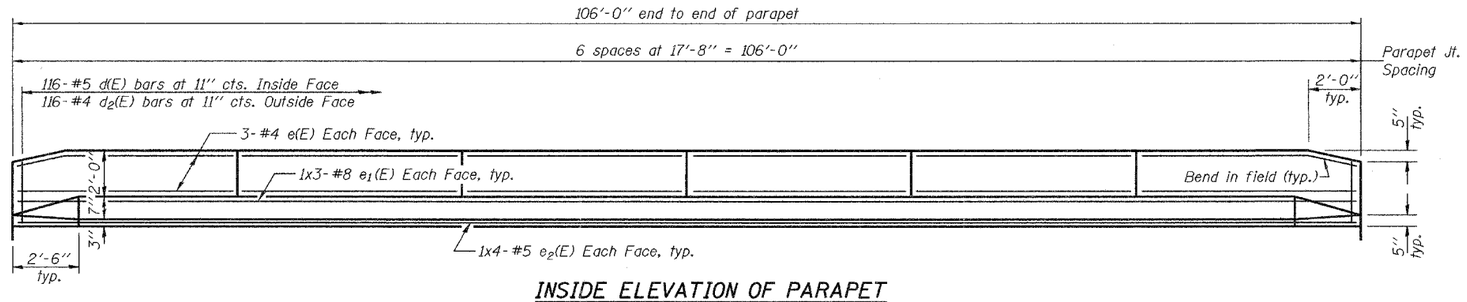


## INSIDE ELEVATION OF PARAPET

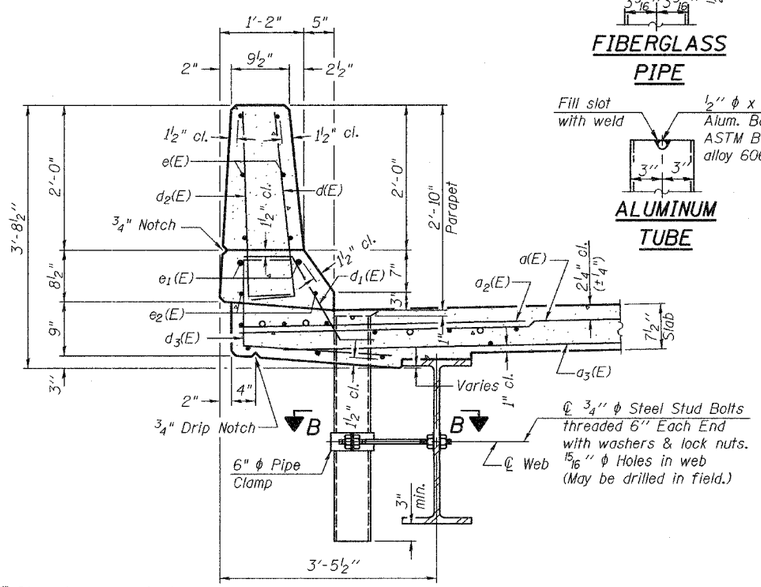


## SECTION THRU PARAPET

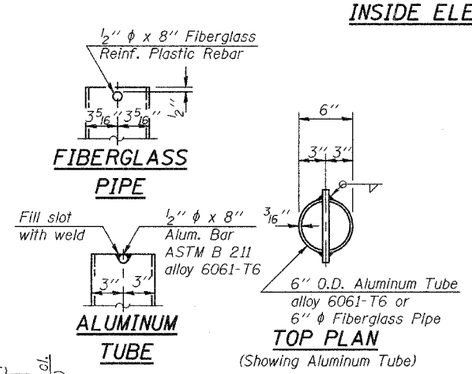


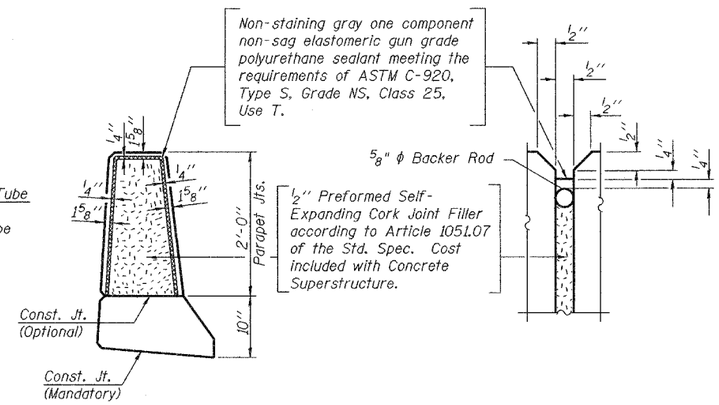


## PARAPET JOINT DETAILS

Notes:

The exterior surfaces of the floor drains shall be painted with the finish coat as specified in the special provisions for Cleaning and Painting New Metal Structures. The exterior surfaces of the drains shall be cleaned according to Steel Structures Painting Council's Spec. SSPC-SP1 prior to painting.

Fiberglass pipe shall conform to ASTM D 2996, with short-time rupture strength hoop tensile stress of 30,000 p.s.i. minimum.

## SUPERSTRUCTURE BILL OF MATERIAL

| Bar | No. | Size | Length | Shape |
|---|---|---|---|---|
| a(E) | 392 | #5 | 21'-0" | |
| a1(E) | 8 | #5 | 23'-8" | |
| a2(E) | 392 | #6 | 6'-0" | |
| a3(E) | 284 | #5 | 20'-6" | |
| | | | | |
| b(E) | 184 | #5 | 27'-9" | |
| b1(E) | 210 | #5 | 22'-9" | |
| | | | | |
| d(E) | 232 | #5 | 3'-0" | |
| d1(E) | 220 | #5 | 2'-5" | |
| d2(E) | 232 | #4 | 3'-0" | |
| d3(E) | 232 | #4 | 3'-11" | |
| d4(E) | 12 | #5 | 2'-7" | |
| | | | | |
| e(E) | 72 | #4 | 17'-3" | |
| e1(E) | 12 | #8 | 37'-9" | |
| e2(E) | 16 | #5 | 27'-9" | |
| | | | | |
| m(E) | 8 | #6 | 23'-9" | |
| m1(E) | 12 | #6 | 24'-6" | |
| m2(E) | 24 | #6 | 10'-0" | |
| m3(E) | 8 | #6 | 7'-11" | |
| m4(E) | 8 | #6 | 3'-7" | |
| | | | | |
| s(E) | 84 | #5 | 7'-9" | |
| s1(E) | 72 | #4 | 12'-0" | |
| | | | | |
| v(E) | 84 | #5 | 4'-1" | |
| | | | | |
| Reinforcement Bars, Epoxy Coated | | | Pound | 36420 |
| Concrete Superstructure | | | Cu. Yds. | 172.0 |
| Bar Splicers (E) | | | Each | 438 |

Reinforcement bars designated (E) shall be epoxy coated.

Bars indicated thus 1 x 3-#5 etc. indicates 1 line of bars with 3 lengths per line.

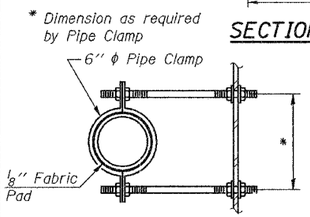


## SECTION B-B

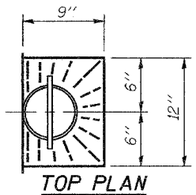


## TOP PLAN

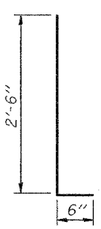


## BARS d(E) & d2(E)

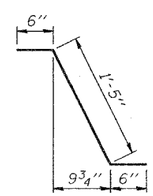


## BAR d1(E)

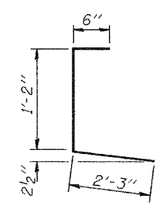


## BAR d3(E)

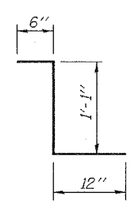


## BAR d4(E)

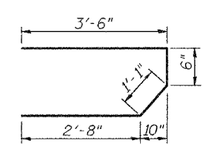


## BAR s(E)

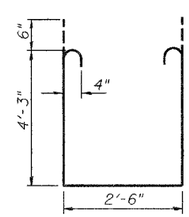


## BAR s1(E)

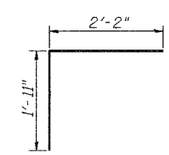


## BAR v(E)

| | |
|---|---|
| DESIGNED | CEH |
| CHECKED | DHC |
| DRAWN | BECKY M. LEACH |
| CHECKED | CEH & DHC |

November 10, 2005
EXAMINED Thomas J. Domagalski
ENGINEER OF BRIDGE DESIGN
PASSED Ralph E. Anderson
ENGINEER OF BRIDGES AND STRUCTURES

## SUPERSTRUCTURE DETAILS
## F.A.P. ROUTE 314 - SECTION 111BR-I
## MADISON COUNTY
## STATION 161+40.00
## STRUCTURE NO. 060-0339

...\projects\bm100029\060039.dgn 12/10/2005 8:58:25 AM