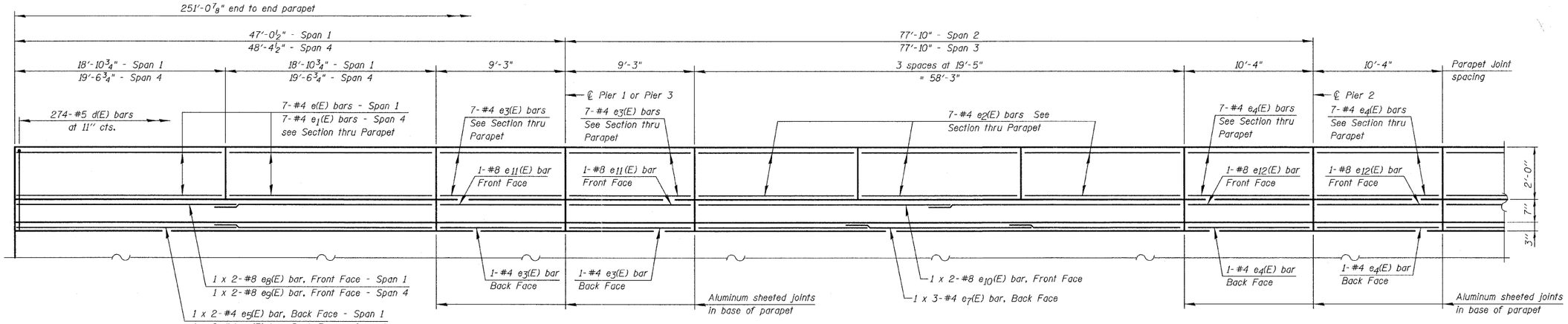

INSIDE ELEVATION OF PARAPET

(2 thus)

MINIMUM BAR LAP

(Parapet)
#4 bar = 2'-0"
#8 bar = 5'-2"

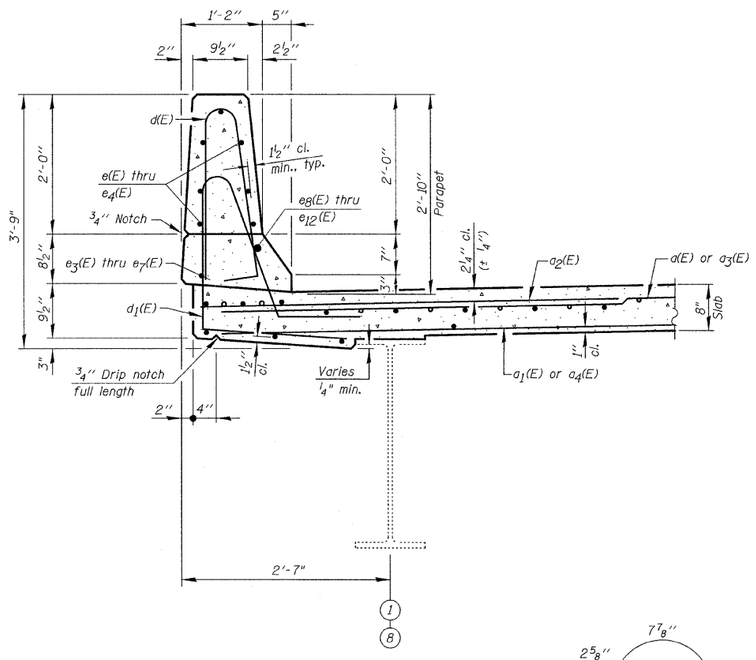

SECTION THRU PARAPET

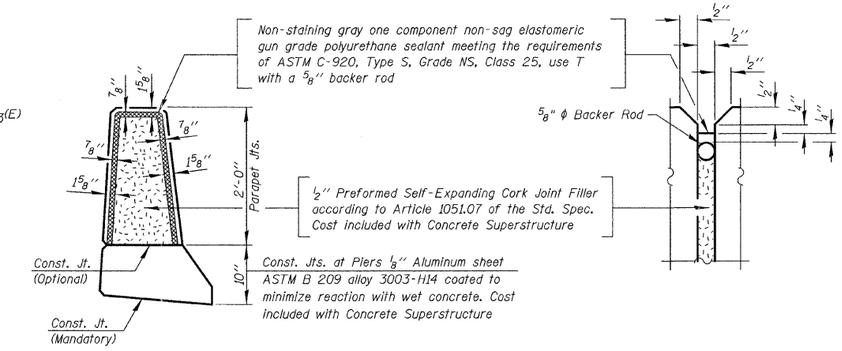

PARAPET JOINT DETAILS

SUPERSTRUCTURE BILL OF MATERIAL

Bar	No.	Size	Length	Shape
d(E)	376	#5	17'-11"	——
a1(E)	301	#5	23'-5"	——
a2(E)	378	#6	6'-6"	——
a3(E)	376	#5	27'-2"	——
a4(E)	301	#5	21'-1"	——
a5(E)	4	#5	25'-11"	——
b(E)	460	#5	27'-4"	——
b1(E)	129	#6	30'-0"	——
b2(E)	342	#5	30'-1"	——
b3(E)	129	#6	11'-10"	——
d(E)	548	#5	5'-7"	⌊
d1(E)	548	#5	7'-3"	⌊
e(E)	28	#4	18'-7"	——
e1(E)	28	#4	19'-3"	——
e2(E)	42	#4	19'-2"	——
e3(E)	64	#4	9'-0"	——
e4(E)	32	#4	10'-1"	——
e5(E)	4	#4	19'-9"	——
e6(E)	4	#4	20'-5"	——
e7(E)	12	#4	20'-8"	——
e8(E)	4	#8	21'-4"	——
e9(E)	4	#8	22'-0"	——
e10(E)	8	#8	31'-7"	——
e11(E)	8	#8	9'-0"	——
e12(E)	4	#8	10'-1"	——

Bar	No.	Size	Length	Shape
m(E)	32	#6	26'-4"	——
m1(E)	16	#6	10'-3"	——
m2(E)	16	#6	7'-8"	——
m3(E)	8	#6	2'-1"	——
m4(E)	8	#6	4'-4"	——
m5(E)	4	#6	2'-4"	——
m6(E)	4	#6	12'-7"	——
m7(E)	8	#6	5'-11"	——
s(E)	102	#5	7'-10"	⊐
s1(E)	88	#4	9'-2"	⊔
u(E)	100	#4	3'-3"	⊔
v(E)	86	#5	3'-9"	⌐
Reinforcement Bars, Epoxy Coated		Pound	82,150	
Concrete Superstructure		Cu. Yds.	391.0	
Bar Splicers		Each	92	

Bars indicated thus 1 x 2-#8 etc. indicates 1 line of bars with 2 lengths per line.

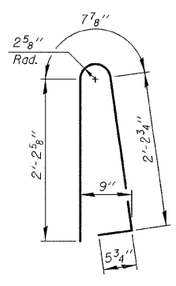

BAR d(E)

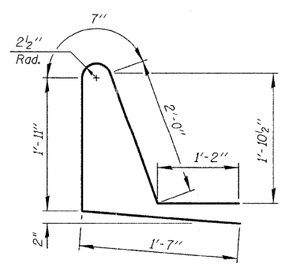

BAR d1(E)

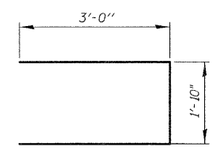

BAR s(E)

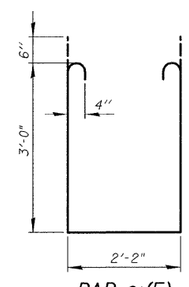

BAR s1(E)

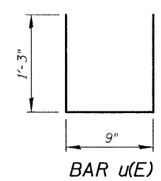

BAR u(E)

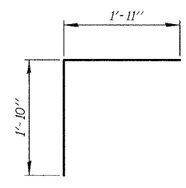

BAR v(E)

FILE NAME = I:\102909_Central Ave\Structural\CADD Sheets\D16OP17-10-superst_det-1.dgn

CHRISTIAN-ROGE & ASSOCIATES, INC.	USER NAME = IDOT	DESIGNED - J.C.N./B.N.S.	REVISED -
		CHECKED - B.N.S.	REVISED -
	PLOT SCALE = 50.000000 ' / IN.	DRAWN - F.M.	REVISED -
	PLOT DATE = 12/10/2011	DATE - DECEMBER 9, 2011	REVISED -

STATE OF ILLINOIS
DEPARTMENT OF TRANSPORTATION

SUPERSTRUCTURE DETAILS-I
STRUCTURE NO. 016-2458

SHEET NO. S10 OF S24 SHEETS

F.A.I. RTE.	SECTION	COUNTY	TOTAL SHEETS	SHEET NO.
80	1415-803HB-R	COOK	51	25
		CONTRACT NO. 60P17		
		ILLINOIS FED. AID PROJECT		