Bench Marks: Chiseled "□" on light pole foundation at S.W. corner Russell Road & I-94 NB exit. Elev. 742.89.
Chiseled "□" on N. curb of Russell Road approximately 90 feet W. of I-94 SB exit. Elev. 753.76

Existing Structure: S.N. 049-0089 was built in 1959 by the Illinois Department of Transportation. The existing structure has three simple spans, with a length of 147'-10¾" from back-to-back of abutments, and a constant out-to-out width of 35'-2". The superstructure consists of a 9" thick reinforced concrete deck built composite with 42" deep PPC I-beams. The substructure consists of two stub abutments on concrete piles and two multi-column shoulder piers on spread footings. The existing bridge is to be removed and replaced. Russell Road is to be closed to traffic during construction of new bridge.

No Salvage.

STATE OF ILLINOIS
BRIAN L. UMBRIGHT
081-005584
CHICAGO, ILLINOIS
LICENSED STRUCTURAL ENGINEER

APPROVED
FOR STRUCTURAL ADEQUACY ONLY
ENGINEER OF BRIDGES AND STRUCTURES

SIGNED: Brian L. Umbright
DATE: November 29, 2011
EXPIRES: November 30, 2012

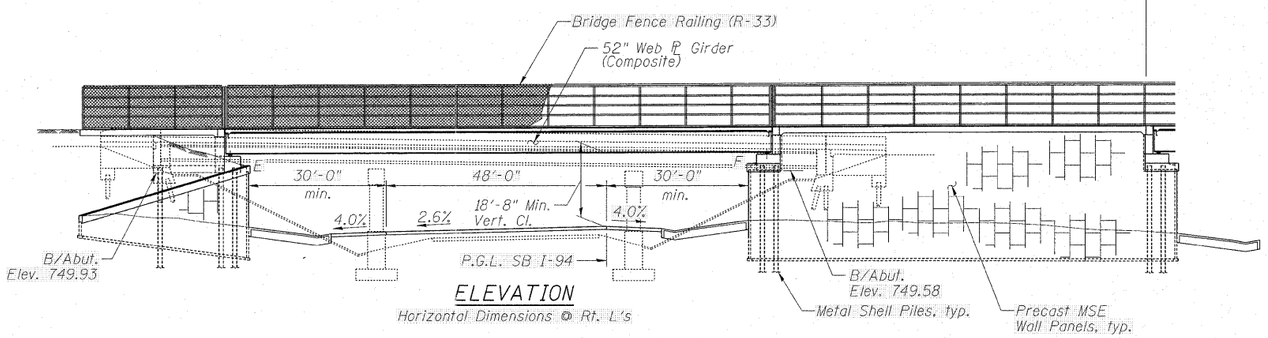

ELEVATION
Horizontal Dimensions @ Rt. L's

DESIGN SPECIFICATIONS

2010 AASHTO LRFD Bridge Design Specifications with 2010 Interims

DESIGN STRESSES

FIELD UNITS

f'c = 3,500 psi
fy = 60,000 psi (Reinforcement)
fy = 36,000 psi (AASHTO M270 Grade 36)
fy = 50,000 psi (AASHTO M270 Grade 50)

LOADING HL-93

Allow 50#/sq. ft. for future wearing surface.

SEISMIC DATA

Seismic Performance Zone (SPZ) = 1
Design Spectral Acceleration at 1.0 sec. (S_{D1}) = 0.074g
Design Spectral Acceleration at 0.2 sec. (S_{DS}) = 0.117g
Soil Site Class = D

A SUE investigation is being performed. All utilities will be relocated as necessary.

These plans are for the fabrication of the structural steel and bearings. All work shown that is not related to the fabrication is identified as "Not Included in this Contract" or "For Information Only".

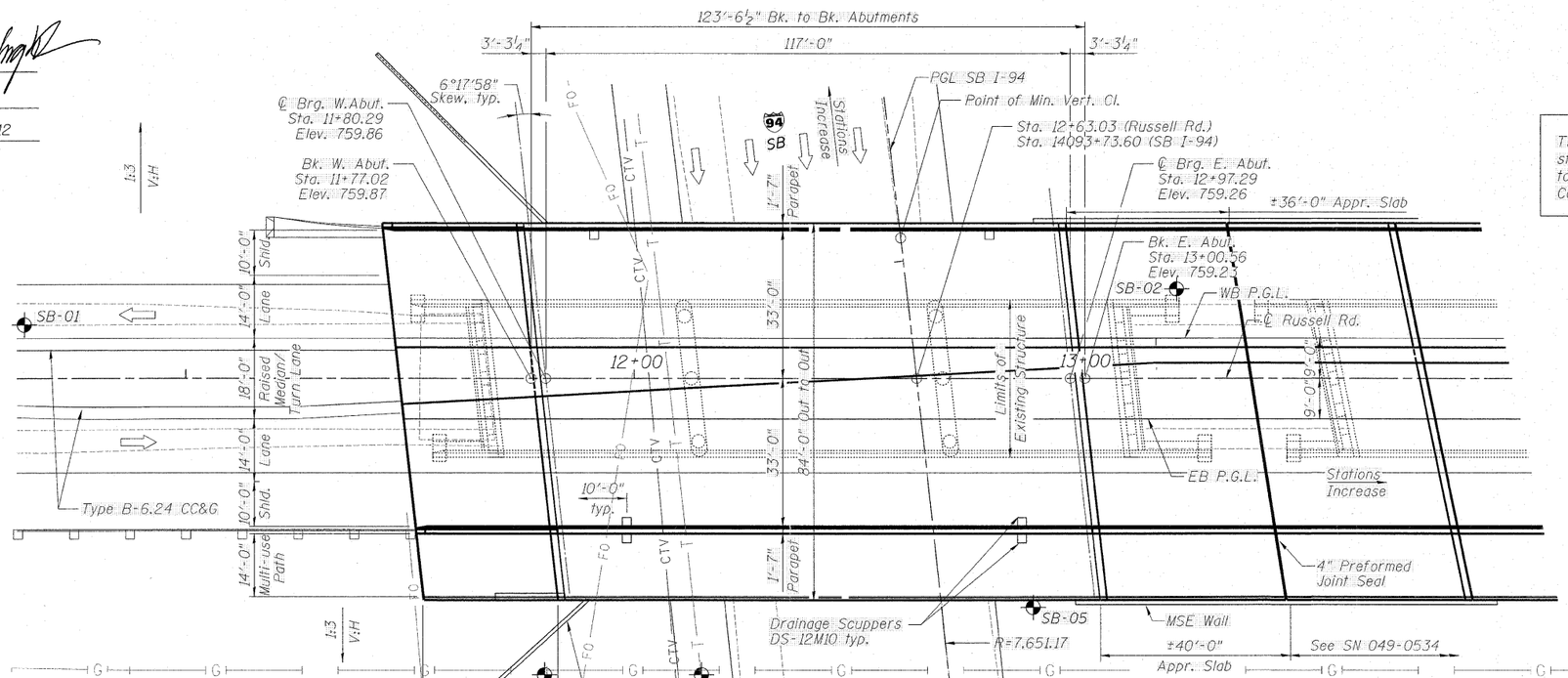

PLAN

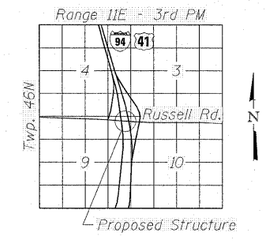

LOCATION SKETCH

CURVE DATA

(SB I-94)

P.I. = Sta. 14096+54.48
Δ = 20°33'20" LT
D = 0°44'56"
R = 7,651.17'
L = 2,744.97'
T = 1387.40
E = 124.77'
e = 2.6%
P.C. = Sta. 14082+67.09
P.T. = Sta. 14110+12.05

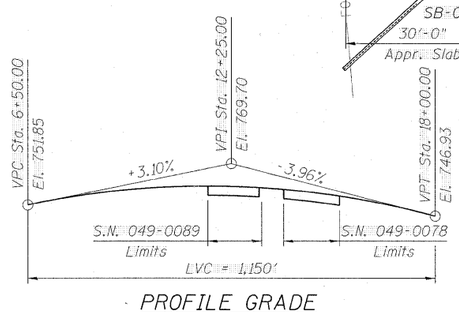

PROFILE GRADE
(Russell Rd.)

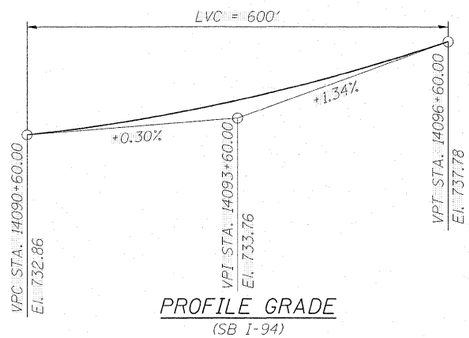

PROFILE GRADE
(SB I-94)

GENERAL PLAN & ELEVATION
RUSSELL ROAD OVER SOUTHBOUND I-94
F.A.U. RTE. 1199 - SEC. 2011-056-F
LAKE COUNTY
STATION 12+63.03
STRUCTURE NO. 049-0533

BOWMAN, BARRETT & ASSOCIATES INC.
CONSULTING ENGINEERS
Chicago, Illinois
312.228.0100
www.bbandainc.com

FILE NAME =	USER NAME =	DESIGNED - MRM	REVISED -
		CHECKED - TL	REVISED -
	PLOT SCALE = N.T.S.	DRAWN - MTR	REVISED -
	PLOT DATE = 12/6/2011	CHECKED - DF	REVISED -

STATE OF ILLINOIS
DEPARTMENT OF TRANSPORTATION

SHEET NO. OF SHEETS

F.A.U RTE.	SECTION	COUNTY	TOTAL SHEETS	SHEET NO.
1199	2011-056-F	LAKE	19	3
		CONTRACT NO. 60P69		
		ILLINOIS FED. AID PROJECT		

12/6/2011 5:45:08 PM
s:\BDI\05_CADD\60P69_Russell Fabrication\60P69 Sheets\049D089-60P69-002-GPE.dgn