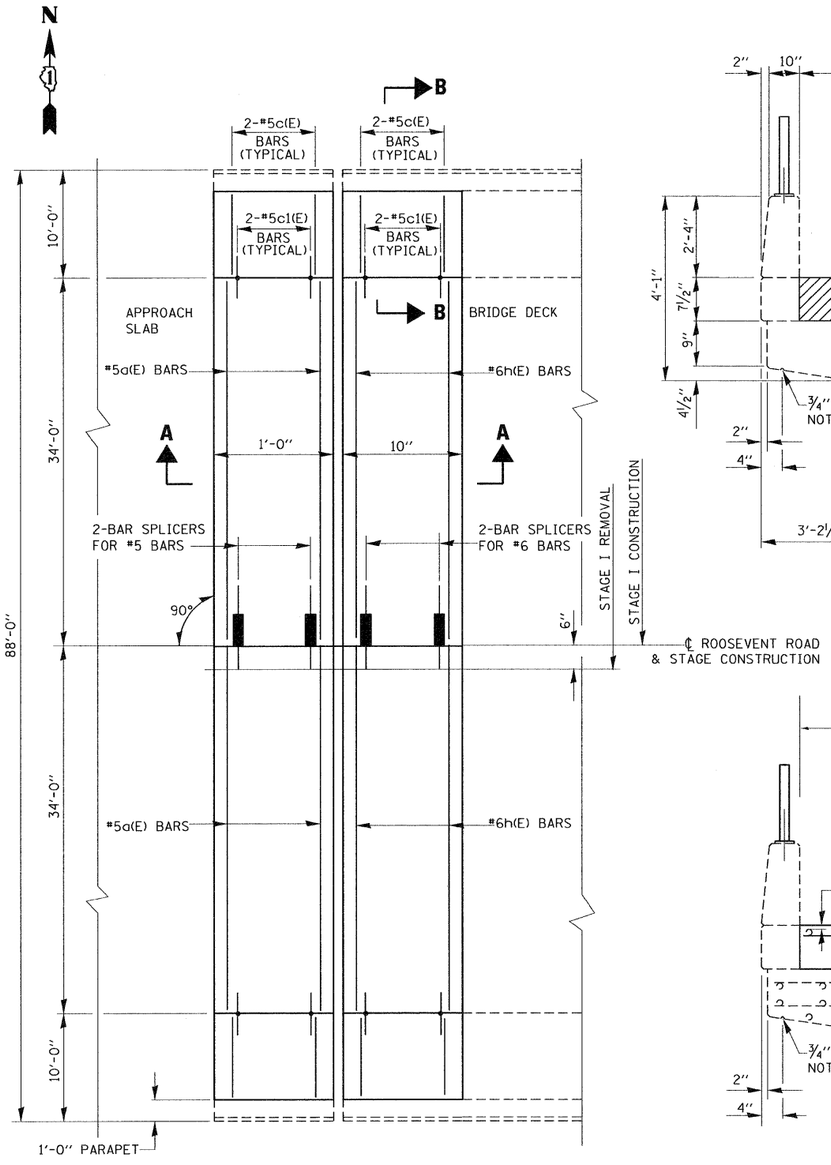

PLAN

WEST ABUTMENT SHOWN (EAST ABUTMENT SIMILAR BY 180')

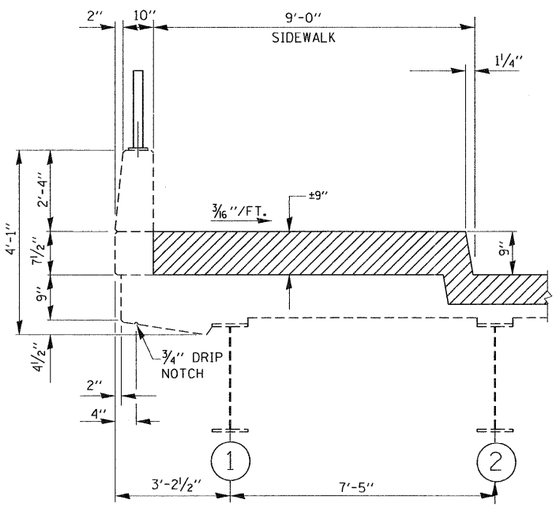

SECTION B–B
(EXISTING)

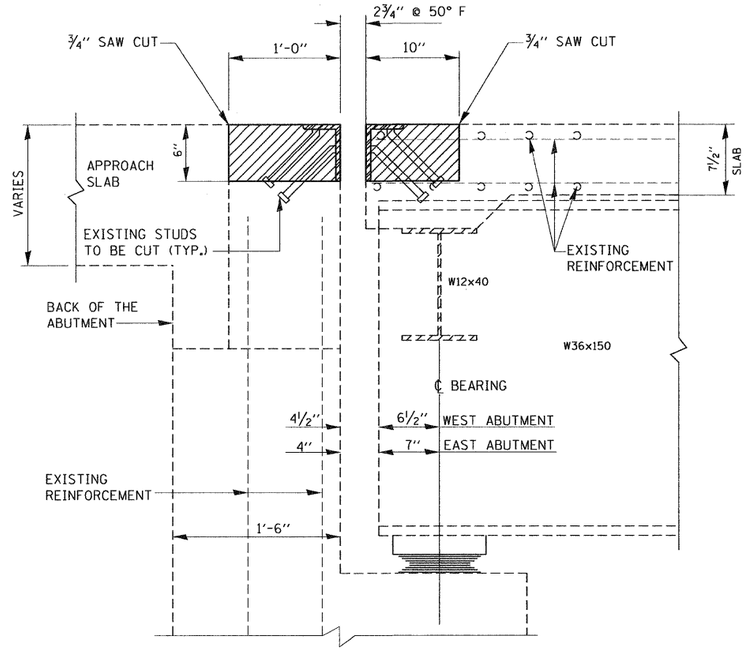

SECTION A–A
(EXISTING)

BILL OF MATERIALS

BAR	NO.	SIZE	LENGTH	SHAPE
a(E)	8	#5	33'-9"	
h(E)	8	#6	33'-9"	
c(E)	37	#5	8'-9"	
c1(E)	16	#5	2'-5"	
b(E)	9	#5	14'-8"	
b1(E)	9	#5	5'-2"	
REINFORCEMENT BARS (EPOXY COATED)			POUND	940
CONCRETE REMOVAL			CU.YD.	20.7
CONCRETE SUPERSRTUCTURE			CU.YD.	20.7
BAR SPLICERS			EACH	8
PROTECTIVE COAT			SQ. YD.	2001

LEGEND:

HATCHED AREA INDICATES CONCRETE REMOVAL

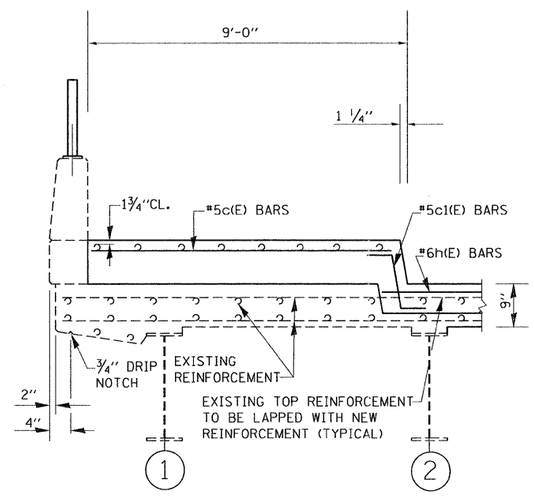

SECTION B–B
(PROPOSED)

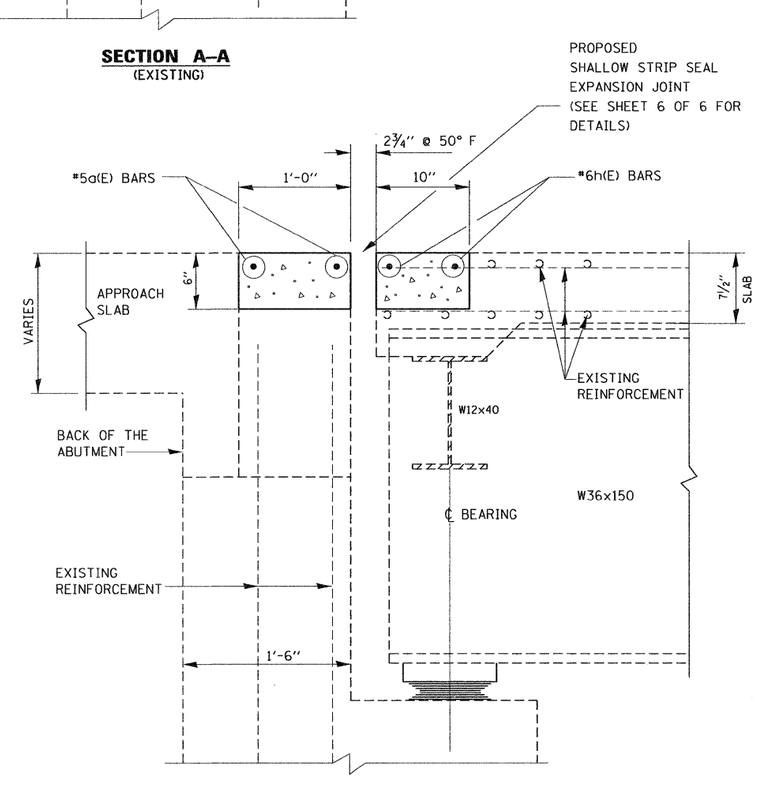

SECTION A–A
(PROPOSED)

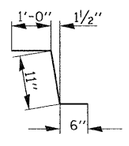

BAR c1(E)

FILE NAME = c:\pw_work\pwidot\patelar\d0281223\D162701-sht-plan.dgn	USER NAME = patelar	DESIGNED - ANAND PATEL	REVISED -
		DRAWN - MARK V. TINIAKOS	REVISED -
	PLOT SCALE = 50.0000 ' / in.	CHECKED - ANAND PATEL	REVISED -
	PLOT DATE = 12/13/2011	DATE - 11/02/11	REVISED -

STATE OF ILLINOIS
DEPARTMENT OF TRANSPORTATION

I-90/94 (DAN RYAN EXPRESSWAY) AT ROOSEVELT ROAD
DECK SLAB AND APPROACH SLAB DETAILS
S.N. 016-0478

SCALE: | SHEET NO. 3 OF 6 SHEETS | STA. | TO STA.

F.A.I. RTE.	SECTION	COUNTY	TOTAL SHEETS	SHEET NO.
90/94	2011-070-I	COOK	27	10
		CONTRACT NO. 60P89		
		ILLINOIS FED. AID PROJECT		