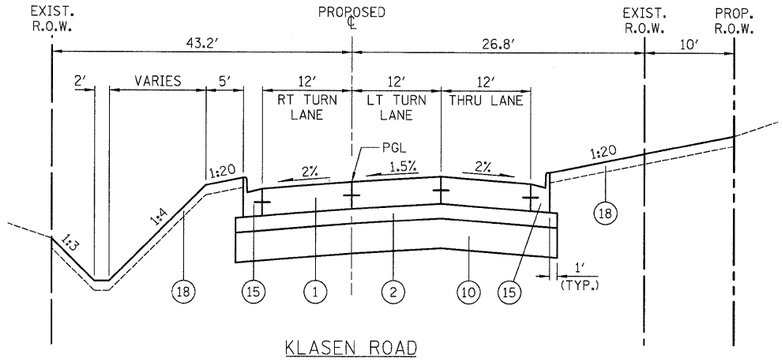

KLASEN ROAD

STA. 0+90.00 TO STA. 101+18.00

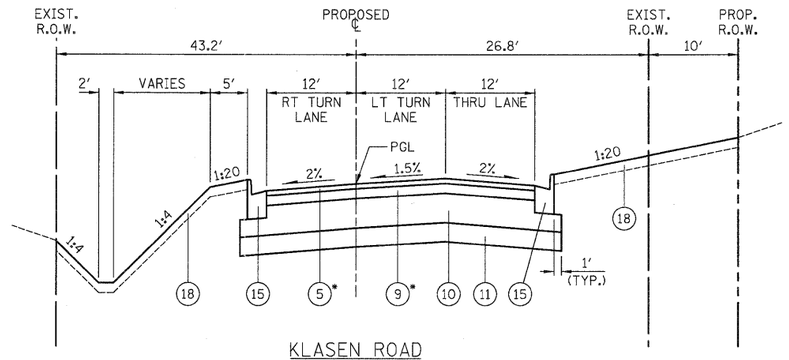

KLASEN ROAD

STA. 101+18.00 TO STA. 103+80.00

* PAID FOR AS HOT-MIX ASPHALT PAVEMENT (FULL DEPTH), 6"

PROPOSED LEGEND

1. PORTLAND CEMENT CONCRETE PAVEMENT, 10" (JOINTED)
2. SUB-BASE GRANULAR MATERIAL, TYPE B, 6"
3. POLYMERIZED HOT-MIX ASPHALT SURFACE COURSE, MIX "F", N90 (IL 9.5mm), 1 3/4"
4. POLYMERIZED HOT-MIX ASPHALT BINDER COURSE, IL-19.0, N90, 12 1/4"
5. HOT-MIX ASPHALT SURFACE COURSE, MIX "D", N70, 2"
6. HOT-MIX ASPHALT BINDER COURSE, IL-19.0, N70, 2"
7. HOT-MIX ASPHALT BINDER COURSE, IL-19.0, N50, 11 1/2"
8. HOT-MIX ASPHALT SURFACE COURSE, MIX "D", N50, 2"
9. HOT-MIX ASPHALT BINDER COURSE, IL-19.0, N50, 4"
10. AGGREGATE SUBGRADE, 12"
11. POROUS GRANULAR EMBANKMENT, SUBGRADE, VARIABLE DEPTH - SEE TABLE
12. NUMBER NOT USED
13. CONCRETE MEDIAN, TYPE SB-6.12
14. CONCRETE MEDIAN, TYPE SB-6.24
15. COMBINATION CONCRETE CURB AND GUTTER, B-6.24
16. HOT-MIX ASPHALT SHOULDERS, 6"
17. AGGREGATE SHOULDERS, TYPE B 6"
18. TOPSOIL FURNISH AND PLACE, 4" SEEDING, FERTILIZER, AND EROSION MAT

MIXTURE REQUIREMENT

PAY ITEM	AIR VOIDS @ Ndes
HOT-MIX ASPHALT PAVEMENT (FULL-DEPTH), 6" - KLASEN ROAD, TRINITY DRIVE, AND LINDEN AVENUE	
HOT-MIX ASPHALT SURFACE COURSE, MIX "D", N50 (IL-9.5 mm) (2")	4% @ 50 GYR.
HOT-MIX ASPHALT BINDER COURSE, IL-19.0, N50 (4") (IN 2 LIFTS)	4% @ 50 GYR.
HOT-MIX ASPHALT PAVEMENT (FULL-DEPTH), 13.5" - VIRGINIA ROAD	
HOT-MIX ASPHALT SURFACE COURSE, MIX "D", N70 (IL-9.5 mm) (2")	4% @ 70 GYR.
HOT-MIX ASPHALT BINDER COURSE, IL-19.0, N70 (2")	4% @ 70 GYR.
HOT-MIX ASPHALT BINDER COURSE, IL-19.0, N50 (9 1/2") (IN 4 LIFTS)	4% @ 50 GYR.
HOT-MIX ASPHALT PAVEMENT (FULL-DEPTH), 14" - IL ROUTE 31	
POLYMERIZED HOT-MIX ASPHALT SURFACE COURSE, MIX "F", N90 (IL-9.5mm) (1 3/4")	4% @ 90 GYR.
POLYMERIZED HOT-MIX ASPHALT BINDER COURSE, IL-19.0, N90 (12 1/4") (IN 4 LIFTS)	4% @ 90 GYR.
STABILIZED HOT-MIX ASPHALT PATH	
HOT-MIX ASPHALT SURFACE COURSE, MIX "D", N50 (IL-9.5 mm) (2")	4% @ 50 GYR.
HOT-MIX ASPHALT DRIVEWAY PAVEMENT, 6", 8"	
HOT-MIX ASPHALT SURFACE COURSE, MIX "D", N50 (IL 9.5mm) (2")	4% @ 50 GYR.
HOT-MIX ASPHALT BASE COURSE, (HMA BINDER IL-19mm) (PE-4", CE-6")	4% @ 50 GYR.
TEMPORARY PAVEMENT, 9"	
TEMP PAVEMENT (HMA BINDER IL-19mm) (2")	4% @ 50 GYR.
HOT-MIX ASPHALT BASE COURSE (HMA BINDER IL-19mm) (7") (IN 3 LIFTS)	4% @ 50 GYR.
CLASS D PATCHES, TYPE II, III, AND IV, 10"	
CLASS D PATCH (HMA BINDER IL-19mm) (10") (IN 4 LIFTS)	4% @ 70 GYR.
HOT-MIX ASPHALT SHOULDERS, 6"	
HMA SHOULDER (HMA BINDER IL-19mm) (6") (IN 3 LIFTS)	4% @ 50 GYR.

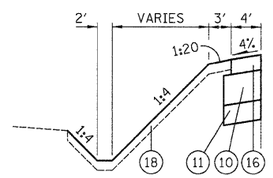

STA. 108+20 TO STA. 108+59.53

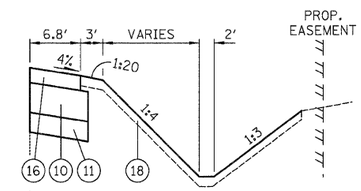

STA. 108+20 TO STA. 108+59.53

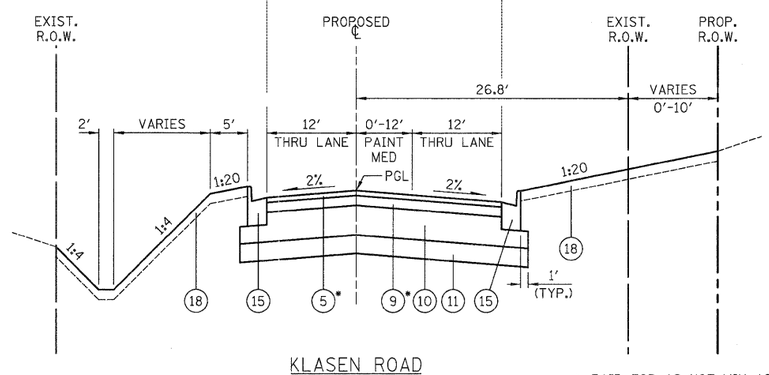

KLASEN ROAD

STA. 103+80.00 TO STA. 108+59.53

* PAID FOR AS HOT-MIX ASPHALT PAVEMENT (FULL DEPTH), 6"

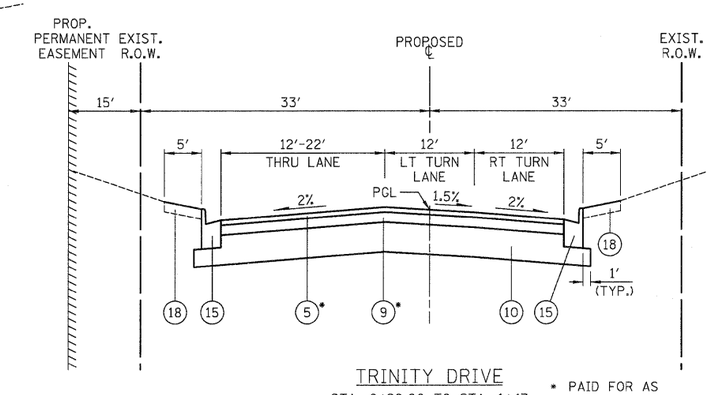

TRINITY DRIVE

STA. 0+90.00 TO STA. 1+47

* PAID FOR AS HOT-MIX ASPHALT PAVEMENT (FULL DEPTH), 6"

NOTES:

1. THE UNIT WEIGHT TO CALCULATE ALL HOT-MIX ASPHALT MIXTURES IS 112 LB/SY-IN.
2. FOR PERCENT OF RAP, SEE DISTRICT ONE SPECIAL PROVISIONS.
3. THE "AC TYPE" FOR POLYMERIZED HMA MIXES SHALL BE "SBS/SBR PG 70-22" AND FOR NON-POLYMERIED HMA, THE "AC TYPE" SHALL BE "PG 64-22" UNLESS MODIFIED BY DISTRICT ONE SPECIAL PROVISIONS.

KLASEN ROAD
POROUS GRANULAR EMBANKMENT, SUBGRADE, VARIABLE DEPTH

STATION	DEPTH	DESCRIPTION
99+00 TO 103+65	12"	PGE, SUBGRADE
103+65 TO 108+59	8"	PGE, SUBGRADE

STRUCTURAL PAVEMENT DESIGN INFORMATION BLOCK FOR KLASEN ROAD

STRUCTURAL TRAFFIC: YEAR 2021

PV = 2972 SU = 30 MU = 30

ROAD/STREET CLASSIFICATION: CLASS II

P = 50% S = 50% M = 50%

TRAFFIC FACTOR: ACTUAL TF = 0.08

MINIMUM TF = N/A

AC GRADE: BINDER = PG 64-22 SURFACE = PG 64-22

SUBGRADE SUPPORT RATING:

SSR = POOR