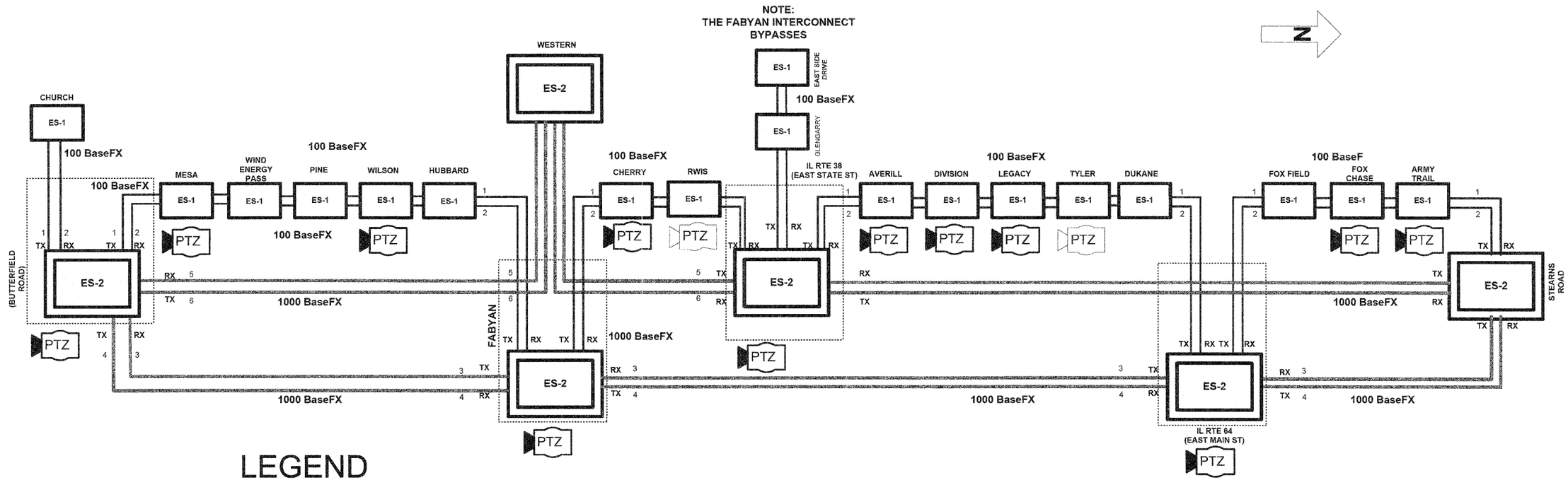

LEGEND

EXISTING | PROPOSED

ETHERNET SWITCH – TYPE 2

ETHERNET SWITCH – TYPE 1

PTZ — PAN/TILT/ZOOM CCTV CAMERA
(SEE CABINET DETAIL AND FIBER OPTIC SPLICING DIAGRAMS FOR DETAILS)

FIBER OPTIC CONNECTION

CAT 6 CONNECTION

CONTROL CABINET

3 — FIBER NUMBER

RX — RECEIVE (CONNECTION ON GBIC MODULE)

TX — TRANSMIT (CONNECTION ON GBIC MODULE)

NOTES

1. THE CONTRACTOR SHALL PROVIDE SOFTWARE ON A LAPTOP COMPUTER TO EMULATE THE OPERATIONS AT THE TRAFFIC MANAGEMENT CENTER. USING THE LAPTOP, THE CONTRACTOR WILL DEVELOP AND EXECUTE A TEST PLAN THAT DEMONSTRATES THAT ALL DEVICES, INSTALLED AS PART OF THIS PROJECT CAN BE CONTROLLED AT WESTERN USING THE NEW COMMUNICATIONS NETWORK..

2. THE TEST PLAN SHALL BE SUBMITTED TO THE ENGINEER FOR APPROVAL A MINIMUM OF 30 DAYS PRIOR TO ANY TESTING.

JACOBS
ONE NORTH FRANKLIN
CHICAGO IL. 60606
312-251-3000

USER NAME =	DESIGNED - CH	REVISED -	
	DRAWN - MO, DI	REVISED -	
PLOT SCALE =	CHECKED - KG	REVISED -	
PLOT DATE = 11/3/2011	DATE - #DATE	REVISED -	

KANE COUNTY
DIVISION OF TRANSPORTATION

FIBER OPTIC NETWORK

SCALE: | SHEET NO. OF SHEETS | STA. TO STA.

F.A.P. RTE.	SECTION	COUNTY	TOTAL SHEETS	SHEET NO.
360	10-00403-00-TL	KANE	72	65
		CONTRACT NO. 63648		
FED. ROAD DIST. NO.	ILLINOIS	FED. AID PROJECT		

P:_2011\C9X96780\700 CADD & GIS Files\700 Civil\Sheet\Z71_CABINET_FIBER SPLICING DIAGRAM.DGN
11/3/2011