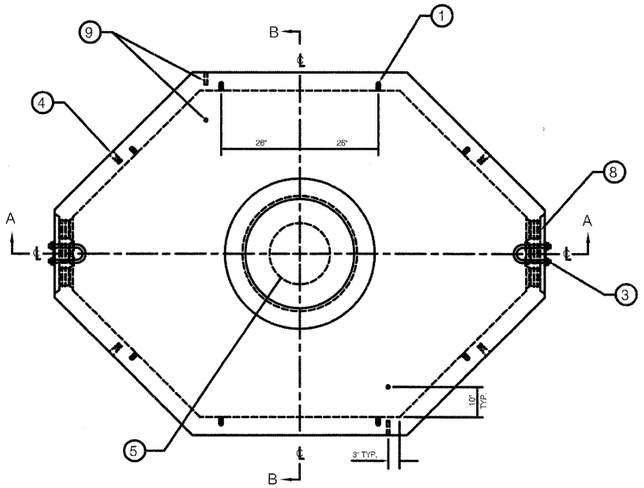

PLAN VIEW

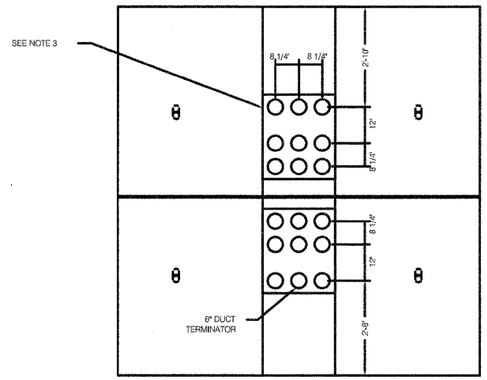

6" DUCT TERMINATOR

ENDWALL SHOWN

NOTES:

1. CONCRETE: 4500 psi @ 28 DAYS,5%-8% ENTRAINED AIR, 4" MAX. SLUMP.
2. REBAR: ASTM A-615 GRD. 60. SEE DRAWING No. 126.9.9E.SCE 2/2
3. DUCT ENTRANCE: SINGLE DUCT TERMINATORS TO ACCEPT 6" DIAMETER SCH. 40 PVC CONDUIT. SEE DETAIL THIS SHEET.
4. PULLING IRON: SEE DRAWING No. NED.MISC.DTLS 1/1 PLEASE NOTE: PULLING IRON DESIGNED AS PER A.C.I. 318 FOR WORKING LOAD CAPACITY OF 28,000 POUNDS APPLIED COINCIDENT TO THE MAJOR AXIS OF THE PULLING IRON.
5. SUMP: SEE DRAWING No. NED.MISC.DTLS 1/1
6. BUTYL RUBBER JOINT SEALANT: SEE DRAWING No. 126-15/16.
7. IDENTIFICATION: IMPRESSED INTO CEILING OF VAULT.

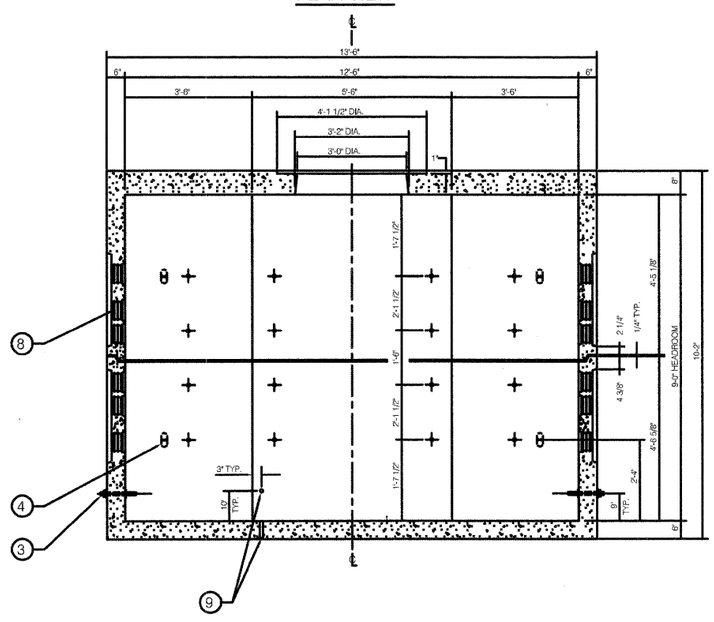

SECTION A-A

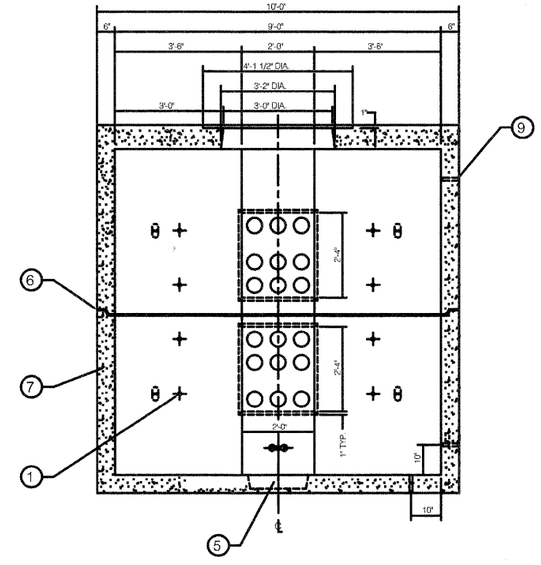

SECTION B-B

ELECTRICAL MANHOLE TYPE I

FILE NAME = ...\RedGate_Dist_DET_01.dgn	DESIGNED - BC	REVISED -	benesch engineers · scientists · planners
USER NAME = gthiesse	DRAWN - BC	REVISED -	ST. CHARLES
PLOT DATE = 11/10/2011	CHECKED - MPM	REVISED -	CITY OF ST. CHARLES
	DATE - 10/23/2011	REVISED -	

ELECTRICAL DISTRIBUTION DETAILS

SCALE: NTS | SHEET NO. 4 OF 5 SHEETS | STA. | TO STA.

F.A. RTE.	SECTION	COUNTY	TOTAL SHEETS	SHEET NO.
	04-00092-00-BR	KANE	440	185

CONTRACT NO. 63650

ILLINOIS FED. AID PROJECT

PLOT SCALE:1:50
M:\projects\2007\...\Workspace\PlotDrv\TITLEBLOCK.tbl