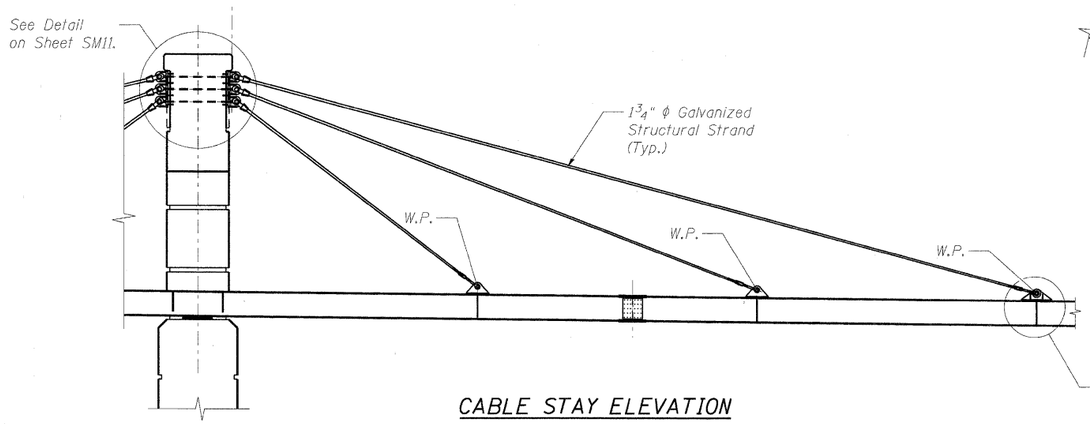

CABLE STAY ELEVATION

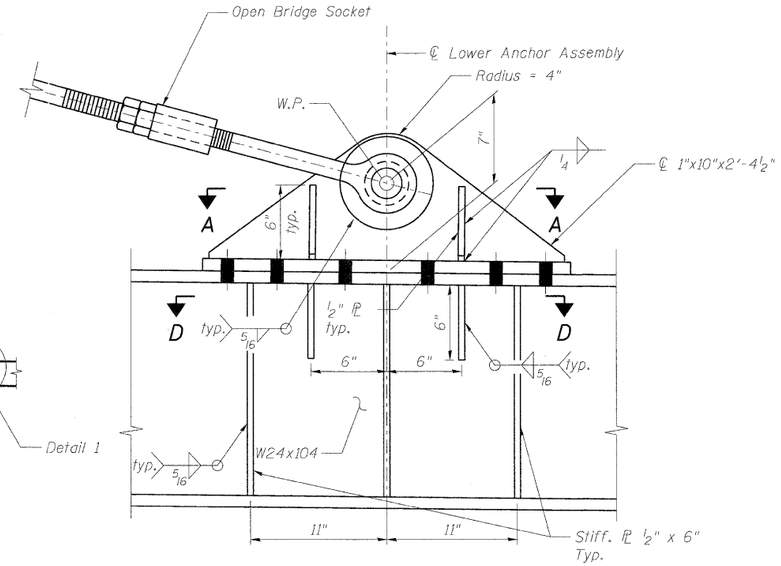

DETAIL 1 - LOWER ANCHORAGE ASSEMBLY

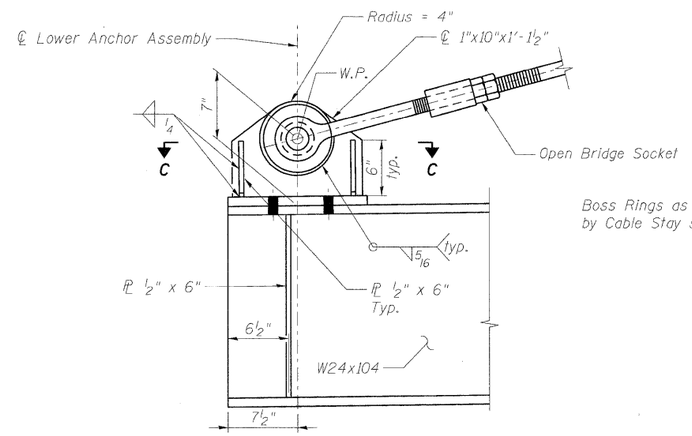

CABLE ANCHOR @ ABUTMENT DETAIL

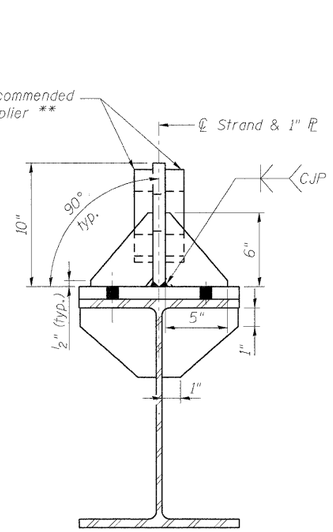

SECTION B-B

** Boss rings shall be welded to the plate prior to boring of the pin hole to ensure proper fit.

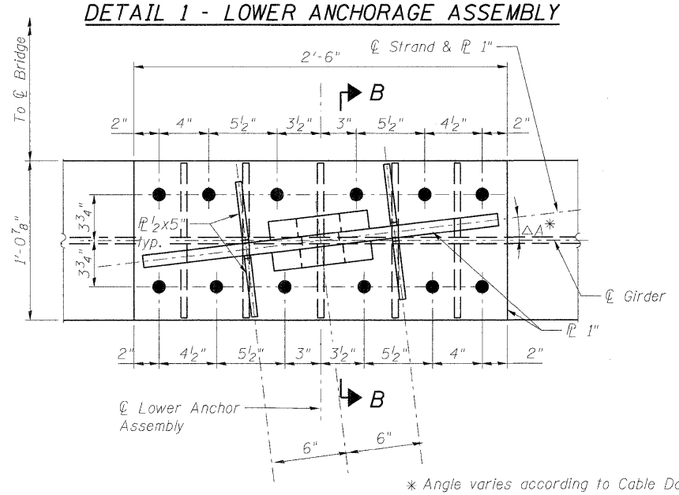

* Angle varies according to Cable Data Chart.

VIEW A-A

Open Bridge Socket
South girder, east of pier shown (Others similar)

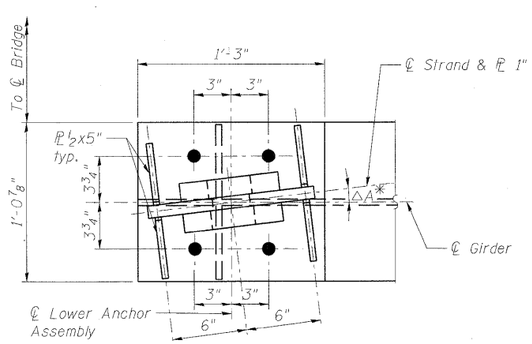

VIEW C-C (@ Abutments)

West Abutment north side shown others similar

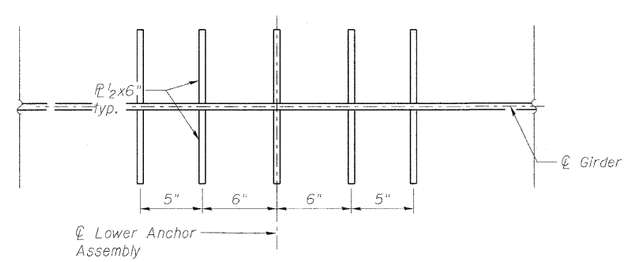

SECTION D-D

Stiffener Plate Locations

CABLE DATA

Cable Location	Estimated Length	ΔA	ΔB
1NWT	63'-8½"	5° 22'	91° 24'
1NWM	43'-3⅝"	4° 58'	89° 31'
1NWB	22'-9"	6° 38'	85° 37'
1SWT	65'-7⅝"	① 1° 21'	84° 36'
1SWM	44'-6¾"	0° 40'	84° 52'
1SWB	23'-3⅞"	4° 29'	83° 17'
1NET	65'-2"	5° 13'	91° 30'
1NEM	43'-6½"	4° 58'	89° 31'
1NEB	22'-11⅞"	6° 38'	85° 36'
1SET	67'-0¾"	① 1° 18'	84° 35'
1SEM	44'-9¼"	0° 39'	84° 52'
1SEB	23'-6¼"	4° 29'	83° 17'
2NWT	63'-9⅝"	4° 55'	98° 38'
2NWM	42'-2¾"	4° 32'	96° 46'
2NWB	21'-10"	5° 56'	93° 08'
2SWT	67'-11"	① 1° 07'	77° 34'
2SWM	45'-7⅝"	0° 56'	77° 45'
2SWB	24'-4"	4° 58'	75° 57'
2,3,4 NET	67'-4⅞"	2° 12'	80° 48'
2,3,4 NEM	45'-5¼"	3° 09'	79° 51'
2,3,4 NEB	24'-6½"	6° 06'	76° 54'
2,3,4 SET	65'-2⅜"	1° 43'	95° 17'
2,3,4 SEM	43'-3½"	2° 27'	94° 33'
2,3,4 SEB	22'-7⅜"	4° 56'	92° 04'
3,4,5 NWT	64'-10⅛"	1° 43'	95° 17'
3,4,5 NWM	42'-11½"	2° 27'	94° 33'
3,4,5 NWB	22'-4¼"	4° 56'	92° 04'
3,4,5 SWT	67'-1"	2° 12'	80° 48'
3,4,5 SWM	45'-1¾"	3° 09'	79° 51'
3,4,5 SWB	24'-3⅝"	6° 06'	76° 54'
5NET	66'-1½"	2° 19'	80° 45'
5NEM	45'-3⅛"	3° 16'	79° 51'
5NEB	24'-3½"	6° 25'	76° 54'
5SET	63'-10¾"	1° 46'	95° 15'
5SEM	43'-1⅝"	2° 27'	94° 33'
5SEB	22'-4¼"	4° 56'	92° 04'

Angle "A" in Table above is shown in View A-A, Open Bridge Socket Detail, and is measured directed away from the bridge. The angle measured at Cable location with notation ①, indicates the angle is measured directed towards the inside of the bridge.

Estimated cable lengths are between work points in the cambered position. Contractor shall be responsible for determining final cable lengths based on selected manufacturer and final details.

1 N W T
- T — Top, Middle or Bottom Cable
- W — East or West Side of Pier
- N — North or South Cable
- 1 — Pier Cable is attached to

NOTES:

1. Wire strand for cables shall be ASTM A586 with ASTM A148 sockets.
2. All bolts for lower anchorage assemblies shall be ⅞" ϕ A490 high strength bolts in 15/16" ϕ holes.
3. Contractor shall be responsible for ensuring coordination between the anchorage assembly details, amd the chosen open bridge and open strand sockets.

benesch engineers · scientists · planners
Alfred Benesch & Company
205 North Michigan Avenue, Suite 2400
Chicago, Illinois 60601
312-565-0450 Job No. 10092

FILE NAME = 0456020.12.CblStyDtls.dgn	USER NAME = akeaschall	DESIGNED - MJF	REVISED -
		CHECKED - AJK	REVISED -
	PLOT SCALE =	DRAWN - RMG	REVISED -
	PLOT DATE = 11/10/2011	CHECKED - AJK	REVISED -

CITY OF ST. CHARLES

CABLE STAY DETAILS (2 OF 2)
STRUCTURE NO. 045-6020 MULTI-USE TRAIL BRIDGE OVER FOX RIVER
SHEET NO. SM12 OF SM19 SHEETS

F.A.I. RTE.	SECTION	COUNTY	TOTAL SHEETS	SHEET NO.
	04-00092-00-BR	KANE	440	290
		CONTRACT NO. 63650		
		ILLINOIS FED. AID PROJECT		

x:\10000s\10092\engineering_documents_redgstephase1\pedbridgeoverfoxriver\final\plans\0456020.12.CblStyDtls.dgn 11/10/2011 4:12:48 PM