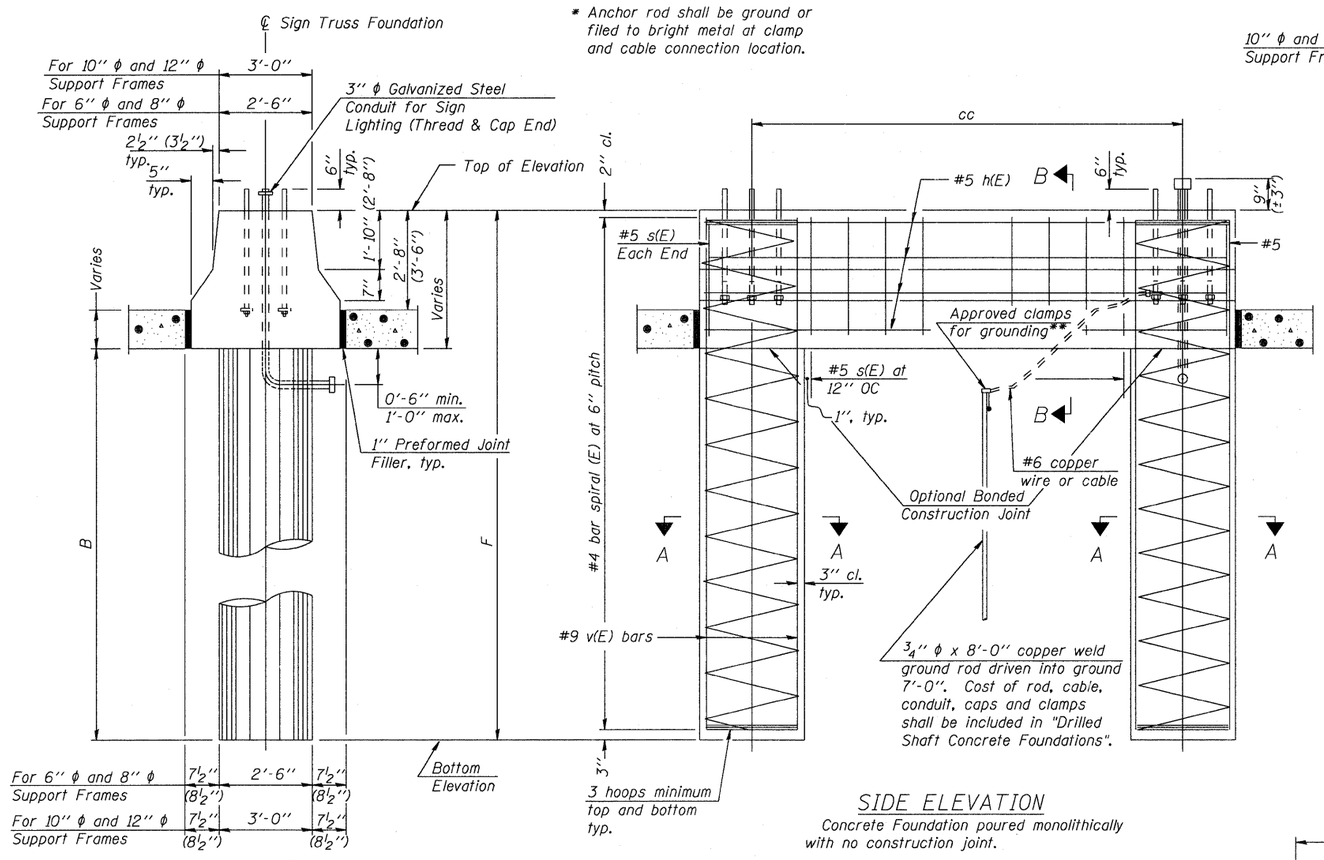

END VIEW

SIDE ELEVATION

Concrete Foundation poured monolithically with no construction joint.

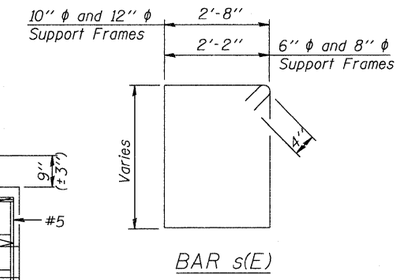

BAR s(E)

NOTES:

The foundation dimensions shown are based on the presence of mostly cohesive soils with an average Unconfined Compressive Strength (Qu) of at least 1.25 tsf, which must be determined by previous soil investigations at the jobsite. When other conditions are indicated, the boring data will be included in the plans and the foundation dimensions shown will be the result of site specific designs.

If the conditions encountered are different than those indicated, the Contractor shall notify the Engineer to determine if the foundation dimensions need to be modified. If dimensions "B" or "F" are revised by more than 12" by the Contractor, "as-built" plans shall be prepared and submitted to the District Bureau of Operations for future reference.

No sonotubes or decomposable forms shall be used below the lower conduit entrance.

Permanent metal forms or other shielding may not be left in place below that elevation without the Engineer's written permission.

Concrete shall be placed monolithically, without construction joints.

Backfill shall be placed per Article 502 of Standard Specification and prior to erection of support column.

A normal surface finish followed by a Bridge Seat Sealer application will be required on concrete surfaces above the lowest elevation 6" below finished ground line. Cost included in Drilled Shaft Concrete Foundation.

Pipe Support Frames	cc	M	a	a/2
6"ϕ	7'-0"	9'-6"	0'-11"	5½"
8"ϕ	7'-6"	10'-0"	1'-1½"	6¾"
10"ϕ	8'-3"	11'-3"	1'-3"	7½"
12"ϕ	9'-0"	12'-0"	1'-6"	9"

All dimensions in parenthesis are for 42" high barrier.

BAR LIST - EACH FOUNDATION

Bar	Number	Size	Length	Shape	
h(E)	10	#5	M less 4"	——	
s(E)	Varies	#5	Varies	□	6" ϕ and 8" ϕ Support Frame
v(E)	16	#9	F less 0'-5"	——	
v(E)	24	#9	F less 0'-5"	——	10" ϕ and 12" ϕ Support Frame
#4(E) bar spiral _ see Side Elevation					

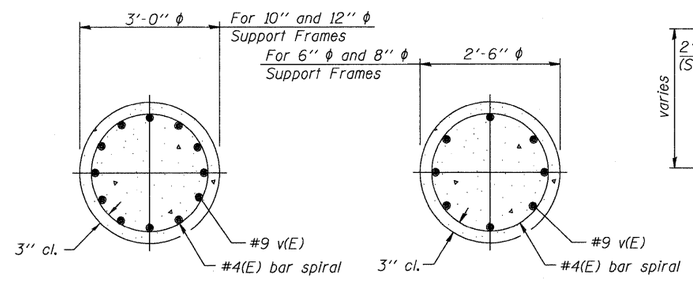

SECTION A-A

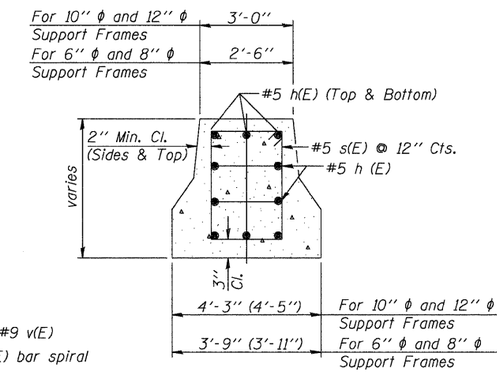

SECTION B-B

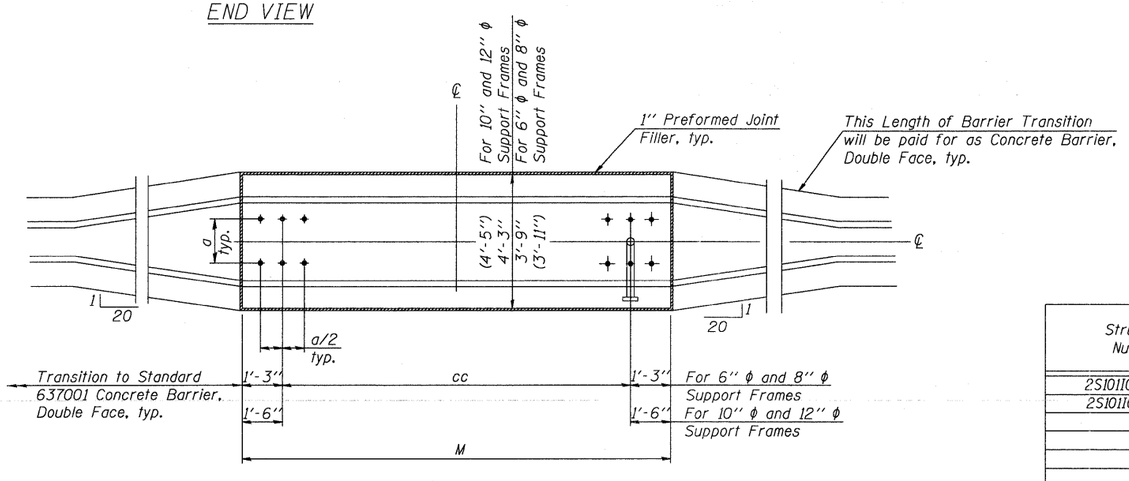

PLAN

Structure Number	Station	Left Foundation				Right Foundation				Class DS Concrete (Cu. Yds.)
		Elevation Top	Elevation Bottom	B	F	Elevation Top	Elevation Bottom	B	F	
2S1011090L00.65	34+18 LT					787.58	762.52 **	20.5' **	25.06' **	17.7 **
2S1011090L01.77	93+50 LT					781.24	752.68	24.0'	28.56'	20.1

**FOUNDATION DESIGN NEEDS TO BE CHECKED AGAINST SOIL BORINGS

OS4-MED 1-20-11

McClure Engineering Associates, Inc. | LOCHNER HNTB LOCHNER, INC., CHICAGO, ILLINOIS | RWA Rubin Weiner & Associates, Inc. | QUIGG ENGINEERING INC.

USER NAME =	DESIGNED -	REVISED -	
	CHECKED - DW	REVISED -	
PLOT SCALE =	DRAWN - JDH	REVISED -	
PLOT DATE = 10/19/2011	DATE - 10-21-2011	REVISED -	

STATE OF ILLINOIS
DEPARTMENT OF TRANSPORTATION

OVERHEAD SIGN STRUCTURES
MEDIAN SUPPORT FOUNDATION DETAILS

SHEET NO. 19 OF 20 SHEETS

F.A. RTE.	SECTION	COUNTY	TOTAL SHEETS	SHEET NO.
90	(X2-1) R	WINNEBAGO	510	326
		CONTRACT NO. 64C29		
		ILLINOIS FED. AID PROJECT		