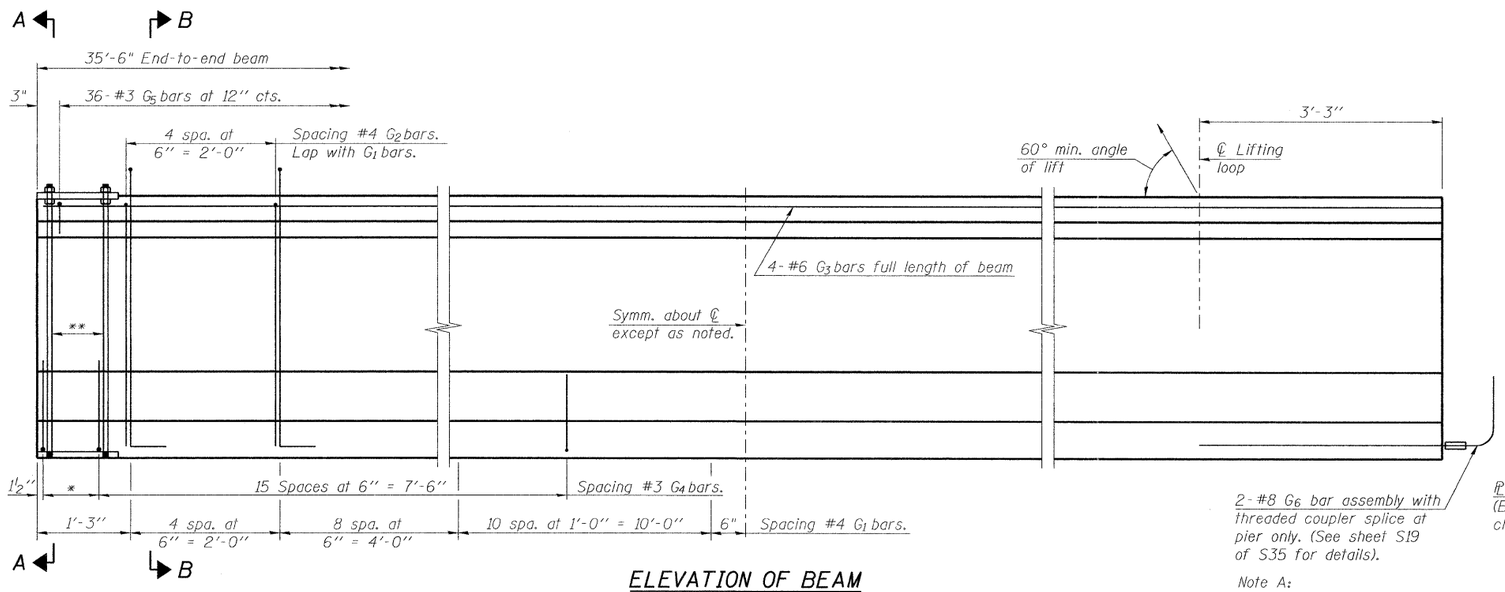

*3 spaces at 3" = 9".
**4-¾" ϕ threaded dowel rods at 3" cts., Each Face.

ELEVATION OF BEAM
(Showing reinforcement & dimensions)

Note A:
Hex nuts (top and bottom) with lock washers (top). Only tighten sufficiently to compress lock washers.

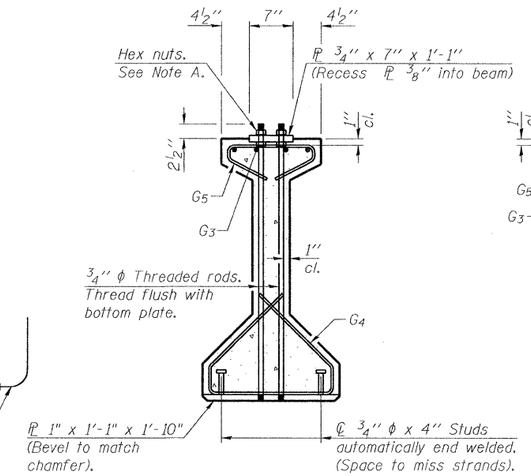

SECTION A-A

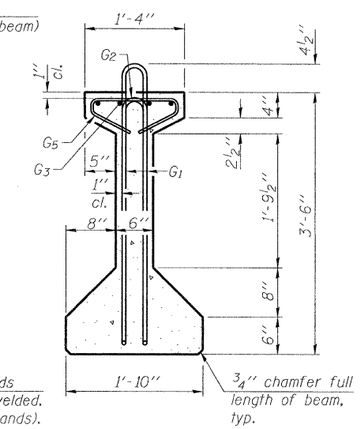

SECTION B-B

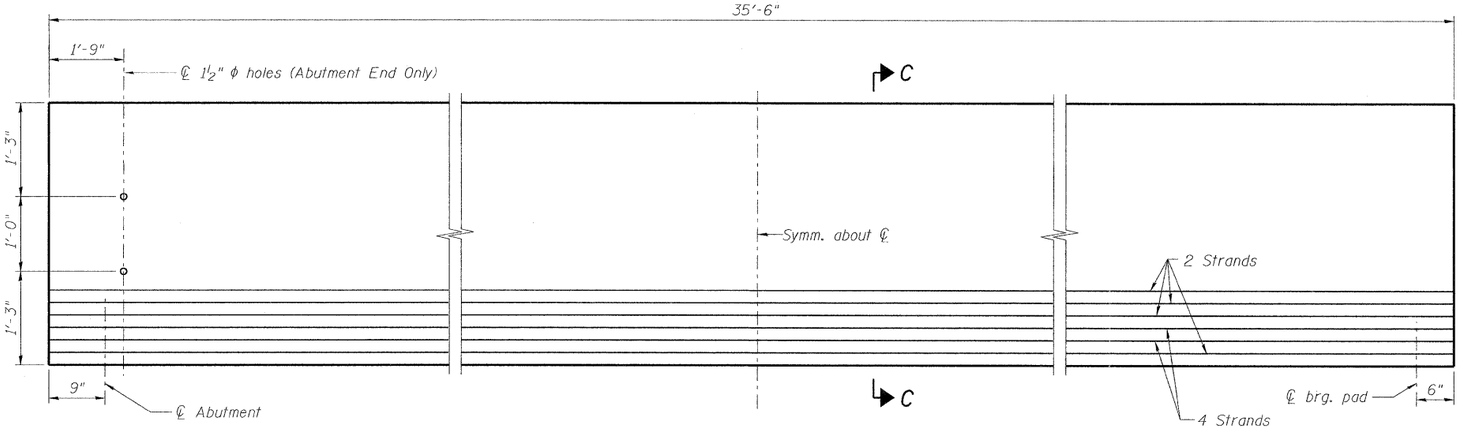

ELEVATION OF BEAM
(Showing prestressing steel)
(Span 1 shown, Span 3 opposite hand)

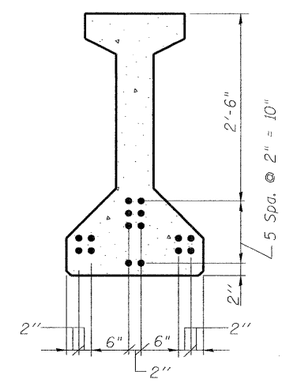

SECTION C-C

***BAR LIST
ONE BEAM ONLY

Bar	No.	Size	Length	Shape
G_1	46	#4	8'-5"	
G_2	10	#4	6'-8"	
G_3	4	#6	35'-2"	
G_4	38	#3	4'-11"	
G_5	36	#3	2'-6"	
G_6	2	#8	6'-6"	

***For information only

Notes:
See sheet S19 of S35 for additional details and Bill of Material.
Required release strength, f'ci, shall be 5,000 psi.
Required final strength, f'c, shall be 6,000 psi.

NOTE:
For locations of 1" I.D. holes for permanent bracing, see sheets S16 and S19 of S35.

benesch
engineers · scientists · planners
Alfred Benesch & Company
205 North Michigan Avenue, Suite 2400
Chicago, Illinois 60601
312-565-0450 Job No. 3938.11

PI-4-42 7-1-10

FILE NAME = 0500225_66A20_017_ppcbeam1&3.dgn	USER NAME = akeaschall	DESIGNED - JLS	REVISED -
		CHECKED - AJK	REVISED -
	PLOT SCALE =	DRAWN - RMG	REVISED -
	PLOT DATE = 10\20\2011	CHECKED - HMA	REVISED -

STATE OF ILLINOIS
DEPARTMENT OF TRANSPORTATION

42" PPC I-BEAM ELEVATION - SPANS 1 & 3
STRUCTURE NO. 050-0255
SHEET NO. S17 OF S35 SHEETS

F.A.P. RTE.	SECTION	COUNTY	TOTAL SHEETS	SHEET NO.
68	(3)BR-3	LASALLE	61	30
		CONTRACT NO. 66A20		
		ILLINOIS FED. AID PROJECT		

x:\3900s\3938\structures\123overbuckcreek\final\plans\0500225_66A20_017_ppcbeam1&3.dgn 10\20\2011 14:47:40