Notes:
Space reinforcement in cap to miss anchor bolts.
Pour steps monolithically with cap.
For details of piles, see sheet 22 of 24.
*Cut $p_6(E)$ and $p_7(E)$ bars to fit skew.
**Mechanical spice or shop welded splice per AWS D1.4.
***Location 3 is Pier 1
****Location 4 is Pier 2
If a portion of the concrete encasement is under water, reinforcement may be placed underwater into forms. Concrete shall be tremied according to Article 503.08 of the Standard Specifications to an elevation of 1'-0" above the water line at the time of construction.

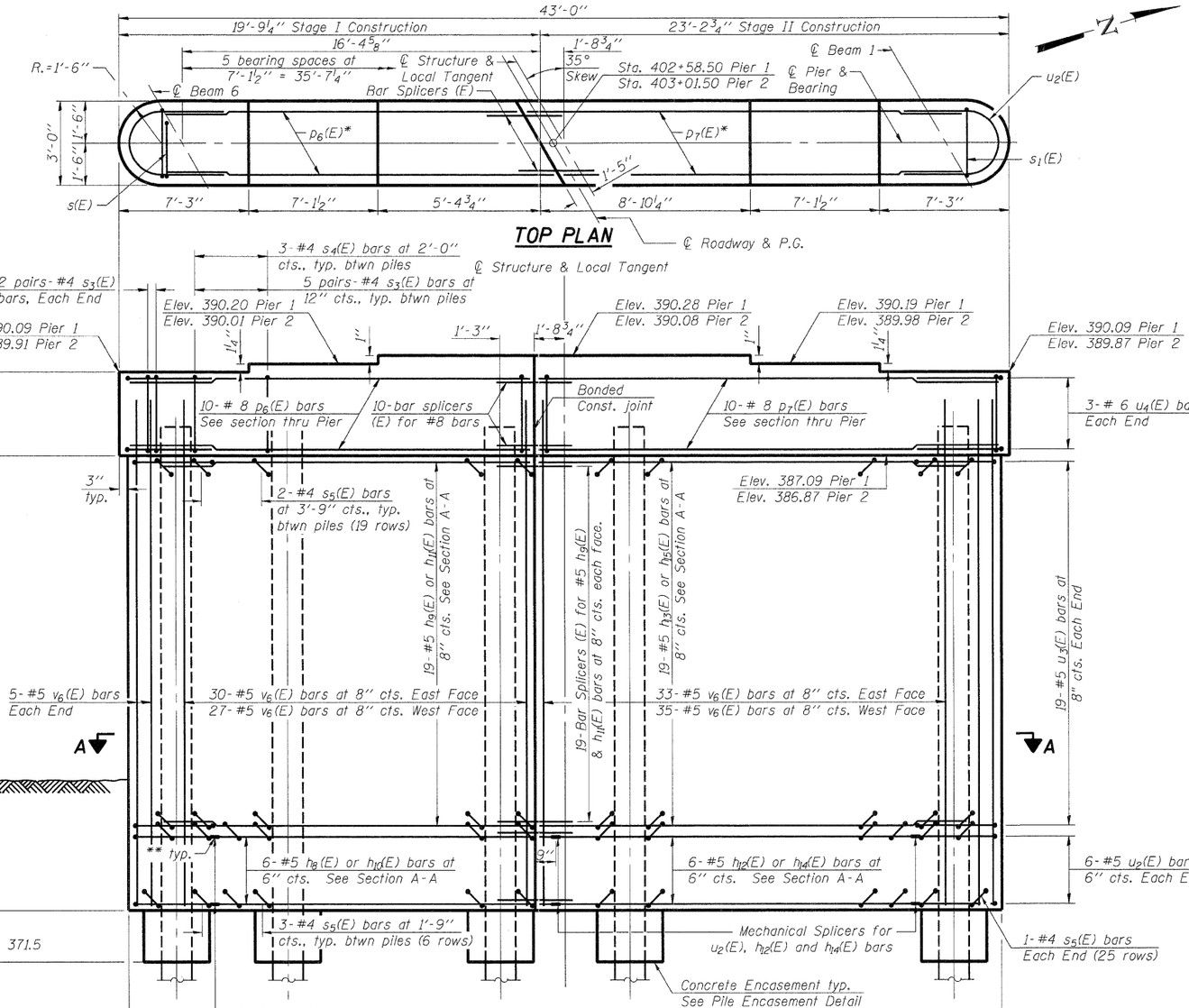

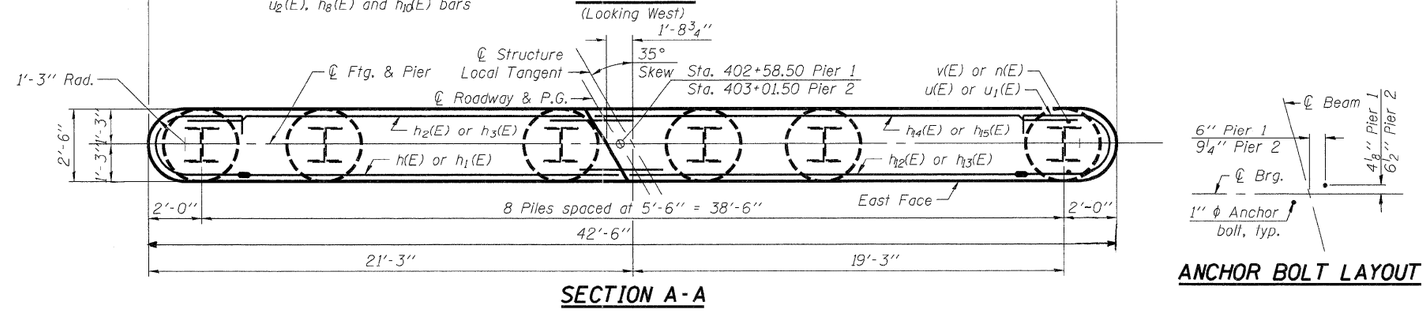

ANCHOR BOLT LAYOUT

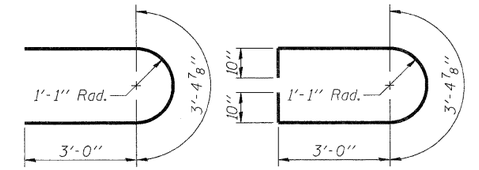

BAR $u_2(E)$ BAR $u_3(E)$

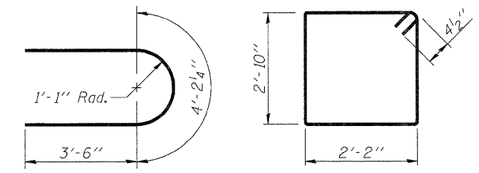

BAR $u_4(E)$ BAR $S_3(E)$

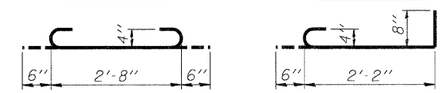

BAR $S_4(E)$ BAR $S_5(E)$

Alternate the position of the 90° hooks on the $S_5(E)$ bars in the field.

BILL OF MATERIAL FOR TWO PIERS

Bar	No.	Size	Length	Shape
$h_8(E)$	12	#5	17'-0"	
$h_9(E)$	38	#5	19'-1"	
$h_{10}(E)$	12	#5	15'-3"	
$h_{11}(E)$	38	#5	17'-4'	
$h_{12}(E)$	12	#5	17'-6"	
$h_{13}(E)$	38	#5	21'-1"	
$h_{14}(E)$	12	#5	19'-3'	
$h_{15}(E)$	38	#5	22'-10"	
$p_6(E)$	20	#8	18'-10"	
$p_7(E)$	20	#8	22'-7"	
$s_3(E)$	148	#4	10'-9"	
$s_4(E)$	42	#4	3'-8"	
$s_5(E)$	884	#4	3'-4"	
$u_2(E)$	24	#5	9'-5"	
$u_3(E)$	124	#5	11'-1"	
$u_4(E)$	12	#6	11'-3"	
$v_6(E)$	250	#5	17'-10"	
Cofferdam Excavation			Cu. Yd.	333.8
Concrete Structures			Cu. Yd.	126.6
Reinforcement Bars, Epoxy Coated			Pound	15920
Furnishing Steel Piles, HP 14x73			Foot	672
Driving Piles			Foot	672
Test Pile Steel HP 14x73			Each	2
Concrete Encasement			Cu. Yd.	9.8
*** Cofferdam Type 1, Location 3			Each	1
**** Cofferdam Type 1, Location 4			Each	1

PILE DATA

Type: Steel HP 14x73
Nominal Required Bearing: 464 kips Pier 1
481 kips Pier 2
Factored Resistance Available: 227 kips Pier 1
237 kips Pier 2
Est. Length: 46' Pier 1
50' Pier 2
No. Production Piles: 14
No. Test Piles: 2

DESIGNED	DF
CHECKED	ADG
DRAWN	ADG
CHECKED	DF

ESI CONSULTANTS, LTD
753 WINDSOR ROAD
CHARLESTON, IL 61920
(217) 348-1906
WWW.ESICONSULTANTSLTD.COM
ILLINOIS DEPARTMENT OF PROFESSIONAL REGULATION REGISTRATION #184-003685

STATE OF ILLINOIS
DEPARTMENT OF TRANSPORTATION

PIERS
STRUCTURE NO. 096-0074
SHEET NO. 21 OF 24 SHEETS

F.A.P. RTE.	SECTION	COUNTY	TOTAL SHEETS	SHEET
823	(22,B2A)B-1 & (22,B2B)B-1	Wayne	85	35

CONTRACT NO. 74216
ILLINOIS FEDERAL AID PROJECT

PRINTED DATE: 12/5/2011
FILE NAME = n:\projects\idot\prb 149, tem 25 - d7 various design\work order 06\cadd\drawings\sheets\35_k06_Pier-sdgn