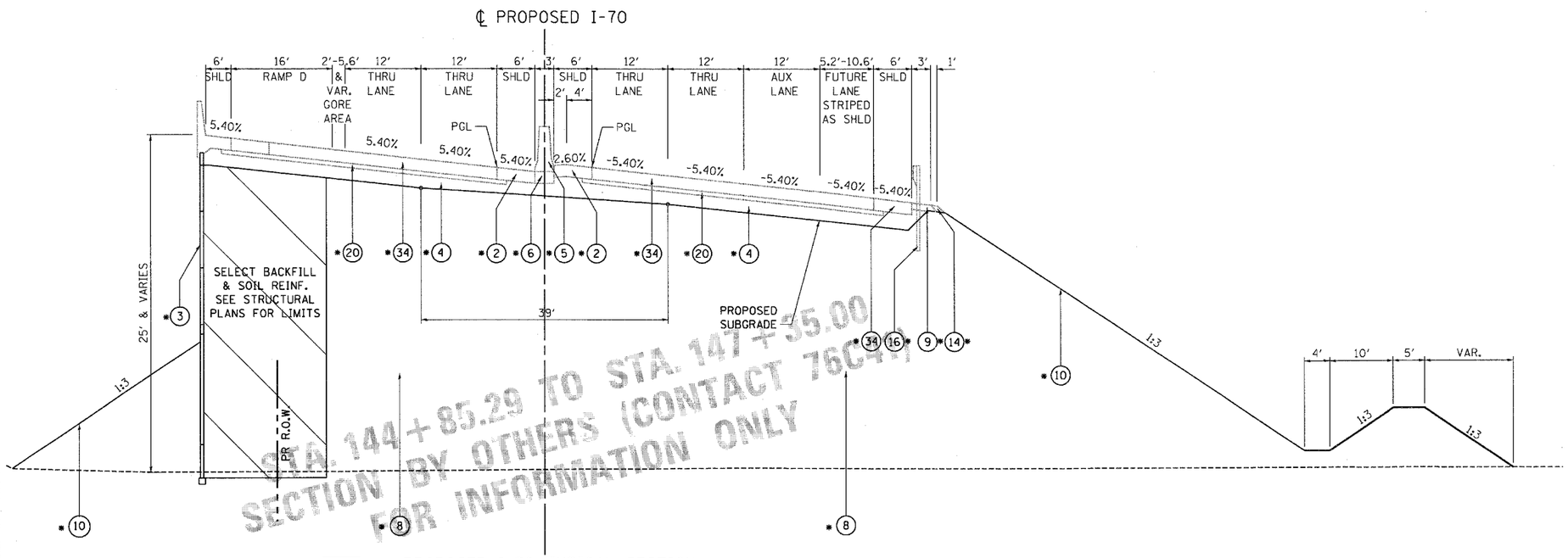

STA. 144 + 85.29 TO STA. 147 + 35.00
SECTION BY OTHERS (CONTACT 76C41)
FOR INFORMATION ONLY

A

PROPOSED I-70 TYPICAL SECTION
STA. 144 + 85.29 TO STA. 147 + 35.00
SECTION BY OTHERS (CONTACT 76C41)
FOR INFORMATION ONLY

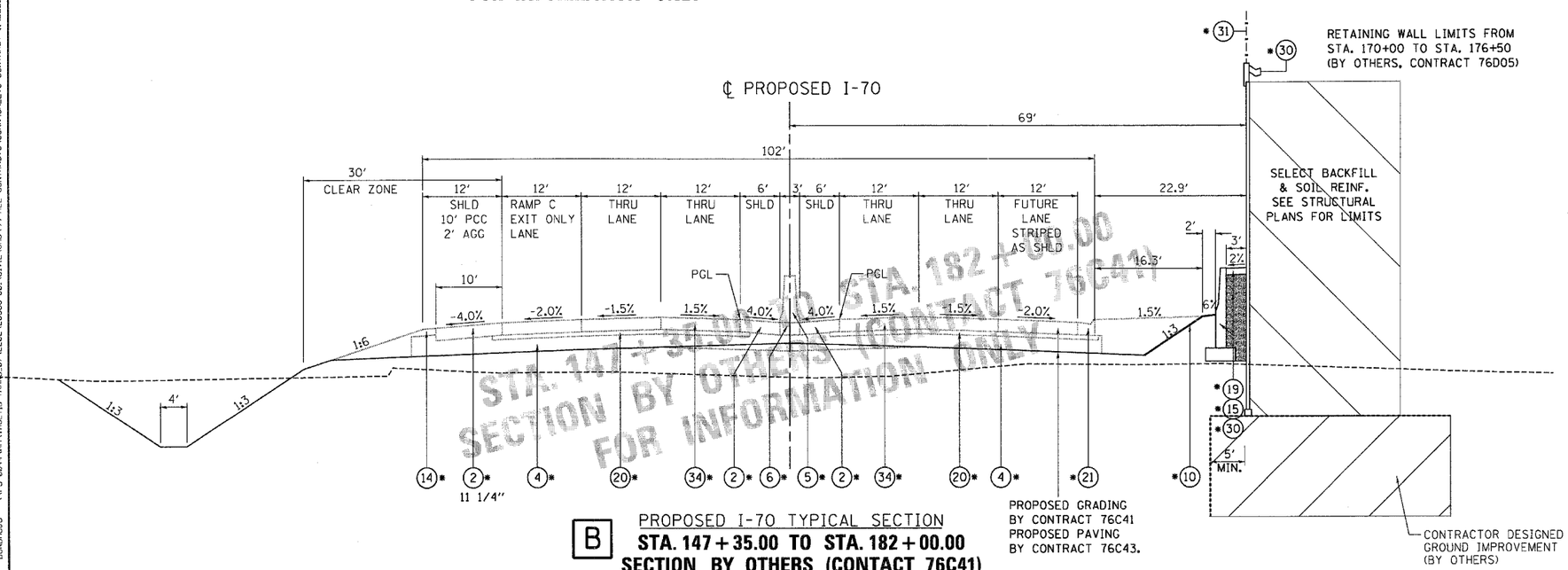

STA. 147 + 35.00 TO STA. 182 + 00.00
SECTION BY OTHERS (CONTACT 76C41)
FOR INFORMATION ONLY

B

PROPOSED I-70 TYPICAL SECTION
STA. 147 + 35.00 TO STA. 182 + 00.00
SECTION BY OTHERS (CONTACT 76C41)
FOR INFORMATION ONLY

EXISTING LEGEND

- (A) EXISTING BITUMINOUS PAVEMENT
- (B) EXISTING PCC PAVEMENT
- (C) AGGREGATE SHOULDER
- (D) CURB AND GUTTER
- (E) BITUMINOUS SHOULDER
- (F) TEMPORARY PAVEMENT
- (G) AGGREGATE SUBGRADE
- (H) EXISTING SIDEWALK
- [R] = REMOVAL

PROPOSED LEGEND

- (1) PORTLAND CEMENT CONCRETE PAVEMENT 11" (JOINTED)
- (2) PORTLAND CEMENT CONCRETE SHOULDERS 11"
- (3) RETAINING WALL (BY OTHERS)
- (4) AGGREGATE SUBGRADE 12"
- (5) CONCRETE BARRIER, DOUBLE FACE, 42 INCH HEIGHT
- (6) CONCRETE BARRIER BASE
- (7) AGGREGATE SURFACE COURSE, TYPE B, 12" (NOT USED)
- (8) EMBANKMENT
- (9) HOT-MIX ASPHALT SHOULDERS, 8"
- (10) SEEDING & LANDSCAPING BY OTHERS
- (11) HOT-MIX ASPHALT PAVEMENT (FULL-DEPTH), 15.75"
- (12) COMBINATION CONCRETE CURB AND GUTTER, TYPE B-6.12
- (13) COMBINATION CONCRETE CURB AND GUTTER, TYPE B-6.24
- (14) AGGREGATE SHOULDERS, TYPE B 6"
- (15) 42" CONCRETE BARRIER (BY OTHERS)
- (16) STEEL PLATE BEAM GUARDRAIL, TYPE A
- (17) CHAIN LINK FENCE, 6'
- (18) HOT-MIX ASPHALT SURFACE COURSE, MIX "D", N70
- (19) CONCRETE MEDIAN SURFACE, 6"
- (20) STABILIZED SUBBASE - HOT-MIX ASPHALT, 4"
- (21) COMBINATION CONCRETE CURB AND GUTTER, TYPE M-4.24
- (22) PORTLAND CEMENT CONCRETE PAVEMENT 10" (JOINTED)
- (23) PORTLAND CEMENT CONCRETE SHOULDERS 10"
- (24) LONGITUDINAL CONSTRUCTION JOINT WITH NO. 6 TIE BARS AT 24" CTS.
- (25) LONGITUDINAL SAWED JOINT WITH NO. 6 TIE BARS AT 18" CTS.
- (26) LONGITUDINAL SAWED JOINT WITH NO. 6 TIE BARS AT 30" CTS.

  ALL TIE BARS SHALL BE EPOXY COATED
- (27) AGGREGATE BASE COURSE, TYPE B 6"
- (28) PORTLAND CEMENT CONCRETE PAVEMENT 12" (JOINTED)
- (29) ANCHORAGE SLAB (BY OTHERS)
- (30) POROUS GRANULAR BACKFILL
- (31) REMOVAL AND DISPOSAL OF UNSUITABLE MATERIAL OR NON-SPECIAL WASTE DISPOSAL
- (32) LIMITS OF ARCHAEOLOGICAL EXPLORATION EARTH EXCAVATION (SPECIAL) AS REQUIRED UNDER PROPOSED ROADWAY SECTION
- (33) PORTLAND CEMENT CONCRETE SHOULDERS 12"
- (34) CONTINUOUSLY REINFORCED PORTLAND CEMENT CONCRETE PAVEMENT 11 1/4" (BY OTHERS)
- (35) PIPE UNDERDRAINS 4"
- (36) PORTLAND CEMENT CONCRETE SIDEWALK 5 INCH
- (37) CONCRETE MEDIAN, TYPE SB-6.12
- (38) CONCRETE MEDIAN, TYPE SB-6.24
- * = BY OTHERS
- [ ] = INDICATES PAYMENT INCLUDED IN COST OF ANOTHER ITEM

NOTE: THE COST OF THE ADDITIONAL THICKNESS OF AGGREGATE SUBGRADE 12" REQUIRED BENEATH THE SHOULDERS SHALL BE INCLUDED IN THE CONTRACT UNIT PRICE PER SQ YD FOR AGGREGATE SUBGRADE 12".