SHOP CAMBER TABLE

Unit Length L_1 or L_2	Shop Camber at End
15'	1½"
16'-17'	1¾"
18'-20'	2"
21'-22'	2¼"
23'-25'	2½"
26'-27'	2¾"
28'-30'	3"
31'-32'	3¼"
33'-35'	3½"

Truss Type	Bolts	Weld Sizes		A	B
	Dia.	W	W_1		
I-F-A	⅞"	5/16"	¼"	8¾"	11¾"
II-F-A	1"	⅜"	¼"	11"	14½"
III-F-A	1¼"	9/16"	5/16"	11½"	15"

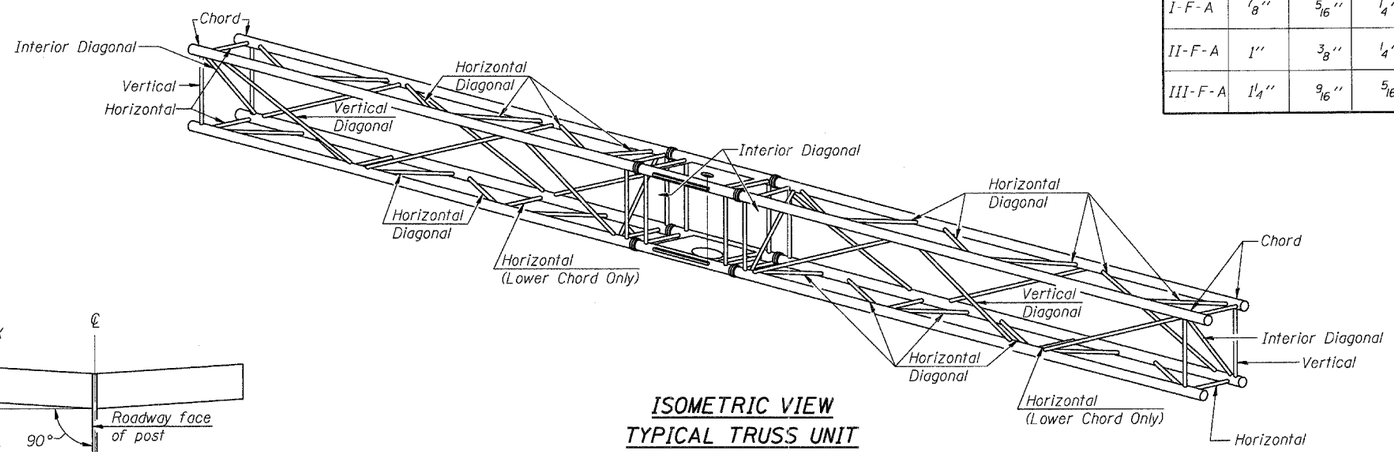

ISOMETRIC VIEW TYPICAL TRUSS UNIT

ASTM B221 Alloy 6061 Temper T6

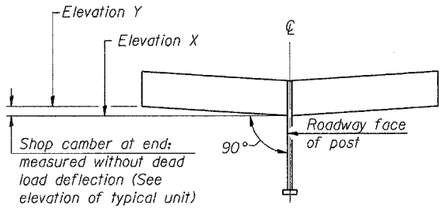

CAMBER DIAGRAM

(For Fabrication Only)

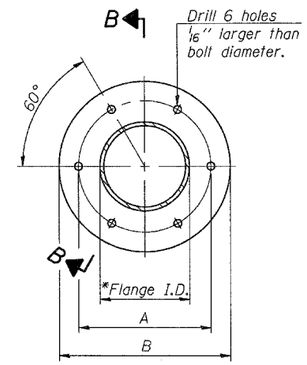

SPLICING FLANGE

ASTM b221, Alloy 6061-T6
or ASTM B209, Alloy 6061-T651

* To fit O.D. of Chord with maximum gap of 1/16".

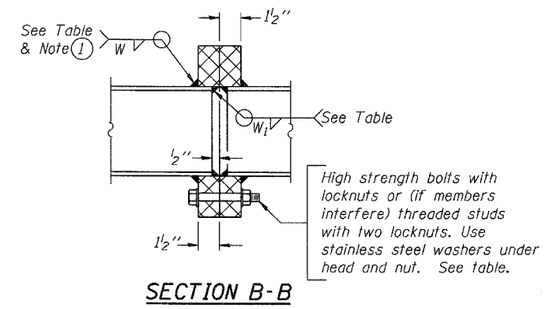

SECTION B-B

(1) Splicing Flanges shall be attached to each truss unit with the truss shop assembled to camber shown. Truss units shall be in proper alignment and flange surfaces shall be shop bolted into full contact before welding. Sufficient external welds or tacks shall be made to secure flanges until remaining welds are made after disassembly. Adjacent flanges shall be "match marked" to insure proper field assembly.

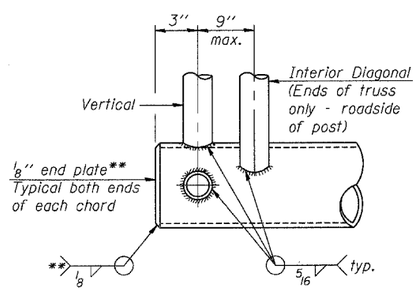

BUTTERFLY END JOINT DETAIL

** Contractor may alternatively use standard aluminum drive-fit cap to close ends.

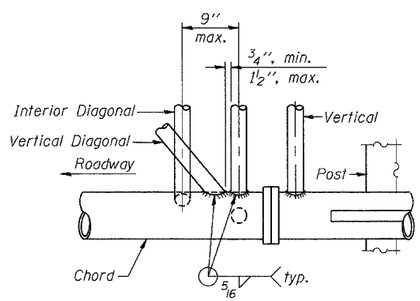

POST END JOINT DETAIL

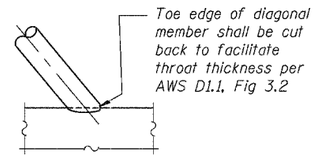

DETAIL A

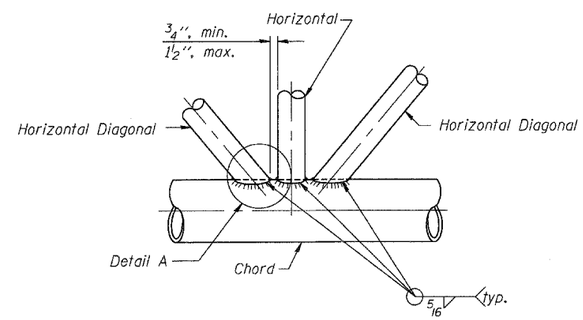

TRUSS INTERIOR JOINT DETAIL

OSF-A-2A 1-20-11

FILE NAME = $FILEL$	USER NAME = $USER$	DESIGNED - JLR	REVISED -
		DRAWN - JLR	REVISED -
	PLOT SCALE = $SCALE$	CHECKED - MDJ	REVISED -
	PLOT DATE = $DATE$	DATE - 10/21/11	REVISED -

TENG — TENG & ASSOCIATES, INC. ENGINEERS/ARCHITECTS/PLANNERS CHICAGO, ILLINOIS

STATE OF ILLINOIS
DEPARTMENT OF TRANSPORTATION
PROPOSED RELOCATED IL ROUTE 3 INTERCHANGE

BUTTERFLY SIGN STRUCTURES - TRUSS DETAILS
ALUMINUM TRUSS & STEEL POST

SCALE: | SHEET NO. OF SHEETS | STA. TO STA.

F.A.P. RTE.	SECTION	COUNTY	TOTAL SHEETS	SHEET NO.
998	82-2-1K	ST. CLAIR	353	220
		CONTRACT NO. 76E06		

FED. ROAD DIST. NO. | ILLINOIS | FED. AID PROJECT

..\DBCONN-11-BORDERLDGN,..\DBCONN-11-DESIGNLDGN
10-19-2011,15:26:06 BONDHUJD \\FS-0044\AM\VAULT\D-TRANS.07\2222\20868 001\STRUCT\CAD\01 DESIGN\SIGNSTRUCTURE\SHEET\DBCONN-11-SHT-SIGNSC.DGN