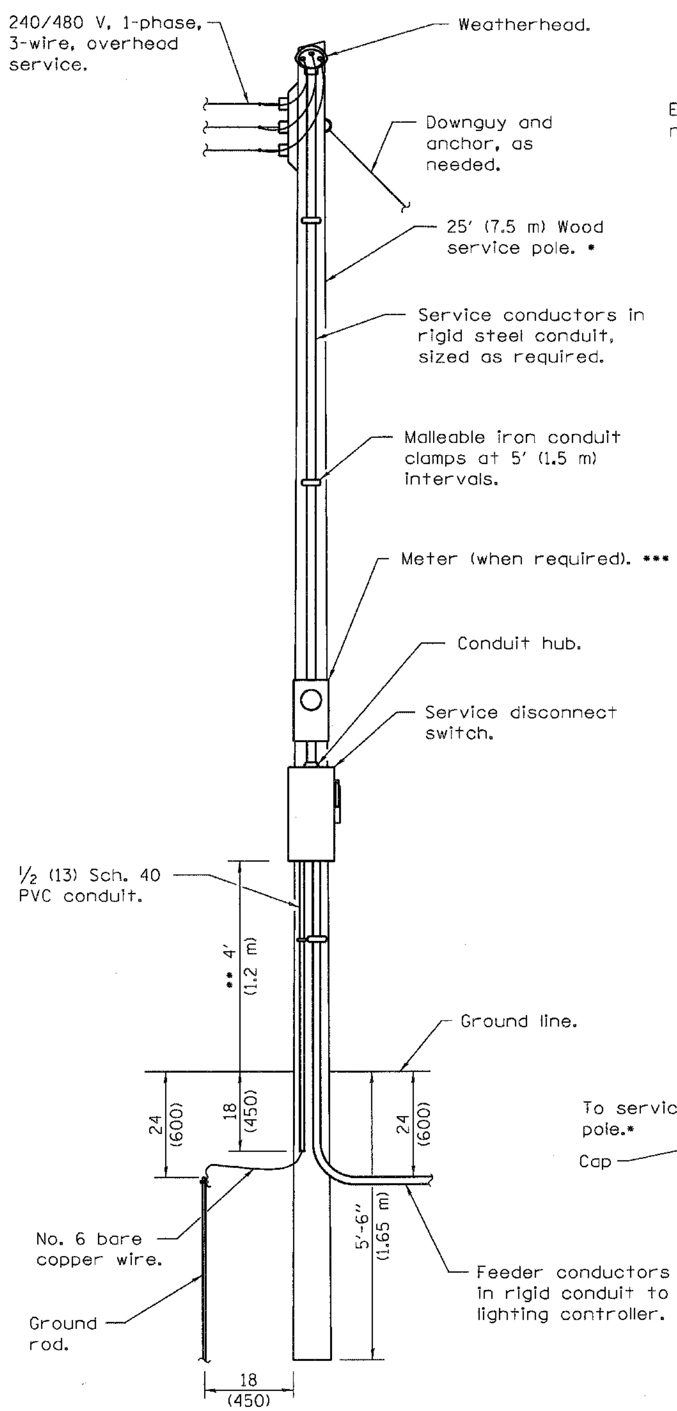

240/480 V ELECTRIC SERVICE INSTALLATION #1

- * Size larger as needed.
- ** Or as directed by Utility Company.
- *** When cold sequencing is required, provide a meter disconnect switch as directed by Utility Company.

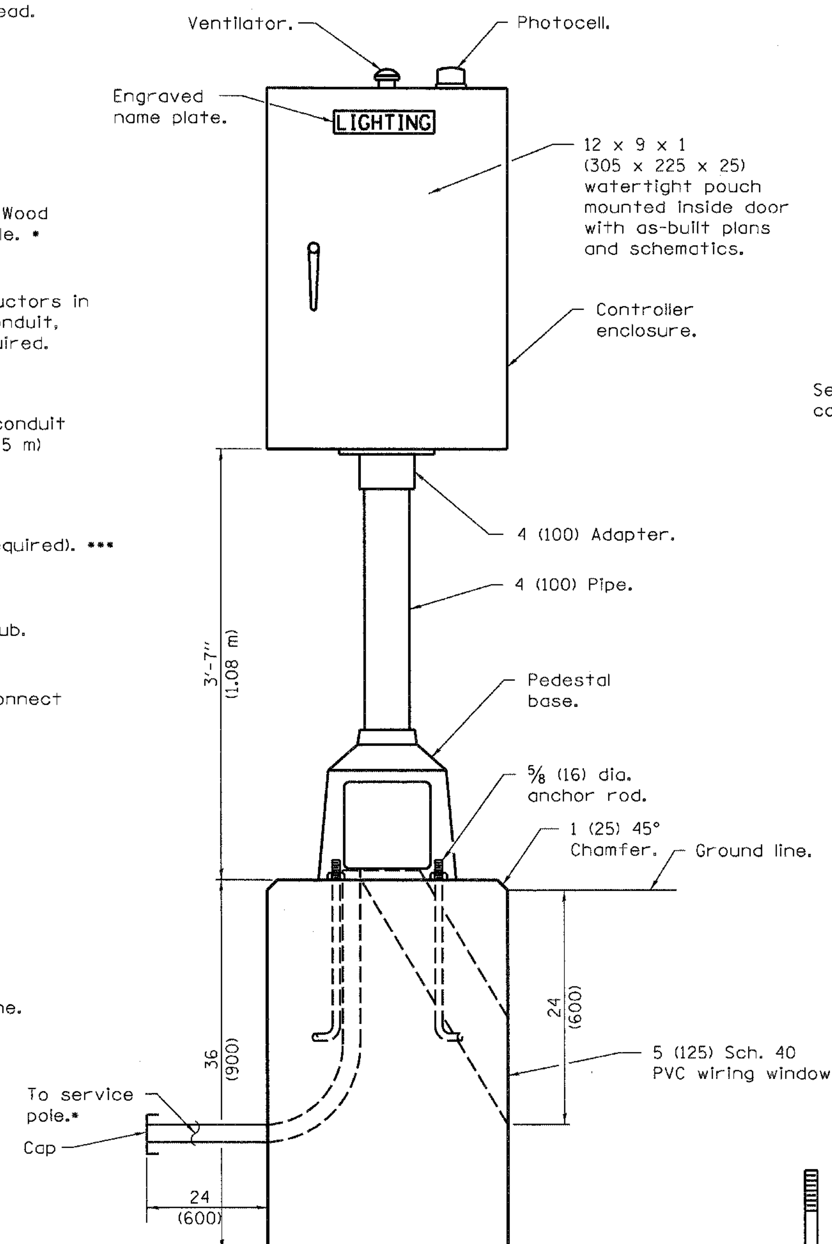

LIGHTING CONTROLLER

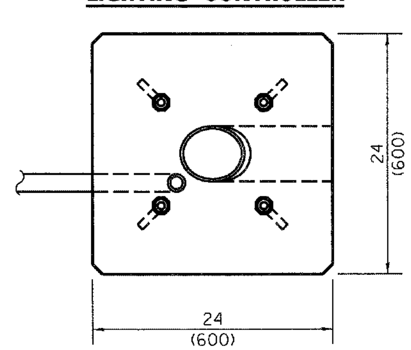

FOUNDATION (PLAN)

(Work pad not shown.)

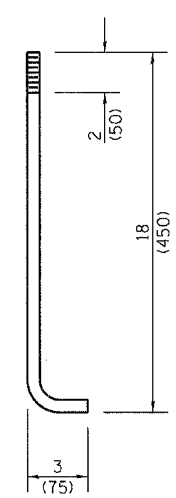

ANCHOR ROD DETAIL

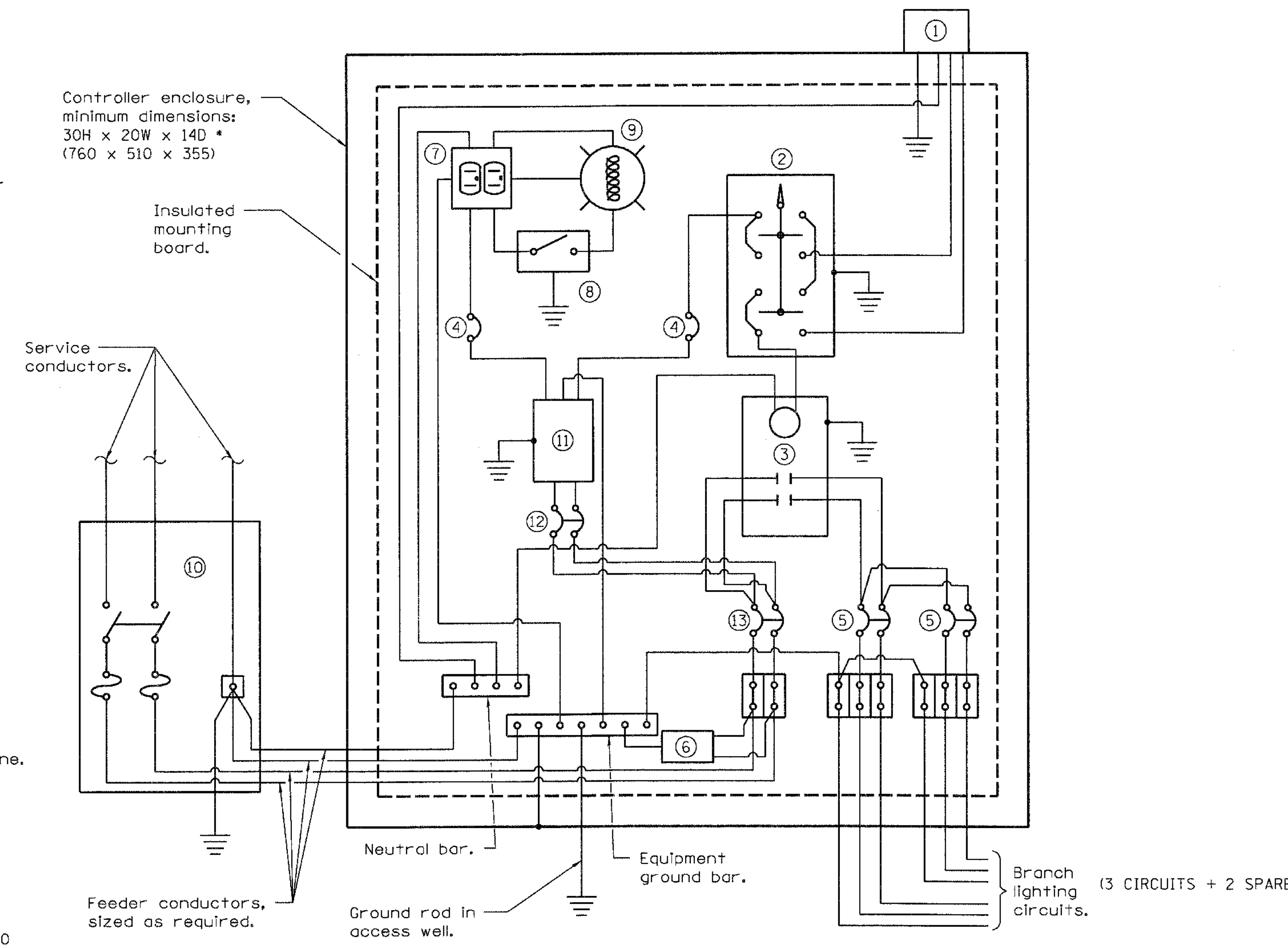

CONTROL SCHEMATIC

1. Photocell with integral surge arrester.
2. HAND-OFF-AUTO selector switch.
3. 100 amp*, electrically held contactor.
4. 15 amp, 1-pole circuit breaker.
5. 30 amp*, 2-pole circuit breaker (one additional and two spares required but not shown).
6. Surge arrester.
7. GFCI duplex receptacle.
8. Single-pole, single-throw switch.
9. Incandescent luminaire, enclosed and gasketted with 100 watt lamp.
10. Service disconnect switch - 2-pole, 3-wire, 60 amp*, fused at 60 amp*, solid neutral in NEMA 4X enclosure having lockable external handle.
11. Transformer - 1KVA*, 480V primary, 120/240V secondary, single-phase, 60Hz.
12. 15 amp, 2-pole circuit breaker.
13. 60 amp*, 2-pole circuit breaker.

* Size larger as needed.

All dimensions are in inches (millimeters) unless otherwise shown.

CONTROLLER #1

Concrete foundation already installed under separate contract (76D05).

$$$ref_list_name$$$ $$$$date_time$$$$ $$user$$ $$$$$$$$$$$$$$$$$dgn_name$$$$$$$$$$$$$$$$$$$$

FILE NAME = $FILEL$	USER NAME = $USER$	DESIGNED - AAB	REVISED -
ABNA ENGINEERING INC. PROFESSIONAL ENGINEERS EAST ST. LOUIS, ILLINOIS		DRAWN - MNR	REVISED -
ABNA engineering	PLOT SCALE = $SCALE$	CHECKED - JL	REVISED -
	PLOT DATE = $DATE$	DATE - 10/21/11	REVISED -

STATE OF ILLINOIS
DEPARTMENT OF TRANSPORTATION
I-70 CONNECTION

CONTROL INSTALLATION

SCALE: | SHEET NO. 1 OF 1 SHEETS | STA. | TO STA.

F.A.P. RTE.	SECTION	COUNTY	TOTAL SHEETS	SHEET NO.
998	82-2-1K	ST. CLAIR	353	270
		CONTRACT NO. 76E06		

FED. ROAD DIST. NO. | ILLINOIS | FED. AID PROJECT