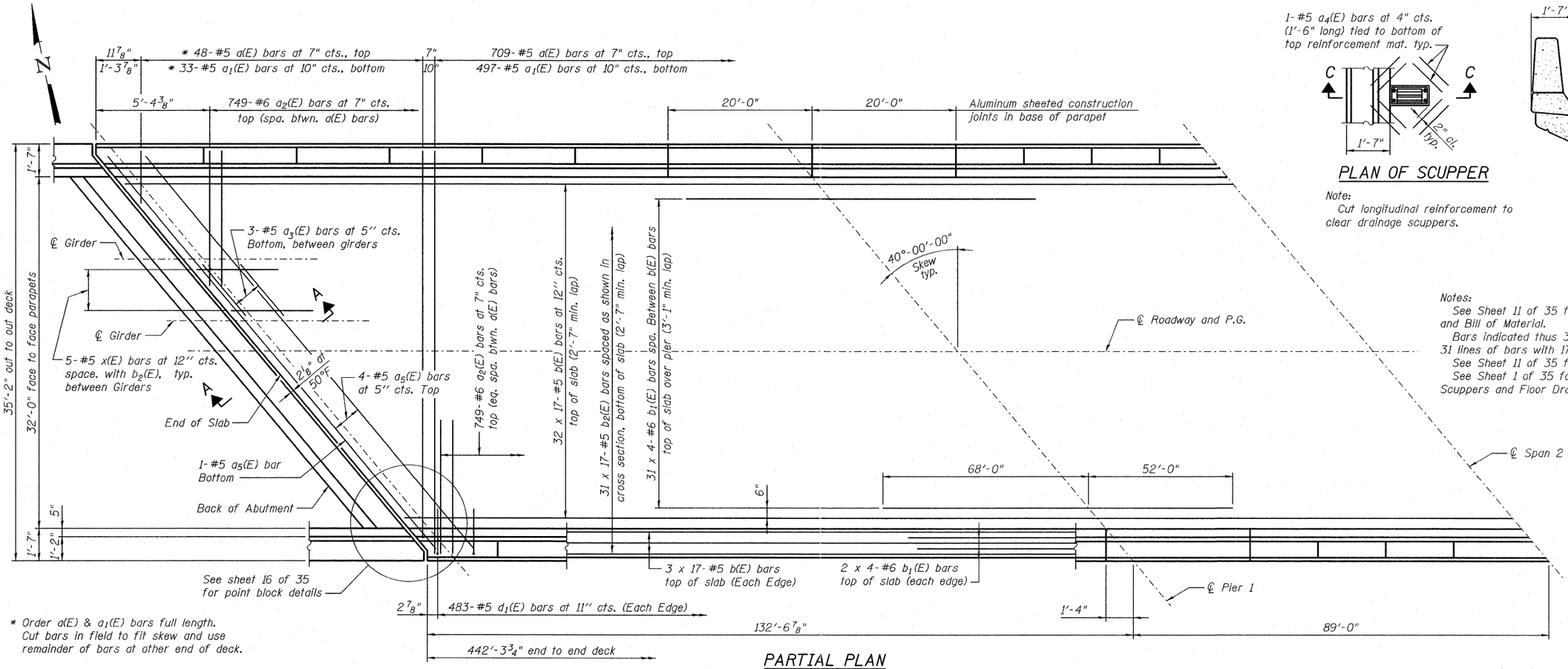

* Order a(E) & a1(E) bars full length.
Cut bars in field to fit skew and use
remainder of bars at other end of deck.

PARTIAL PLAN

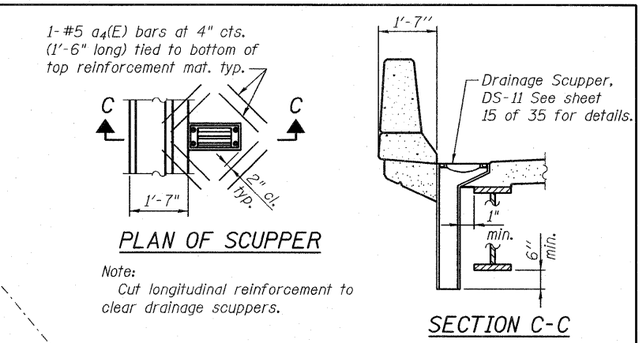

PLAN OF SCUPPER

Note:
Cut longitudinal reinforcement to clear drainage scuppers.

SECTION C-C

Notes:
See Sheet 11 of 35 for superstructure details and Bill of Material.
Bars indicated thus 31 x 17-#5 etc. indicates 31 lines of bars with 17 lengths per line.
See Sheet 11 of 35 for parapet reinforcement.
See Sheet 1 of 35 for spacing of Drainage Scuppers and Floor Drains.

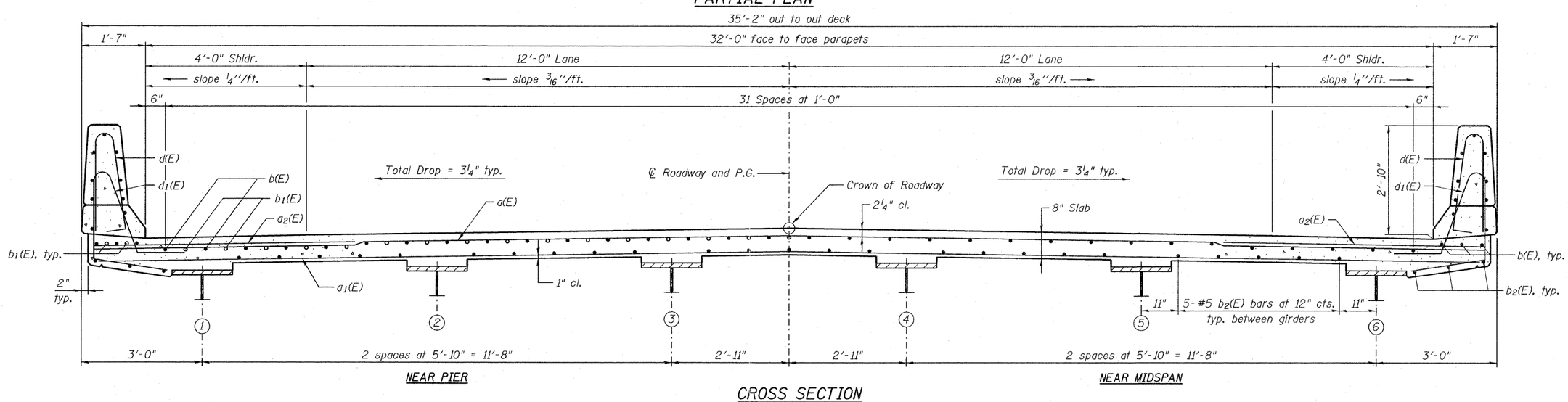

CROSS SECTION

(Looking East/Ahead Station)

JACOBS	USER NAME =	DESIGNED - B. ERSCHEN	REVISED -	STATE OF ILLINOIS DEPARTMENT OF TRANSPORTATION	SUPERSTRUCTURE PLAN AND SECTION STRUCTURE NO. 039-0074	F.A.P. RTE.	SECTION	COUNTY	TOTAL SHEETS	SHEET NO.
		CHECKED - M. CRONIN	REVISED -			686	114B-1	JACKSON	89	114
	PLOT DATE = 19-OCT-2011	DRAWN - C. SALLADE	REVISED -					CONTRACT NO. 78049		
FILE NAME=039-0074978049-Superstructure.dgn		CHECKED - F. CAMBA	REVISED -		SHEET NO. 10 OF 35 SHEETS			ILLINOIS FED. AID PROJECT		

P:\CIX26703\700cadd\709str\039-0074978049-Superstructure.dgn 19-OCT-2011 15:47