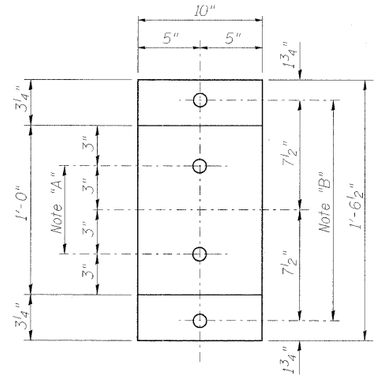

PLAN AT PIERS

Note "A":
$1\frac{3}{8}$"φ Holes - 1" deep in top plate for $1\frac{1}{4}$"φ pintles. Thread or press fit in bottom plate.

Note B:
1"φx12" Anchor bolts ASTM A307 Grade C with $2\frac{1}{4}$"x$\frac{5}{16}$" ℙ washer under nut $1\frac{1}{4}$"φ holes in bottom ℙ.

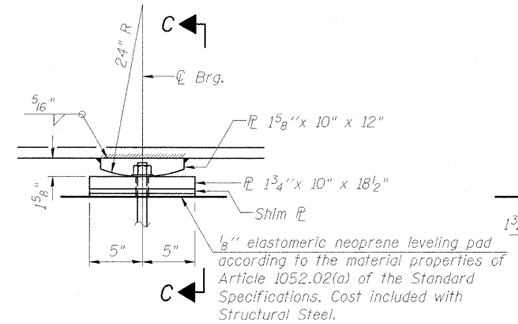

ELEVATION AT PIER

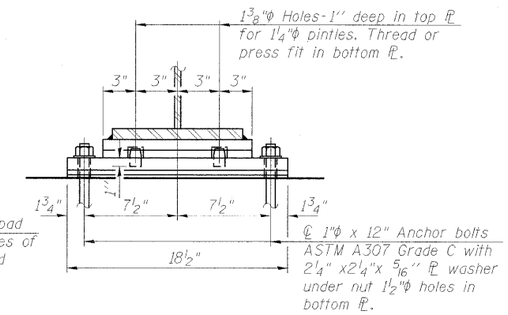

SECTION C-C

FIXED BEARING AT PIERS 1 & 2

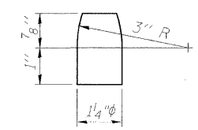

PINTLE

Notes:

Anchor bolts shall be ASTM F1554 all-thread (or an Engineer-approved alternate material) of the grade(s) and diameter(s) specified. ASTM A307 Grade C anchor bolts may be used in lieu of ASTM F1554 Grade 36 (Fy=36ksi). The corresponding specified grade of AASHTO M314 anchor bolts may be used in lieu of ASTM F1554.

Anchor bolts at fixed bearings may be either cast in place or installed in holes drilled after the supported member is in place.

Drilled and set anchor bolts shall be installed according to Article 521.06 of the Standard Specifications.

Two $\frac{1}{8}$ in. adjusting shims shall be provided for each bearing in addition to all other plates or shims and placed as shown on bearing details.

The anchor bolt sizes and grades shown constitute a calculated seismic structural fuse. Substitution of higher diameter and/or grade will not be allowed.

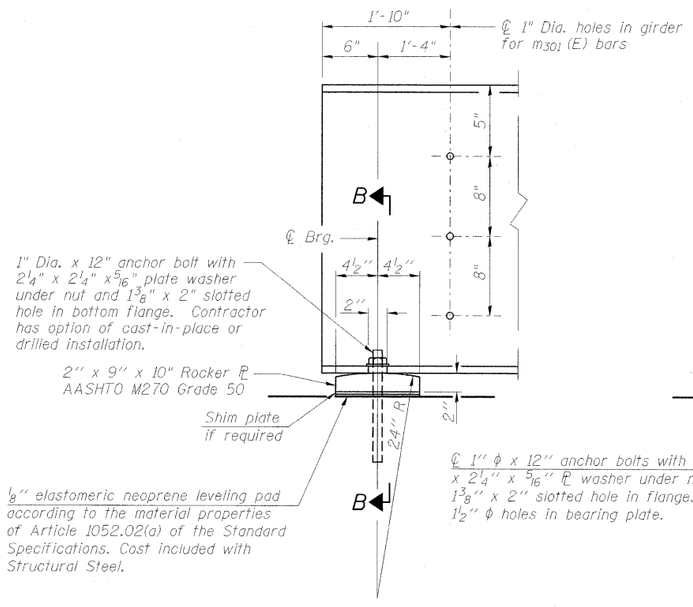

ELEVATION AT ABUTMENT

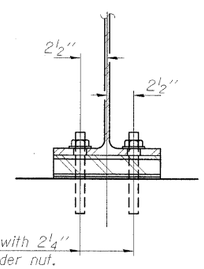

SECTION B-B

FIXED BEARING AT ABUTMENTS

I_s, S_s: Non-composite moment of inertia and section modulus of the steel section used for computing f_s (Total-Strength I, and Service II) due to non-composite dead loads (in.^{4} and in.^{3}).

$I_c(n)$, $S_c(n)$: Composite moment of inertia and section modulus of the steel and deck based upon the modular ratio, "n", used for computing f_s (Total-Strength I, and Service II) due to short-term composite live loads (in.^{4} and in.^{3}).

$I_c(3n)$, $S_c(3n)$: Composite moment of inertia and section modulus of the steel and deck based upon 3 times the modular ratio, "3n", used for computing f_s (Total-Strength I, and Service II) due to long-term composite (superimposed) dead loads (in.^{4} and in.^{3}).

Z: Plastic Section Modulus of the steel section in non-composite areas. Omit line in Moment Table if not used in design calculations (in.^{3}).

DC1: Un-factored non-composite dead load (kips/ft.).

M_{DC1}: Un-factored moment due to non-composite dead load (kip-ft.).

DC2: Un-factored long-term composite (superimposed excluding future wearing surface) dead load (kips/ft.).

M_{DC2}: Un-factored moment due to long-term composite (superimposed excluding future wearing surface) dead load (kip-ft.).

DW: Un-factored long-term composite (superimposed future wearing surface only) dead load (kips/ft.).

M_{DW}: Un-factored moment due to long-term composite (superimposed future wearing surface only) dead load (kip-ft.).

M_{LL+IM}: Un-factored live load moment plus dynamic load allowance (impact) (kip-ft.).

M_u (Strength I): Factored design moment (kip-ft.).
$1.25\,(M_{DC1} + M_{DC2}) + 1.5\,M_{DW} + 1.75\,M_{LL+IM}$

$\phi_f M_n$: Compact composite positive moment capacity computed according to Article 6.10.7.1 (kip-ft.).

$\phi_f M_{nc}$: Compact non-composite negative moment capacity computed according to Article A6.1.1 (kip-ft.).

f_s (Service II): Sum of stresses as computed from the moments below (ksi).
$M_{DC1} + M_{DC2} + M_{DW} + 1.3\,M_{LL+IM}$

V_r: Maximum factored shear range in composite portion of span computed according to Article 6.10.10.

INTERIOR GIRDER MOMENT TABLE				
		0.4 Sp. 1 or 0.6 Sp. 3	Pier 1 or Pier 2	0.5 Sp. 2
I_s	(in^4)	2850	2850	2850
$I_c(n)$	(in^4)	8890	4425	8890
$I_c(3n)$	(in^4)	6620	4425	6620
S_s	(in^3)	213	213	213
$S_c(n)$	(in^3)	339	263	339
$S_c(3n)$	(in^3)	306	263	306
DC1	(k/')	0.730	0.730	0.730
M_{DC1}	('k)	75	-149	83
DC2	(k/')	0.204	0.204	0.204
M_{DC2}	('k)	21	-43	23
DW	(k/')	0.300	0.300	0.300
M_{DW}	('k)	31	-63	34
M_{LL+IM}	('k)	322	-267	313
M_u (Strength I)	('k)	730	905	848
$\phi_f M_n$, $\phi_f M_{nc}$	('k)	1754	1301	1719
f_s DC1	(ksi)	4.22	9.69	6.03
f_s DC2	(ksi)	0.82	2.28	1.18
f_s DW	(ksi)	1.22	3.38	1.73
f_s 1.3(LL+IM)	(ksi)	11.40	17.50	12.35
f_s (Service II)	(ksi)	17.66	32.85	21.29
V_r	(k)	32.9	45	33.8

INTERIOR GIRDER REACTION TABLE			
		Abut.	Pier
R_{DC1}	(k)	21.3	36.1
R_{DC2}	(k)	3.0	10.4
R_{DW}	(k)	4.4	15.2
R_{LL+IM}	(k)	65.4	82.9
R_{Total}	(k)	94.1	144.6

CMT
CRAWFORD MURPHY & TILLY, INC.
CONSULTING ENGINEERS
SPRINGFIELD, IL ■ AURORA, IL ■ ST. LOUIS, MO
ROCKFORD, IL ■ PEORIA, IL ■ CHICAGO, IL

FILE NAME = ...\Ramp I\BEARING DETAILS_013.dgn	USER NAME = Rob Heady	DESIGNED - BPD	REVISED -
		CHECKED - REB	REVISED -
	PLOT SCALE =	DRAWN - GLD	REVISED -
	PLOT DATE = 10/7/2011	CHECKED - BPD	REVISED -

STATE OF ILLINOIS
DEPARTMENT OF TRANSPORTATION

STRUCTURAL STEEL DETAILS
STRUCTURE NO. 100-0097

SHEET NO. 12 OF 23 SHEETS

F.A. RTE.	SECTION	COUNTY	TOTAL SHEETS	SHEET NO.
*	(X1-6-2)HB-1	WILLIAMSON	968	672
* F.A.I. 57 AND F.A.P. 331		CONTRACT NO. 78182		
		ILLINOIS FED. AID PROJECT		