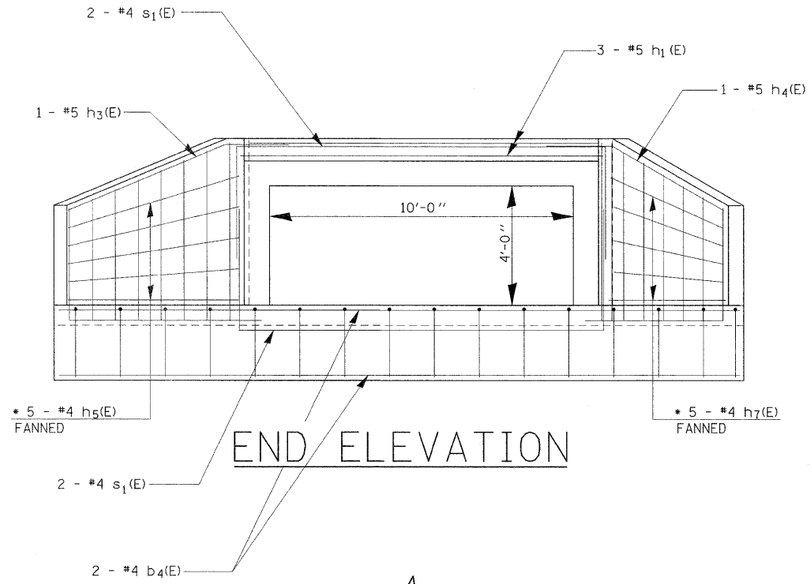

END ELEVATION

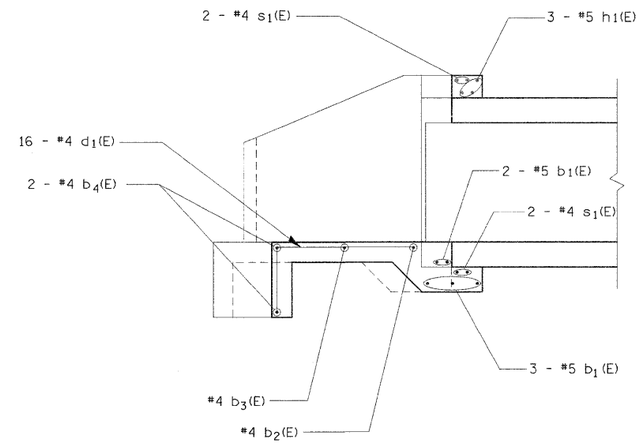

SECTION A-A

MINIMUM BAR LAP

#4 & #5 BAR = 1'-8"

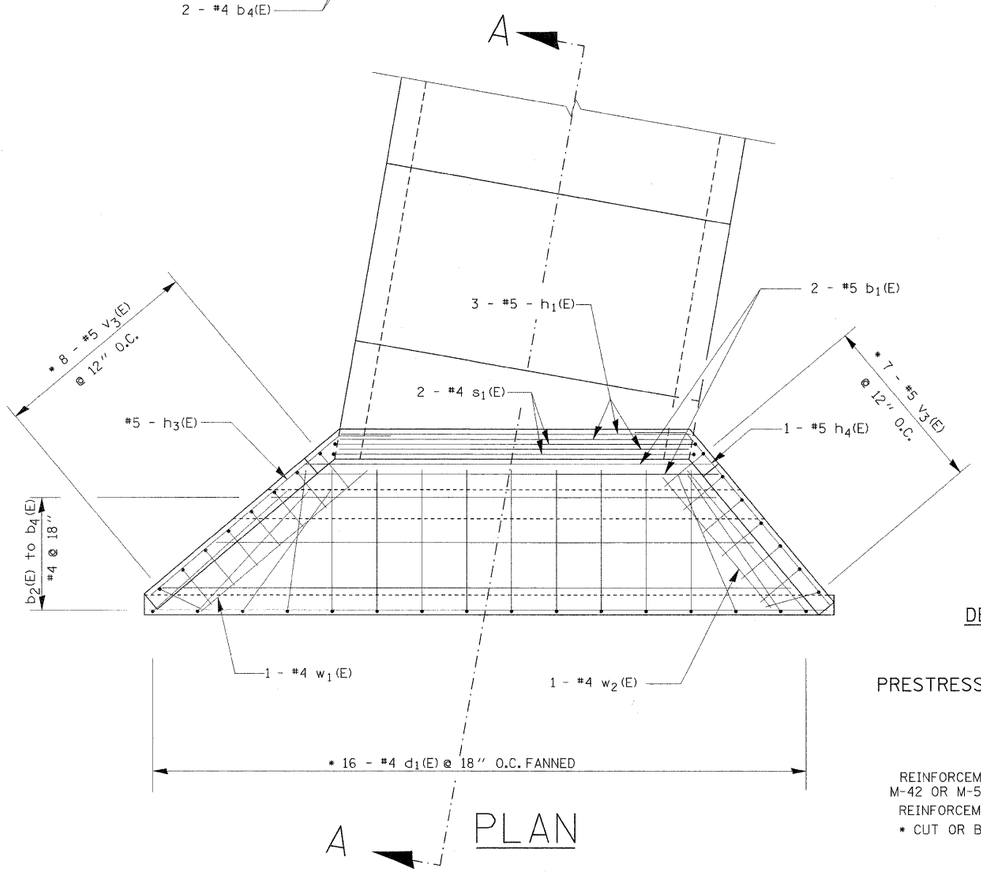

PLAN

BAR d1(E)

BAR v3(E)

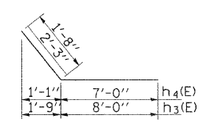

BARS h4(E) & h3(E)

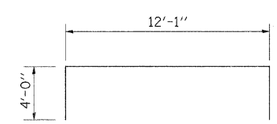

BAR s1(E)

BILL OF MATERIAL

Bar	No.	Size	Length	Shape
b1(E)	5	#5	13'-8"	
b2(E)	1	#4	14'-9"	
b3(E)	1	#4	18'-0"	
b4(E)	2	#4	21'-0"	
d1(E)	16	#4	6'-3"	
h1(E)	3	#5	11'-6"	
h3(E)	1	#5	10'-3"	
h4(E)	1	#5	8'-8"	
h5(E)	5	#4	7'-10"	
h7(E)	5	#4	6'-10"	
s1(E)	4	#4	20'-1"	
v3(E)	15	#5	7'-5"	
w1(E)	1	#4	7'-4"	
w2(E)	1	#4	6'-4"	
CONCRETE BOX CULVERTS			Cu. Yd.	6.5
REINFORCEMENT BARS, EPOXY COATED			Pound	470

DESIGN STRESSES

fy = 60,000 psi
f'c = 3,500 psi

PRESTRESSED BOX LOADING HL 93

NOTES

REINFORCEMENT BARS SHALL CONFORM TO THE REQUIREMENTS OF AASHTO M-31 M-42 OR M-53, GRADE 60.

REINFORCEMENT BARS DESIGNATED (E) SHALL BE EPOXY COATED.

* CUT OR BEND IN FIELD TO FIT

FILE NAME = c:\pw_work\pwidot\deterdinggj\d0265173\sh-78255_sht_091-7046_pln_Default.dgn	USER NAME = deterdinggj	DESIGNED -	REVISED -
		DRAWN -	REVISED -
	PLOT SCALE = 50.0000 ' / in.	CHECKED -	REVISED -
	PLOT DATE = 11/7/2011	DATE -	REVISED -

STATE OF ILLINOIS
DEPARTMENT OF TRANSPORTATION

UPSTREAM HEADWALL
REINFORCEMENT DETAILS

SCALE: SHEET OF SHEETS STA. TO STA.

F.A.P. RTE.	SECTION	COUNTY	TOTAL SHEETS	SHEET NO.
885	13B-1	UNION	14	11
		CONTRACT NO. 78255		
		ILLINOIS FED. AID PROJECT		