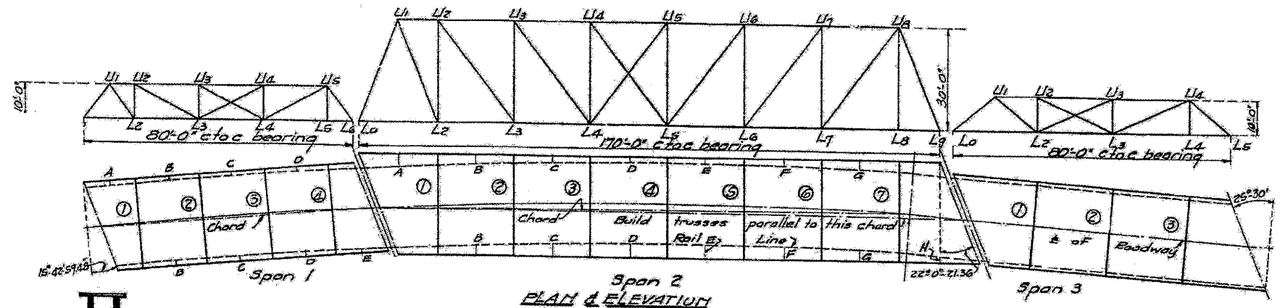

PLAN & ELEVATION

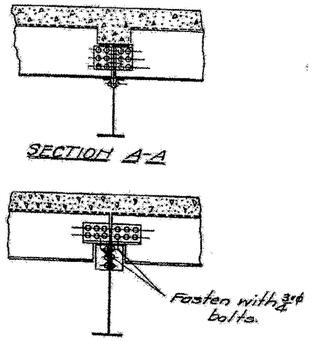

SECTION A-A

SECTION B-B

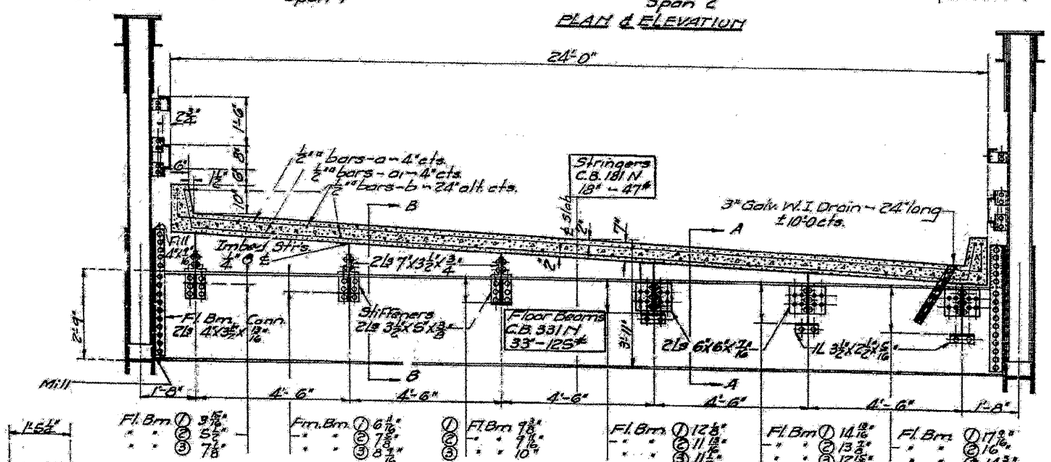

CROSS SECTION SPAN 3

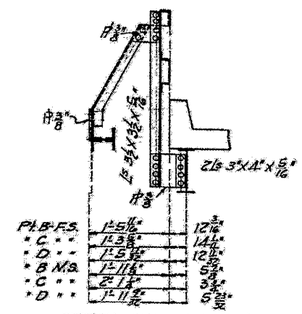

DETAIL OF INT. RAIL POST @ PTS B-C-D SPAN #1

PT'S A & E DETAIL OF INTERMEDIATE RAIL POST SPAN 1

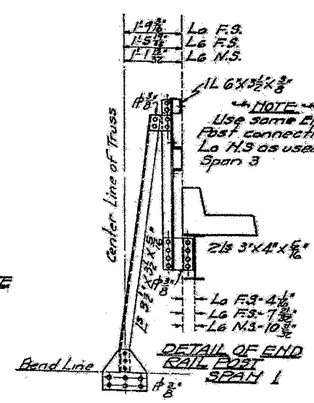

DETAIL OF END RAIL POST SPAN 1

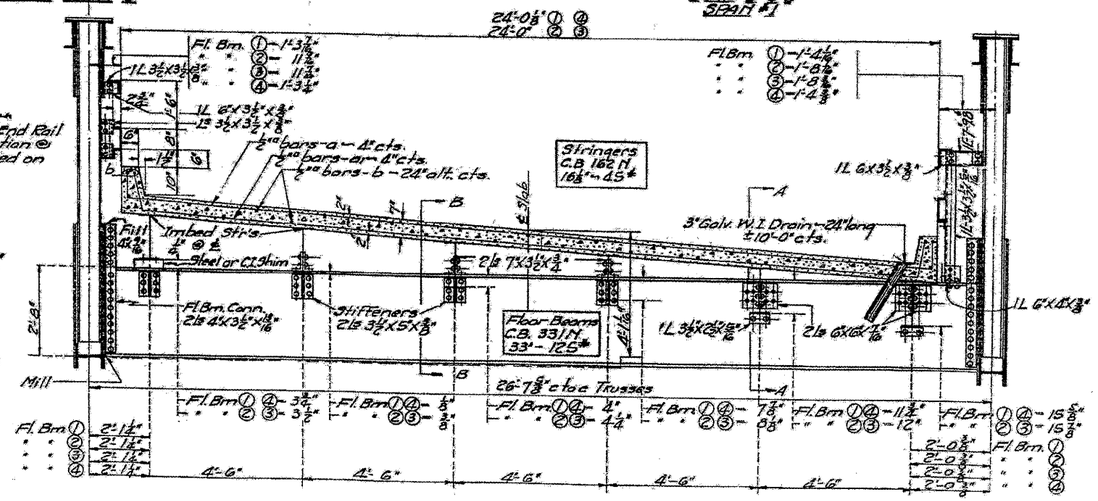

CROSS SECTION SPAN 1

FOR INFORMATION ONLY

CROSS-SECTIONS - SPANS 1 & 3
S.B.I. ROUTE 150 - SEC. 133-C
ALEXANDER CO.
STA. 1212+ 84.95

STATE OF ILLINOIS DEPARTMENT OF TRANSPORTATION	S.N. 002-0009	RTE.	SECTION	COUNTY	TOTAL SHEETS	SHEET NO.
	OLD IL ROUTE 3 OVER SEXTON CREEK	150C	133P-1	ALEXANDER	14	9
	SCALE: ___ SHEET NO. __ OF __ STA. ___ TO ___			CONTRACT NO. 78269		
				ILLINOIS FED. AID. PROJECT		