F.A.I. RTE.	SECTION	COUNTY	TOTAL SHEETS	SHEET NO.
90/94	2004-098TS	COOK	63	46
STA.		TO STA.		
FED. ROAD DIST. NO. 1	ILLINOIS	FED. AID PROJECT		

62839

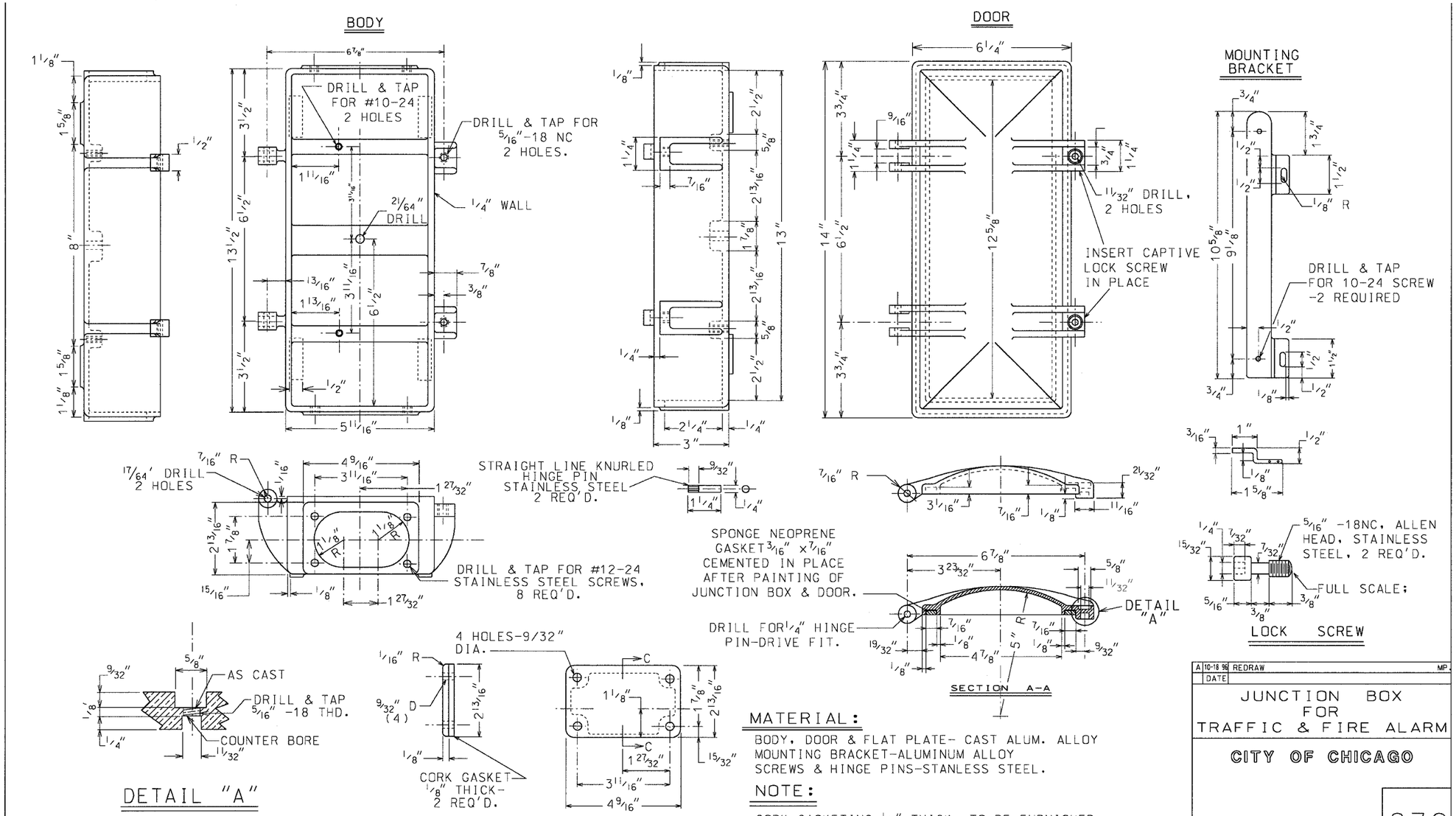

MATERIAL:

BODY, DOOR & FLAT PLATE- CAST ALUM. ALLOY
MOUNTING BRACKET-ALUMINUM ALLOY
SCREWS & HINGE PINS-STANLESS STEEL.

NOTE:

CORK GASKETING 1/8" THICK, TO BE FURNISHED BETWEEN FLAT PLATE AND BODY.

A	10-18 96	REDRAW MP
	DATE	

JUNCTION BOX FOR TRAFFIC & FIRE ALARM

CITY OF CHICAGO

832

BOE-20

REVISIONS	
NAME	DATE

ILLINOIS DEPARTMENT OF TRANSPORTATION
F.A.I. 90/94 (DAN RYAN EXPRESSWAY)
TRAFFIC SIGNALS AT 59TH STREET AND WENTWORTH AVENUE / WELLS STREET

BOE STANDARD DETAILS

SCALE: NOT TO SCALE
DRAWN BY: HAR
DATE: November 12, 2004
CHECKED BY: WDS

CTE ENGINEERS
CONSOER TOWNSEND ENVIRODYNE ENGINEERS, INC.
303 EAST WACKER DRIVE, SUITE 600
CHICAGO ILLINOIS 60601-5212, PHONE: (312) 938-0300

m:\p40468\select\14-ctr9.sth\contract 9b7\boeDtv\2020.stt
11/09/2004 11:03:57 AM