CONTRACT NO. 68420

F.A.P. RTE.	SECTION	COUNTY	TOTAL SHEETS	SHEET NO.
317	D4 BRIDGE REP.	PEORIA	14	10
STA. 409+99.08		TO STA. 414+72.02		
FED. ROAD DIST. NO. 4	ILLINOIS	FED. AID PROJECT		

68420

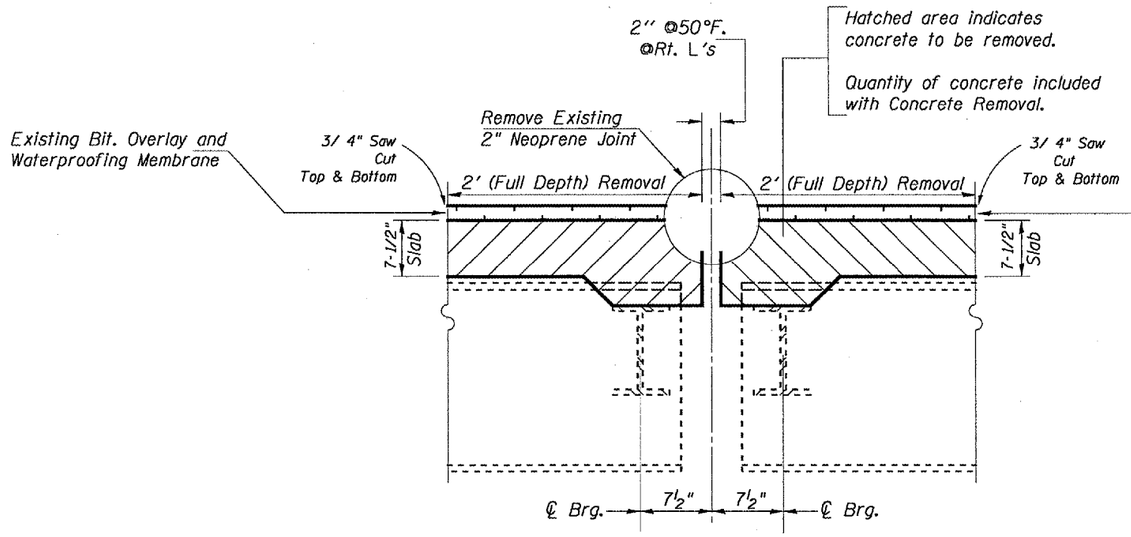

Pier #3 Detail

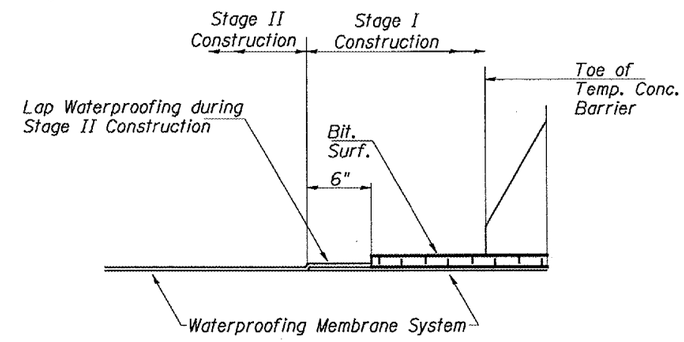

Waterproofing Treatment @ Stage Construction

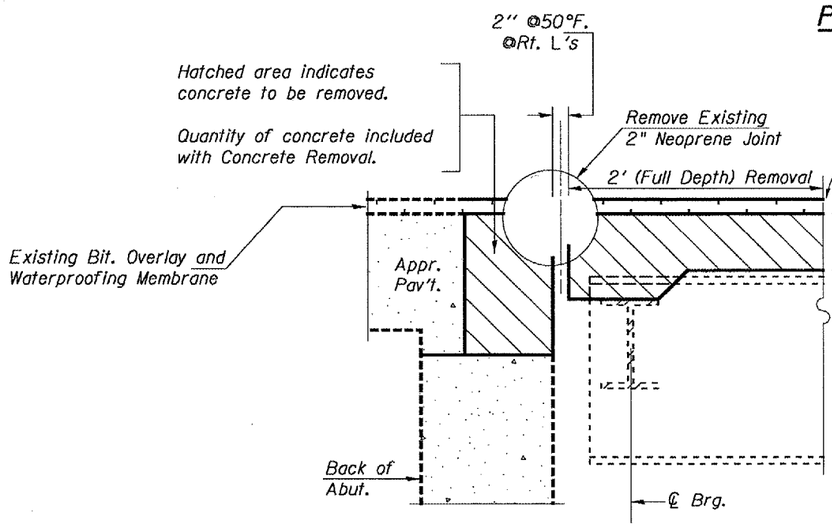

South Abutment Detail

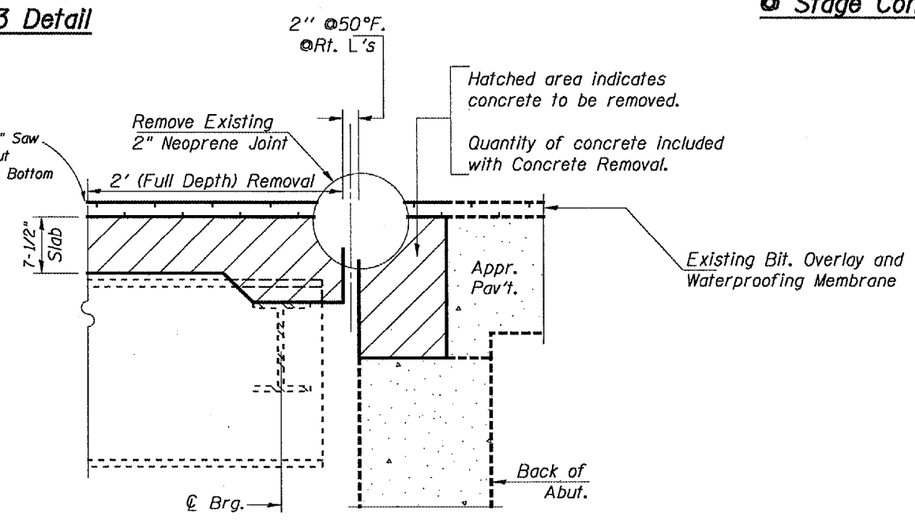

North Abutment Detail

Bill of Material

Concrete Removal	Cu. Yds.	23.0

Parapet concrete removal shown on sheet 11

NOTE

EXISTING REINFORCEMENT EXTENDING INTO THE REMOVAL AREA SHALL BE CLEANED, STRAIGHTENED, AND INCORPORATED INTO NEW CONSTRUCTION.

ANY REINFORCEMENT BARS THAT ARE TO REMAIN WHICH ARE DAMAGED DURING CONCRETE REMOVAL SHALL BE REPLACED WITH AN APPROVED BAR SPLICER OR ANCHORAGE SYSTEM AND COST WILL BE INCLUDED IN THE COST OF "CONCRETE REMOVAL".

PRIOR TO SAWCUTTING THERE SHALL BE A DEBRIS BARRIER CONSTRUCTED ON THE SLOPEWALL OF THE NORTH ABUTMENT PREVENTING CONCRETE FROM FALLING ANYWHERE NEAR OR ONTO THE RAILROAD R.O.W. DURING JOINT REMOVAL & REPLACEMENT.

REVISIONS	
NAME	DATE

ILLINOIS DEPARTMENT OF TRANSPORTATION

JOINT CONCRETE REMOVAL DETAIL

SCALE: VERT. HORIZ.

DATE 05-17-2004

DRAWN BY CEJ

CHECKED BY

PLOT DATE = $DATE$
FILE NAME = $$FILEL$$
PLOT SCALE = $$SCALE$$
PLOT SCALE = $$SCALE$$
REFERENCE = $$REF$$

...\SN072-0135 24&9overTP&WeastofM 12/3/2004 9:40:19 AM