76301

ROUTE NO.	SECTION	COUNTY	TOTAL SHEETS	SHEET NO.
FAP 586	60R-2, 37R-1	MADISON	502	234

SHEET 2 OF 2 SHEETS

02RP-111D6N NOV. 12, 2003

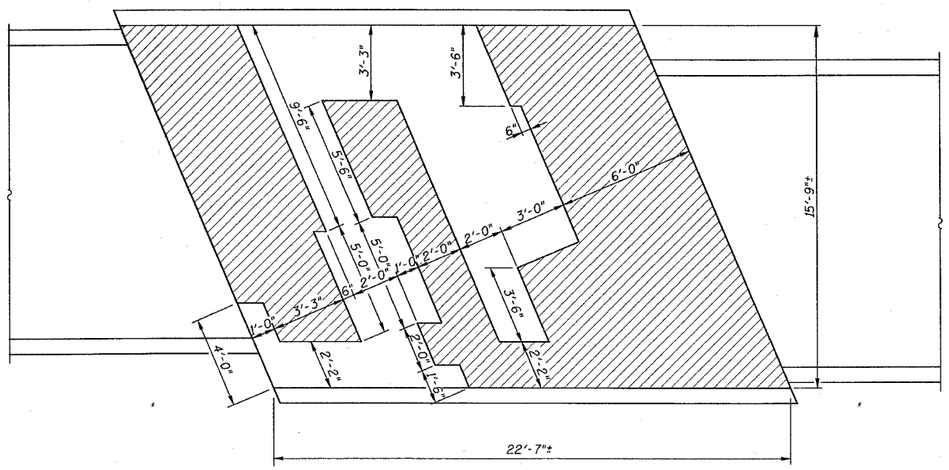

N

REFLECTED TOP SLAB REPAIR PLAN - ORIGINAL STRUCTURE

CLEANING AND PAINTING EXPOSED REBAR (SEE SPECIAL PROVISIONS) = 225 SQ. FT.
SEE TYPICAL REPAIR DETAIL.

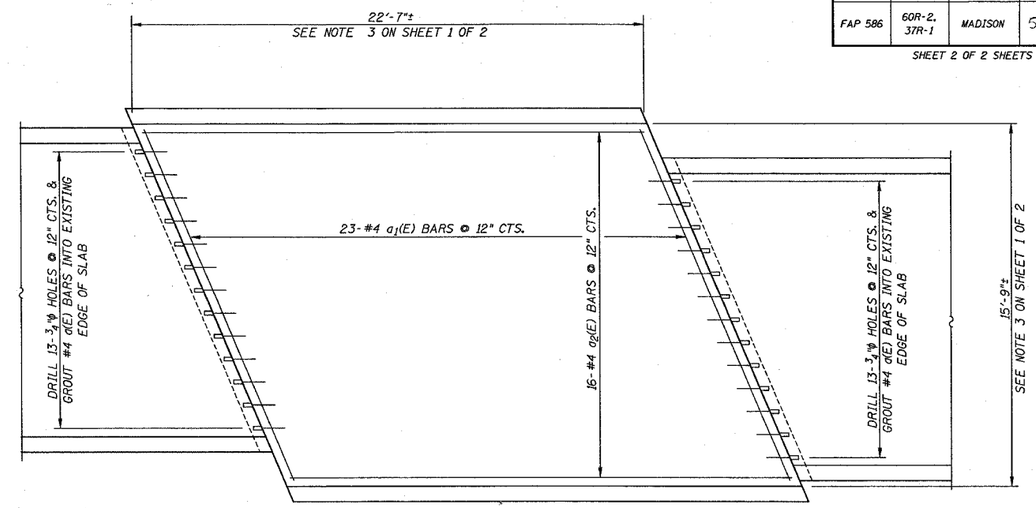

N

PLAN - ORIGINAL STRUCTURE

BAR LIST

Bar	No.	Size	Length	Shape
a(E)	26	#4	2'-0"	———
a1(E)	23	#4	17'-0"	———
a2(E)	16	#4	22'-3"	———
REINFORCEMENT BARS, EPOXY COATED			POUND	540

REINFORCEMENT BARS DESIGNATED (E) SHALL BE EPOXY COATED.

MIN. BAR LAP

#4 = 1'-1"

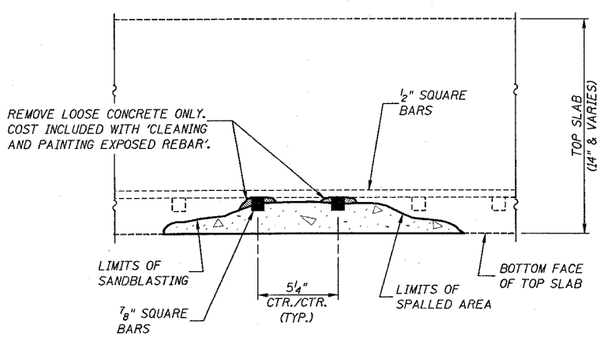

TYPICAL REPAIR DETAIL

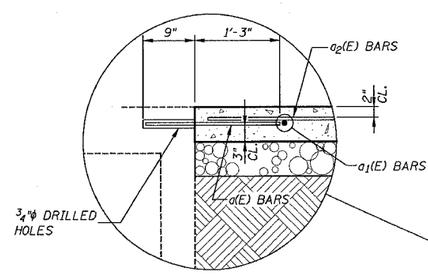

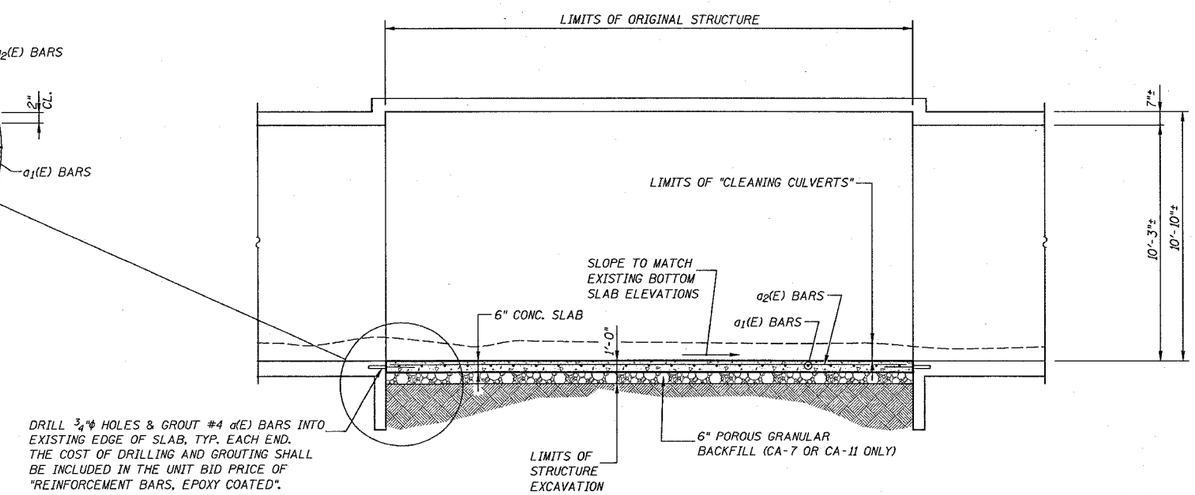

LONGITUDINAL SECTION - ORIGINAL CULVERT

DESIGNED:	B.G.H.
CHECKED:	L.D.G.
DRAWN:	K.H.L.
CHECKED:	B.G.H.

REPAIR DETAILS

F.A.P. ROUTE 586 (IL. 162)
OVER UNNAMED TRIBUTARY
SECTION 60R-2, 37R-1
MADISON COUNTY
S.N. 060-0403

H.M. & G. NO. 5003.111

HENRY, MEISENHEIMER & GENDE, INC. CONSULTING ENGINEERS, 1075 LAKE ROAD, P.O. BOX 70, CARLYLE, ILLINOIS 62231, PHONE 618-594-3711 WWW.HMGENGINEERS.COM