FAS ROUTE NO	SEC	COUNTY	TOTAL SHEETS	SHEET NO
—	*	DEKALB	26	22

ILLINOIS PROJECT BRS–
* 99–00103–01–BR

INTERIOR BEAM MOMENT TABLE

	FIVE SPAN UNIT				
	0.4 SPAN 1 0.6 SPAN 5	PIER 1 OR 4	0.5 SPAN 2 OR SPAN 4	PIER 2 OR 3	0.5 SPAN 3
Is (in)	2700	2700	2700	2700	2700
Ic (in)	8266	0	8266	0	8266
Ss (in)	222	222	222	222	222
Sc (in)	354	0	354	0	354
D.L. (k/ft.)	0.601	0.745	0.601	0.745	0.601
M D.L. (ft.–k)	100	152	43	120	60
s D.L. (k/ft.)	0.144		0.144		0.144
Ms D.L. (ft.–k)	28		17		19
M_{LL} (ft.–k)	487	205	410	201	409
M_{IMP} (ft.–k)	141	59	118	58	118
5/3(M_{LL}+M_{IMP})('k)	1047	441	881	431	878
Ma (ft.–k)	1527	772	1223	716	1243
Mu (ft.–k)	1983		1983		1983
fs D.L.(non–comp)(ksi)	5.4	8.2	2.3	6.5	3.2
fs D.L. (comp)(ksi)	1.1		0.7		0.7
fs 5/3 (LL+I)(ksi)	35.5	23.9	29.8	23.3	29.8
fs(overload)(ksi)	42.0	32.1	32.8	29.8	33.7
fs(total)(ksi)	–	41.7	–	38.7	–
VR (k)	50.3		55.1		55.1

Mu = FULL PLASTIC MOMENT CAPACITY FOR COMPACT, BRACED SECTION.

Ma = (APPLIED MOMENT) = 1.3 [M D.L. + Ms D.L. + 5/3 (M L.L. + I)]

I_s AND S_s ARE THE MOMENT OF INERTIA AND SECTION MODULUS OF THE STEEL SECTION USED IN COMPUTING f_s (TOTAL AND OVERLOAD).

I_c AND S_c ARE THE MOMENT OF INERTIA AND SECTION MODULUS OF THE COMPOSITE SECTION USED IN COMPUTING f_s (TOTAL AND OVERLOAD).

VR IS THE MAXIMUM L.L. + IMPACT SHEAR RANGE IN SPAN.

THE FULLY PLASTIC MOMENT CAPACITY (Mu) IS COMPUTED ACCORDING TO AASHTO 10.48.1 & 10.50.1.1.

f_s (TOTAL) IS THE SUM OF THE STRESSES DUE TO 1.3 [M D.L. + M_s D.L. + 5/3 (M L.L. + I)].

f (OVERLOAD) IS THE SUM OF THE STRESSES DUE TO M D.L. + M_s D.L. + 5/3 (M L.L. + I).

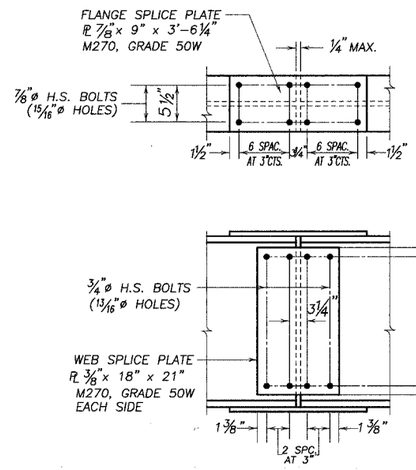

DETAIL OF SPLICE

(ALL SPLICE PLATES N.T.R.)

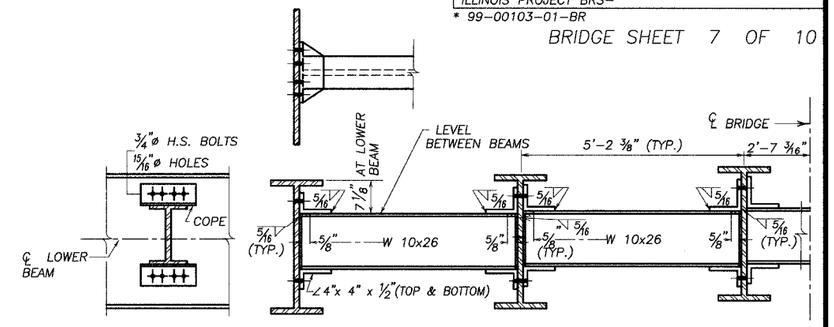

NOTE: HARDENED WASHERS SHALL BE REQUIRED OVER 15/16" ø HOLES FOR DIAPHRAGM CONNECTIONS. (2 PER BOLT)

DIAPHRAGM D

85 TOTAL REQUIRED

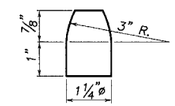

DETAIL OF PINTLE

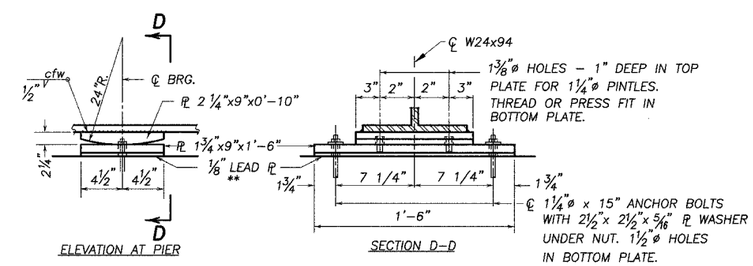

FIXED BEARING – PIERS

(24 REQUIRED)

** ELASTOMERIC NEOPRENE LEVELING PAD ALLOWED IN LIEU OF LEAD PLATE

INTERIOR BEAM REACTION TABLE

	ABUTMENTS	PIERS
$R_{D.L.}$ (k)	14.2	40.1
R_{LL} (k)	52.0	62.2
R_{IMP} (k)	15.4	14.1
R_{TOTAL} (k)	82.6	116.4

PROPOSED TOP OF BEAM ELEVATIONS

LOCATION \ BEAM No.	1&6	2&5	3&4
℄ BRG. ABUTS.	765.127	765.208	765.289
℄ BRG. PIERS	765.127	765.208	765.289

STRUCTURAL STEEL DETAILS
SECTION 99–00103–01–BR
KIRKLAND ROAD
DEKALB COUNTY
S.N. 019–3040