F.A.U. RTE.	SECTION	COUNTY	TOTAL SHEETS	SHEET NO.
6108	(70X)N & TS-1	LA SALLE	460	275
STA. 257+00		TO STA. 261+00		
FED. ROAD DIST. NO.	ILLINOIS	FED. AID PROJECT		

CONTRACT NO. 86603

DESIGN		
INT.	DATE	REASON

STAGE 4 TRAFFIC CONTROL AND CONSTRUCTION SEQUENCE STA. 252+00 TO STA. 271+00

1. CONTRACTOR SHALL PLACE ALL ADVANCED WARNING SIGNAGE PRIOR TO BEGINNING ANY CONSTRUCTION. (SEE ADVANCE SIGNING DETAILS)
2. TRAFFIC WILL BE SHIFTED TO THE EAST SIDE OF IL RTE. 351 AND THE SOUTH SIDE OF CIVIC ROAD AND N. 30th ROAD.
3. PLACE ALL TEMPORARY PAVEMENT MARKINGS AS SHOWN ON THE PLANS.
4. CONTRACTOR SHALL PROVIDE AND MAINTAIN TEMPORARY ENTRANCES WHEN REQUIRED DURING CONSTRUCTION.
5. REMOVE THE EXISTING PAVEMENT AND CONSTRUCT THE NEW PAVEMENT AS SHOWN ON THE PLANS.
6. TRAFFIC CONTROL AT THE INTERSECTION WILL REMAIN A 4 - WAY STOP CONDITION UNLESS OTHERWISE DIRECTED BY THE ENGINEER.

0 20 40
SCALE IN FEET

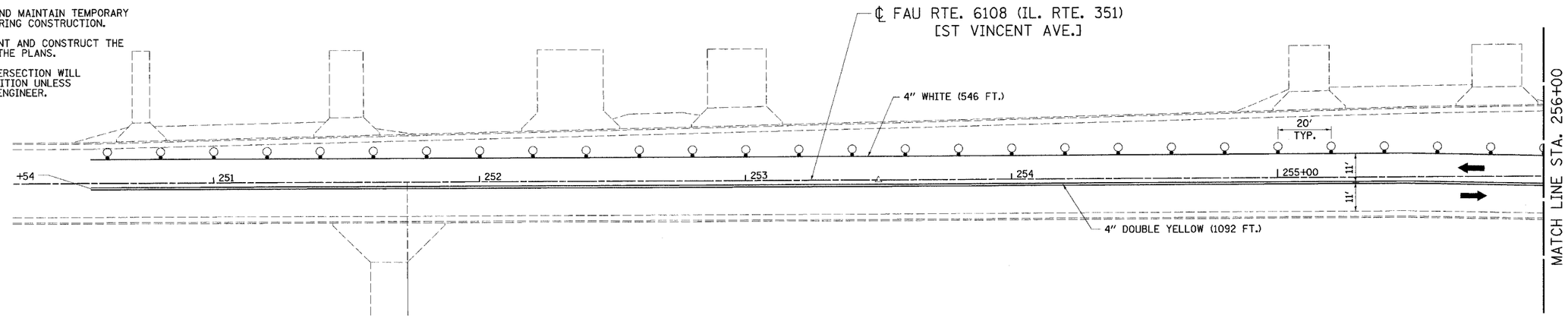

STAGE 4

0 20 40
SCALE IN FEET

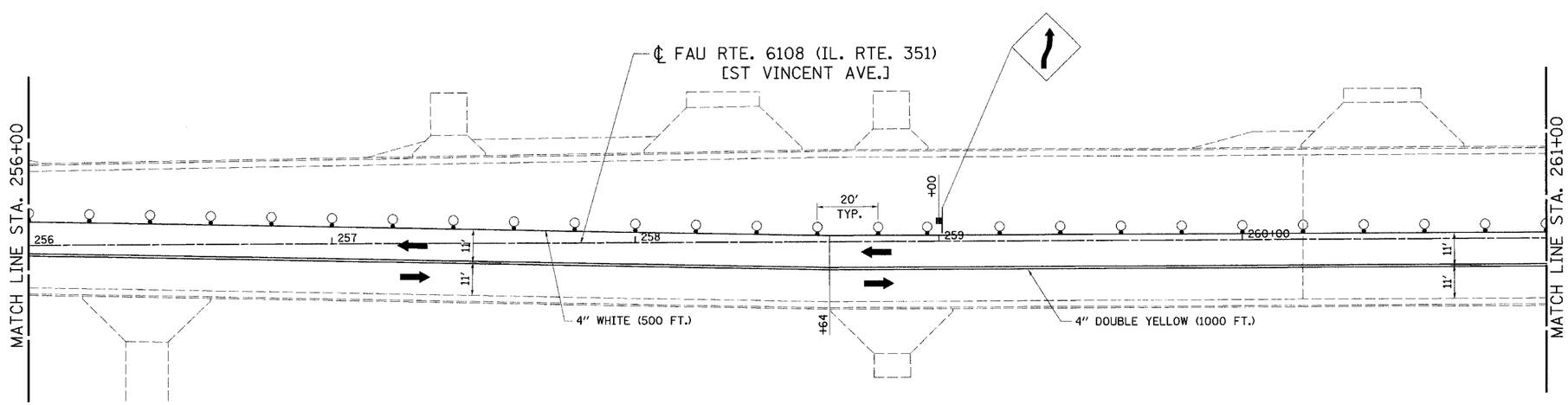

LEGEND

- DIRECTION OF TRAFFIC
- TYPE C BIDIRECTIONAL REFLECTOR
- TYPE III BARRICADE W/ FLASHING LIGHTS
- TYPE III BARRICADE
- DRUM OR BARRICADE WITH STEADY BURNING LIGHT
- WORK ZONE
- DRUM OR BARRICADE
- TEMPORARY WIDENING

PLOTS & CHECKS			
INT.	DATE	NO.	REASON

FILE NAME = $FILE$
PLOT SCALE = $SCALE$ DRV = $PLOTTER$
PLOT DATE = $DATE$
PLOT TIME = $TIME$
OPERATOR = $USER$

CHECKS		
INT.	DATE	REASON

REVISIONS	
NAME	DATE

ILLINOIS DEPARTMENT OF TRANSPORTATION

STAGE 4 TRAFFIC CONTROL & CONSTRUCTION STA. 257+00 TO STA. 261+00

FAU 6108 (IL RTE. 351)
SECTION (70X)N & TS-1
LA SALLE COUNTY

SCALE: VERT.
HORIZ.
DATE 05/07/03

DRAWN BY: Heb
DESIGNED BY: COLBROOK
CHECKED BY: COLBROOK

GREENE & BRADFORD, INC.
OF SPRINGFIELD
CONSULTING ENGINEERS
2121 NORTH GRAND AVENUE
SPRINGFIELD, ILLINOIS 62707
PROFESSIONAL DESIGN FIRM NO. 184-000576
PROFESSIONAL DESIGN FIRM NO. 184-000576 ILLINOIS DEPARTMENT OF TRANSPORTATION
(217) 782-8974, (217) 753-8337 FX, E-MAIL: = colbrook@greenebrad-springfield.com

COMPUTER FILE NO.
STAGE4-A-1
PROJECT 01194.b_n
02/17/04 Heb

IDOTPL-20 1"=20' 8/07/00

FAU 6108 (IL. RTE. 351) LA SALLE COUNTY