F.A.U. RTE.	SECTION	COUNTY	TOTAL SHEETS	SHEET NO.
6108	(70X)N & TS-1	LA SALLE	460	284
STA. 252+00		TO STA. 261+00		
FED. ROAD DIST. NO.	ILLINOIS	FED. AID PROJECT		

CONTRACT NO. 86603

DESIGN		
INT.	DATE	REASON

PLOTS & CHECKS			
INT.	DATE	NO.	REASON

CHECKS		
INT.	DATE	REASON

STAGE 5C TRAFFIC CONTROL AND CONSTRUCTION SEQUENCE STA. 252+00 TO STA. 271+00

1. CONTRACTOR SHALL PLACE ALL ADVANCED WARNING SIGNAGE PRIOR TO BEGINNING ANY CONSTRUCTION. (SEE ADVANCE SIGNING DETAILS)
2. TRAFFIC ON IL RTE. 351 WILL REMAIN THE SAME AS STAGE 5B. TRAFFIC WILL BE SHIFTED TO THE NORTH SIDE OF CIVIC ROAD AND N. 30th ROAD.
3. PLACE ALL TEMPORARY PAVEMENT MARKINGS AS SHOWN ON THE PLANS.
4. CONTRACTOR SHALL PROVIDE AND MAINTAIN TEMPORARY ENTRANCES WHEN REQUIRED DURING CONSTRUCTION.
5. REMOVE THE EXISTING PAVEMENT AND CONSTRUCT THE NEW PAVEMENT AS SHOWN ON THE PLANS.
6. TRAFFIC CONTROL AT THE INTERSECTION WILL REMAIN A 4 - WAY STOP CONDITION UNLESS OTHERWISE DIRECTED BY THE ENGINEER.

0 20 40
SCALE IN FEET

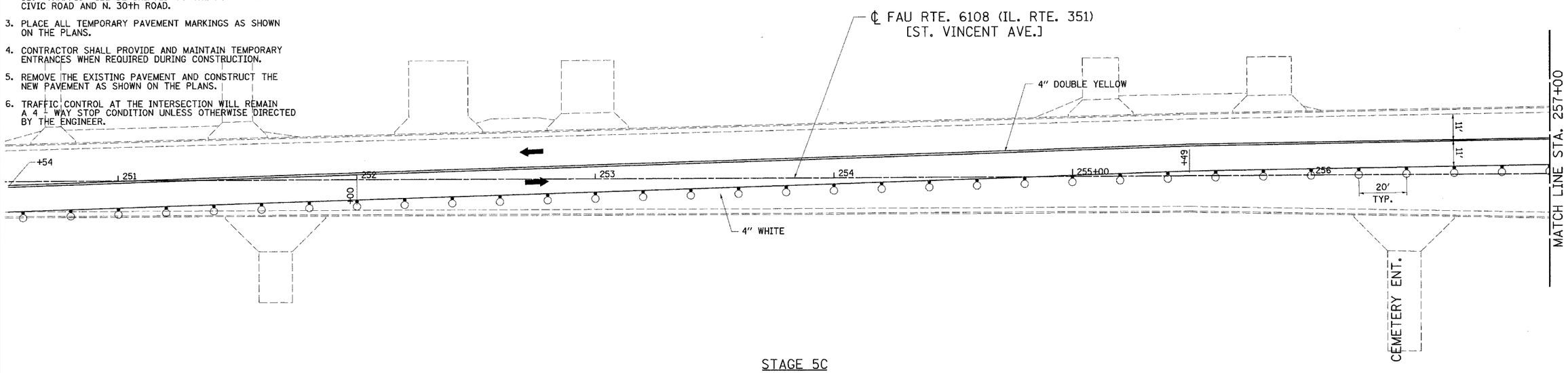

STAGE 5C

0 20 40
SCALE IN FEET

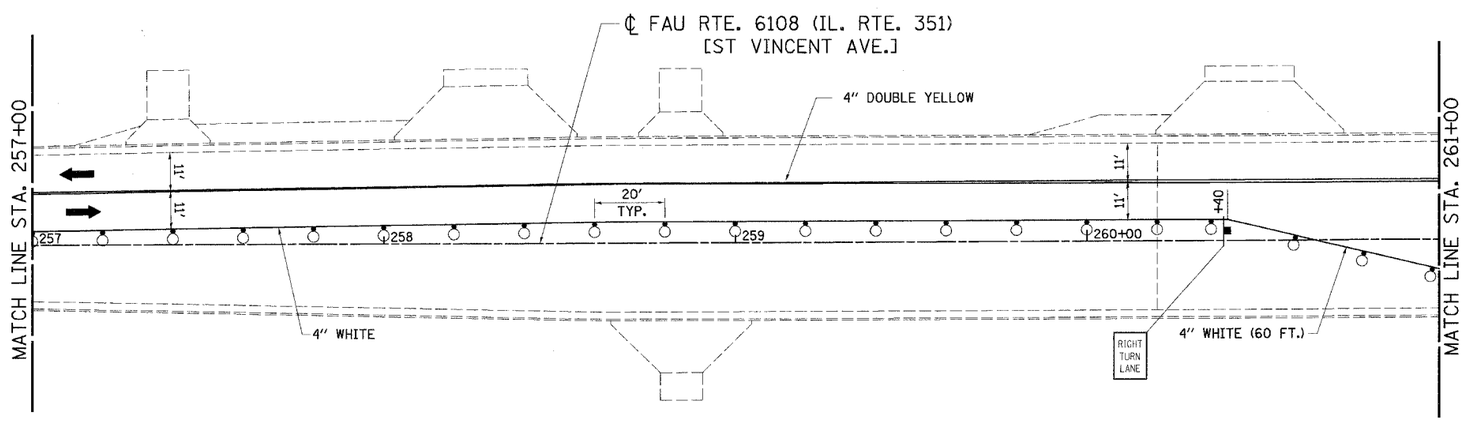

STAGE 5C

LEGEND

- DIRECTION OF TRAFFIC
- TYPE C BIDIRECTIONAL REFLECTOR
- TYPE III BARRICADE W/ FLASHING LIGHTS
- TYPE III BARRICADE
- DRUM OR BARRICADE WITH STEADY BURNING LIGHT
- WORK ZONE
- DRUM OR BARRICADE
- TEMPORARY WIDENING

REVISIONS	
NAME	DATE

ILLINOIS DEPARTMENT OF TRANSPORTATION

STAGE 5C TRAFFIC CONTROL & CONSTRUCTION

STA. 252+00 TO STA. 261+00

FAU 6108 (IL RTE. 351)
SECTION (70X)N & TS-1
LA SALLE COUNTY

SCALE: VERT. HORIZ.
DATE 05/07/03

DRAWN BY: Heb
DESIGNED BY: COLBROOK
CHECKED BY: COLBROOK

GREENE & BRADFORD, INC.
OF SPRINGFIELD
CONSULTING ENGINEERS
SPRINGFIELD, ILLINOIS 62701
PROFESSIONAL DESIGN FIRM NO. 184-000178
PROFESSIONAL & STRUCTURAL ENGINEERING CORPORATION
(217) 193-6444, (217) 789-8277 FILE E-MAIL: GBSGF@MONDEMOCRATGROUP.COM

COMPUTER FILE NO.
STAGE5-C-1
PROJECT 01194_b_n
02/17/04 Heb

FILE NAME = $FILE$
PLOT SCALE = $plotscale$ DRV = $PLOTTER$
PLOT DATE = $DATE$
PLOT TIME = $TIME$
OPERATOR = $USER$

IDOTPL-20 1"=20' 8/07/00