ROUTE NO.	SECTION	COUNTY	TOTAL SHEETS	SHEET NO.	SHEET NO. 14
F.A.P. RTE. 774	107BY	EFFINGHAM	344	386	29 SHEETS
FED. ROAD DIST. NO. 7	ILLINOIS	FED. AID PROJECT-			

CONTRACT NO. 94827

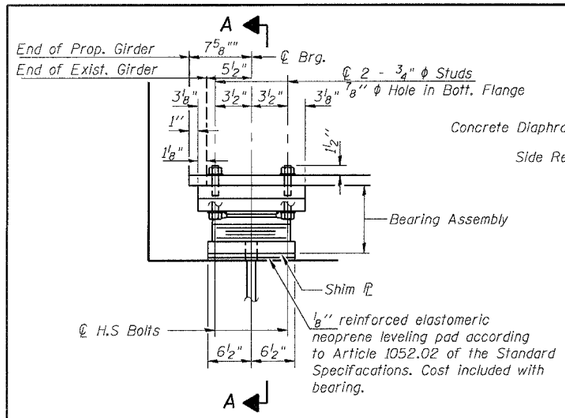

ELEVATION AT W. ABUT.

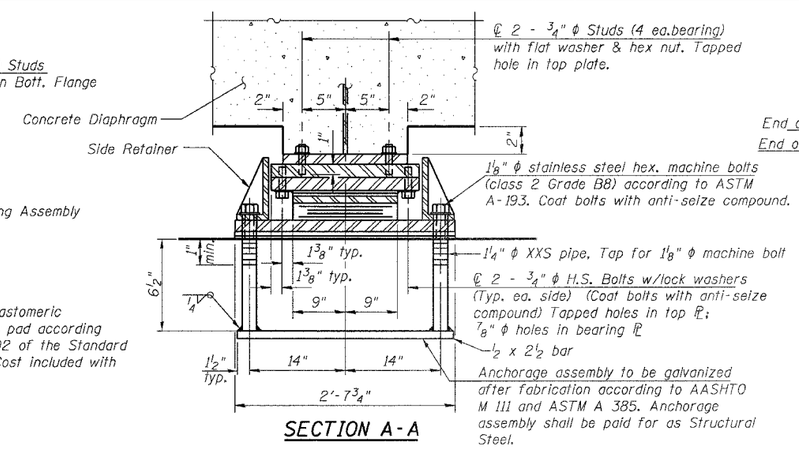

SECTION A-A

TYPE II ELASTOMERIC EXP. BRG. W. ABUT.

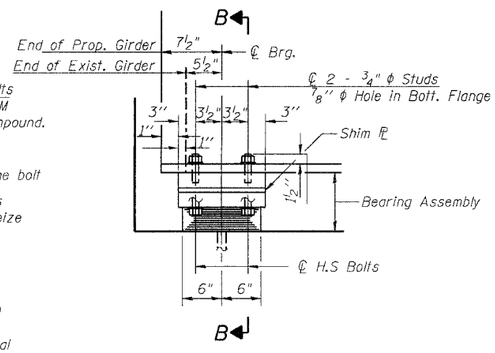

ELEVATION AT E. ABUT.

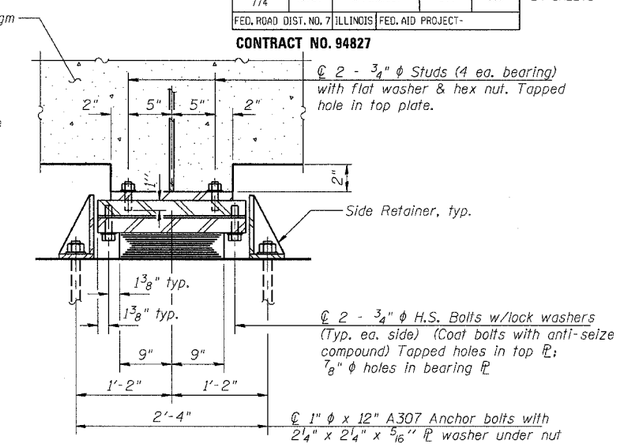

SECTION B-B

TYPE I ELASTOMERIC EXP. BRG. E. ABUT.

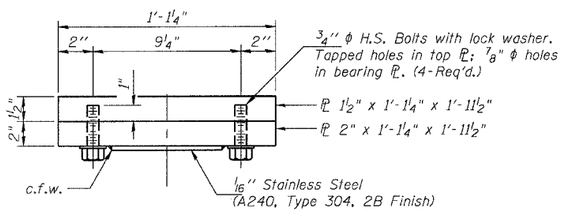

TOP BEARING ASSEMBLY

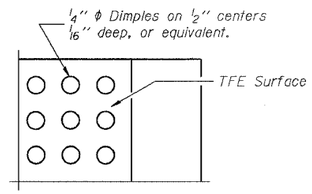

PLAN-TFE SURFACE

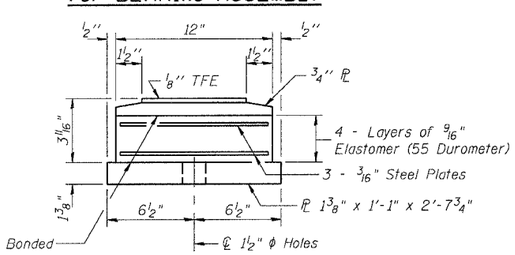

BOTTOM BEARING ASSEMBLY

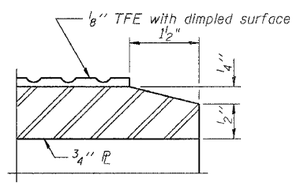

SECTION THRU TFE

Note: The 1/8" TFE sheet shall be bonded directly to the top steel plate with a two-component, medium viscosity epoxy resin, conforming to the requirements of the Federal Specification MMM-A-134, Type I. The bond agent shall be applied on the full area of the contact surfaces.

Bonding of 1/8" TFE sheet during vulcanizing process will be permitted provided the process and method of adjusting assembly height is approved by the Engineer.

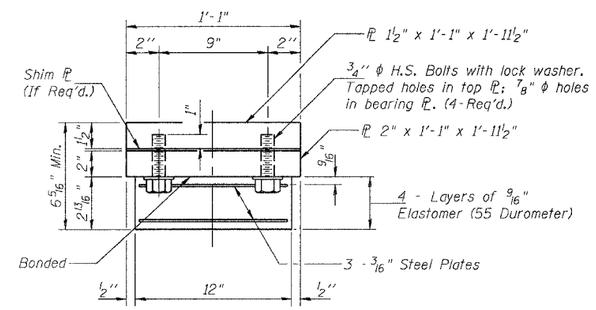

BEARING ASSEMBLY

Note: Shim plates shall not be placed under Bearing Assembly.

NOTES

See sheet 16 of 29 for Anchor Bolt installation. 7/8" ϕ Holes for 3/4" ϕ studs will be drilled in the field for existing girders. Cost included with Jacking and Cribbing.

The Structural Steel bearing plates of the elastomeric bearing assembly shall conform to the requirements of AASHTO M270, Grade 50.

BILL OF MATERIAL

Item	Unit	Total
Elastomeric Bearing Assembly Type I	Each	10
Elastomeric Bearing Assembly Type II	Each	10

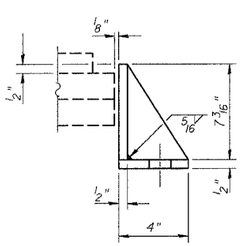

SIDE RETAINER W. ABUT.

Equivalent rolled angle with stiffeners will be allowed in lieu of welded plates. Weight included with Structural Steel.

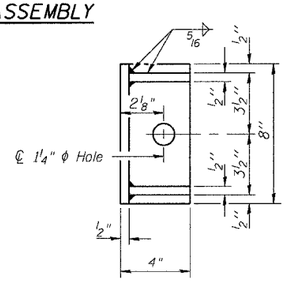

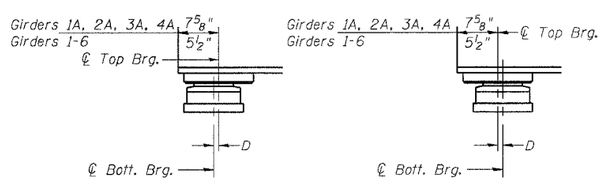

BELOW 50°F.
(Move bott. brg. away from fixed brg.)

ABOVE 50°F.
(Move bott. brg. toward fixed brg.)

SETTING ANCHOR BOLTS AT EXP. BRG.

D=1/8" per each 100' of expansion for every 15° temp. change from the normal temp. of 50°F.

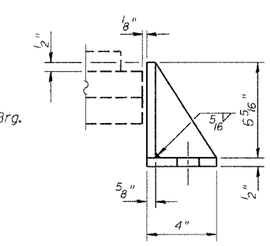

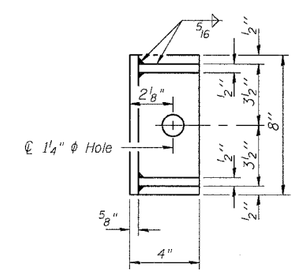

SIDE RETAINER E. ABUT.

Equivalent rolled angle with stiffeners will be allowed in lieu of welded plates. Weight included with Structural Steel.

SHEET TITLE: BEARING DETAILS

PROJECT: IL RTE. 32/33 OVER LITTLE WABASH RIVER
F.A.P. RTE. 774 SECTION 107BY
EFFINGHAM COUNTY
STATION 1011+50.17
STRUCTURE NO. 025-0078

PROJECT NO. 02017
SCALE
DATE
DRAWN BY CFC/TFG
CHECKED BY GJB/MCB

COOMBE-BLOXDORF P.C.
Engineers /Land Surveyors
Springfield, Illinois
Design Firm License No. 184-002703

DRAWING NO. 14 OF 29 SHTS

I-3-E2 2-19-03

...\FINAL PLANS\sheet-14.dgn 03/24/04 08:31:12 AM