STATE OF ILLINOIS
DEPARTMENT OF TRANSPORTATION

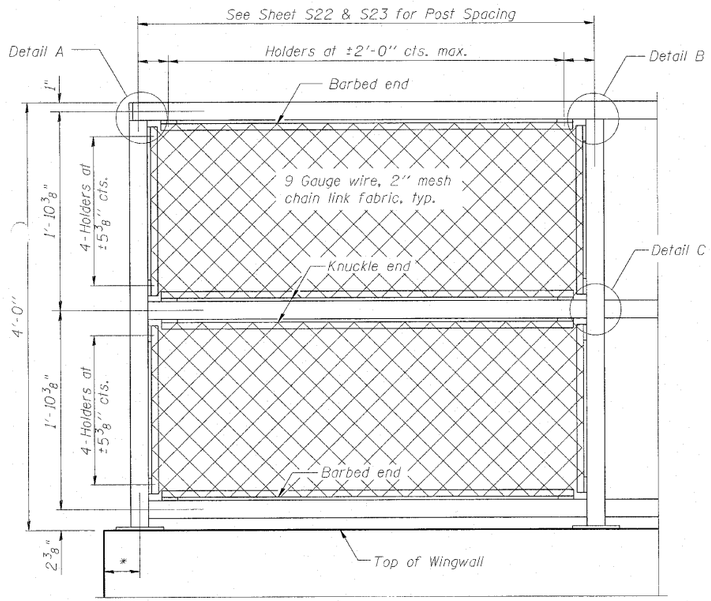


ELEVATION
(Inside Face)

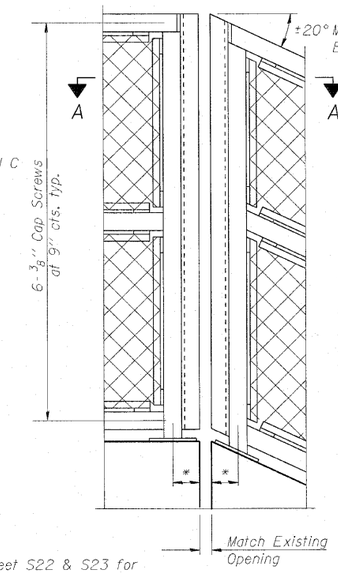


ELEVATION
(At Expansion Joint)

* Refer to Sheet S22 & S23 for Post Layout dimensions.

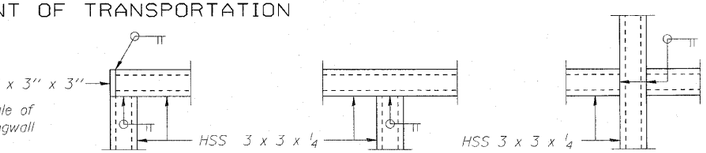


DETAIL A DETAIL B DETAIL C

Note:
All steel rail elements shall be galvanized according to Article 509.05 of the Standard Specifications.
Contractor to verify all dimensions in field prior to ordering materials.

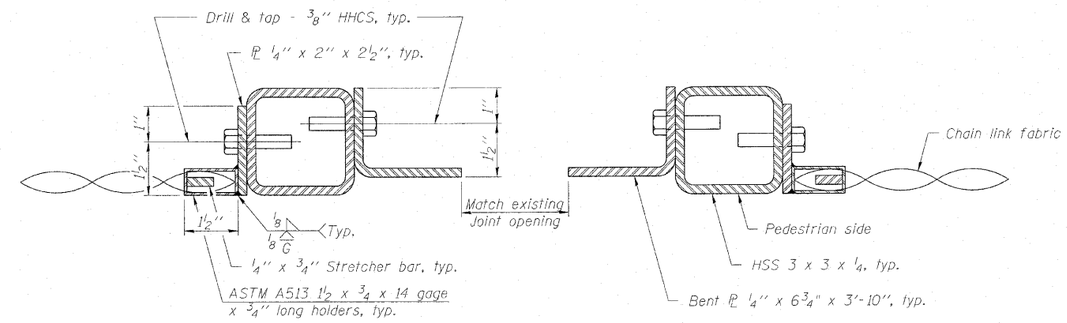


SECTION A-A

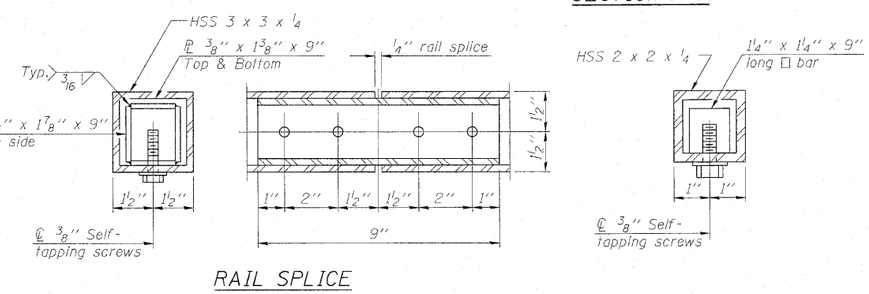


RAIL SPLICE

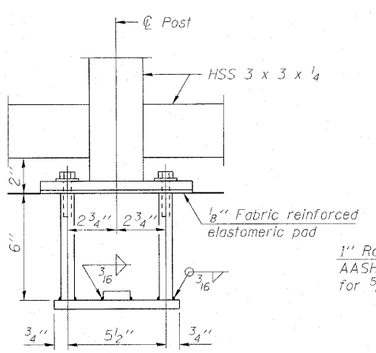


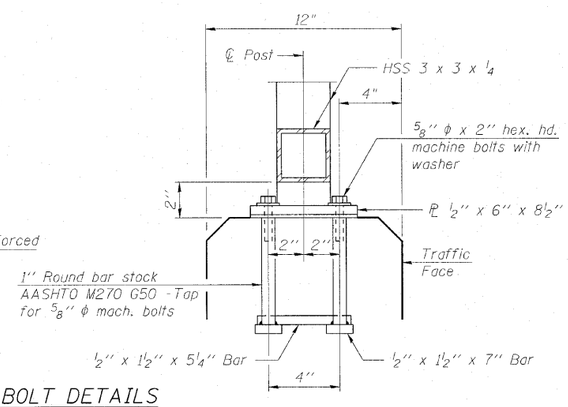


ANCHOR BOLT DETAILS

In lieu of the cast-in-place anchor device shown, the Contractor has the option of drilling and setting 5/8" ϕ anchor rods according to Article 509.06 of the Standard Specifications. Embedment shall be according to the manufacturer's specifications.

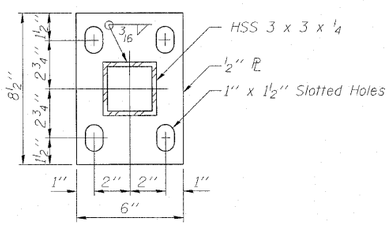


BASE PL

(10'-0" Maximum Post Spacing)

| | |
|---|---|
| DESIGNED | MAH |
| CHECKED | JMH |
| DRAWN | DR |
| CHECKED | JMH |

(Sheet 1 of 2)

BRIDGE FENCE RAILING (SPECIAL)
STRUCTURE NO. 016-0581

COLLINS ENGINEERS INC
123 N. WACKER DR., SUITE 300
CHICAGO, IL 60606
(312) 704-9300
ILLINOIS PROFESSIONAL DESIGN FIRM LICENSE NO. 184-000993

SHEET NO. S14 OF S27 SHEETS

| F.A.P. RTE. | SECTION | COUNTY | TOTAL SHEETS | SHEET NO. |
|---|---|---|---|---|
| 339 | 116-Y-2-BR-1 | COOK | 74 | 34 |
| | | CONTRACT NO. 60J00 | | |
| | ILLINOIS FED. AID PROJECT | | | |