STATE OF ILLINOIS
DEPARTMENT OF TRANSPORTATION

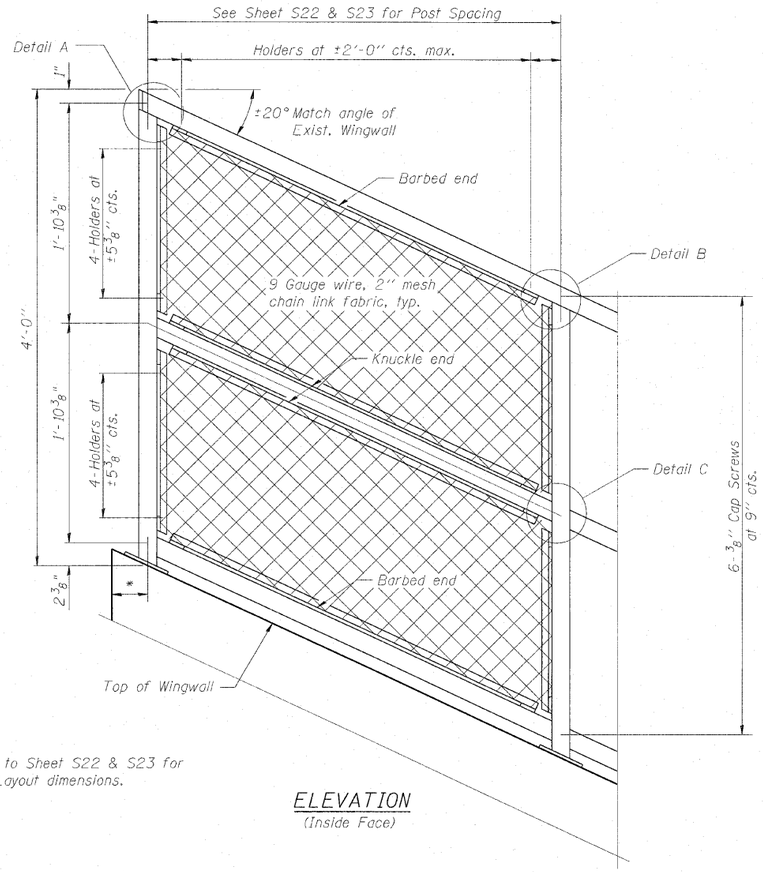

* Refer to Sheet S22 & S23 for Post Layout dimensions.

ELEVATION
(Inside Face)

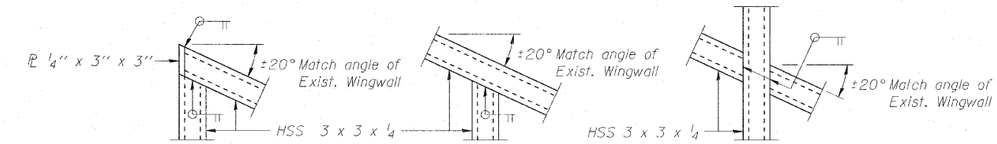

DETAIL A DETAIL B DETAIL C

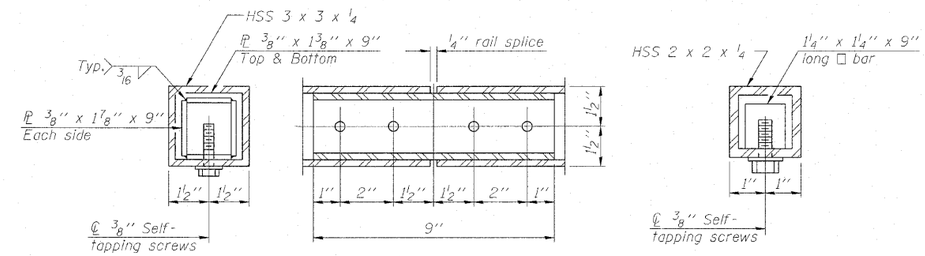

RAIL SPLICE

Note:
All steel rail elements shall be galvanized according to Article 509.05 of the Standard Specifications.
Contractor to verify all dimensions in field prior to ordering materials.

BILL OF MATERIAL

Item	Unit	Quantity
Bridge Fence Railing (Special)	Sq. Ft.	364

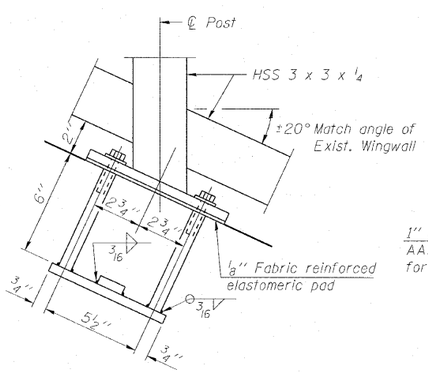

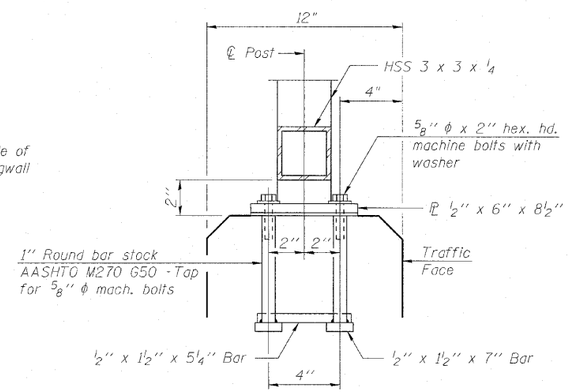

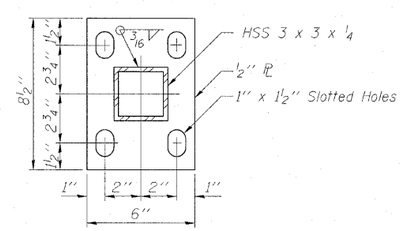

BASE PL

ANCHOR BOLT DETAILS

In lieu of the cast-in-place anchor device shown, the Contractor has the option of drilling and setting 5/8" ϕ anchor rods according to Article 509.06 of the Standard Specifications. Embedment shall be according to the manufacturer's specifications.

(10'-0" Maximum Post Spacing)

(Sheet 2 of 2)
BRIDGE FENCE RAILING (SPECIAL)
STRUCTURE NO. 016-0581

DESIGNED	MAH
CHECKED	JMH
DRAWN	DR
CHECKED	JMH

COLLINS ENGINEERS INC.
123 N. WACKER DR., SUITE 300
CHICAGO, IL 60606
(312) 704-9300
ILLINOIS PROFESSIONAL DESIGN FIRM LICENSE NO. 184-000993

SHEET NO. S15 OF S27 SHEETS

F.A.P. RTE.	SECTION	COUNTY	TOTAL SHEETS	SHEET NO.
339	116-Y-2-BR-1	COOK	74	35
		CONTRACT NO. 60J00		
		ILLINOIS FED. AID PROJECT		