STATE OF ILLINOIS
DEPARTMENT OF TRANSPORTATION

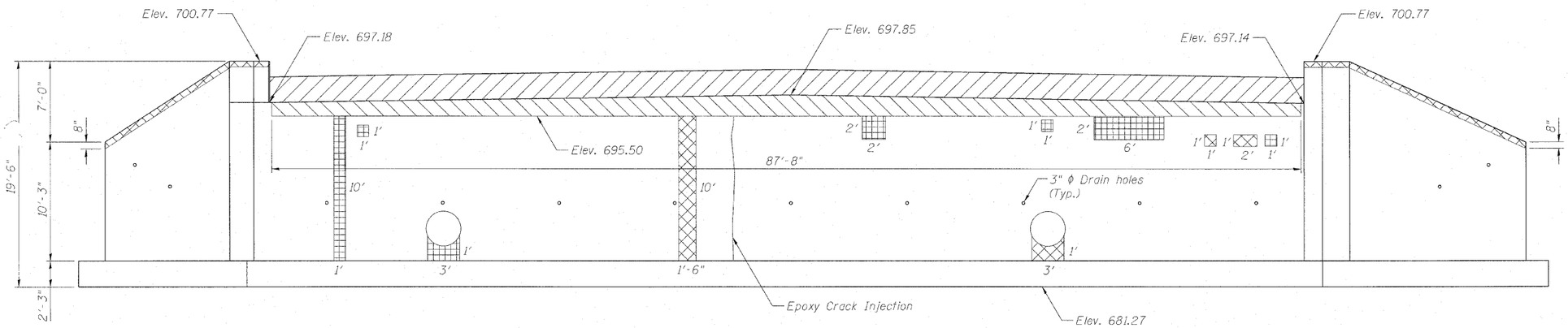

EXISTING WEST ABUTMENT ELEVATION

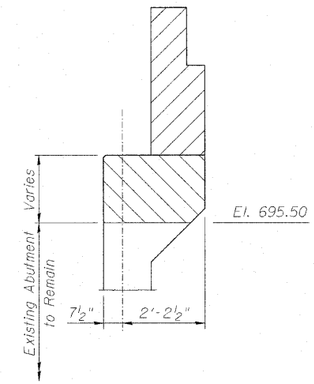

SECTION THRU WEST ABUTMENT

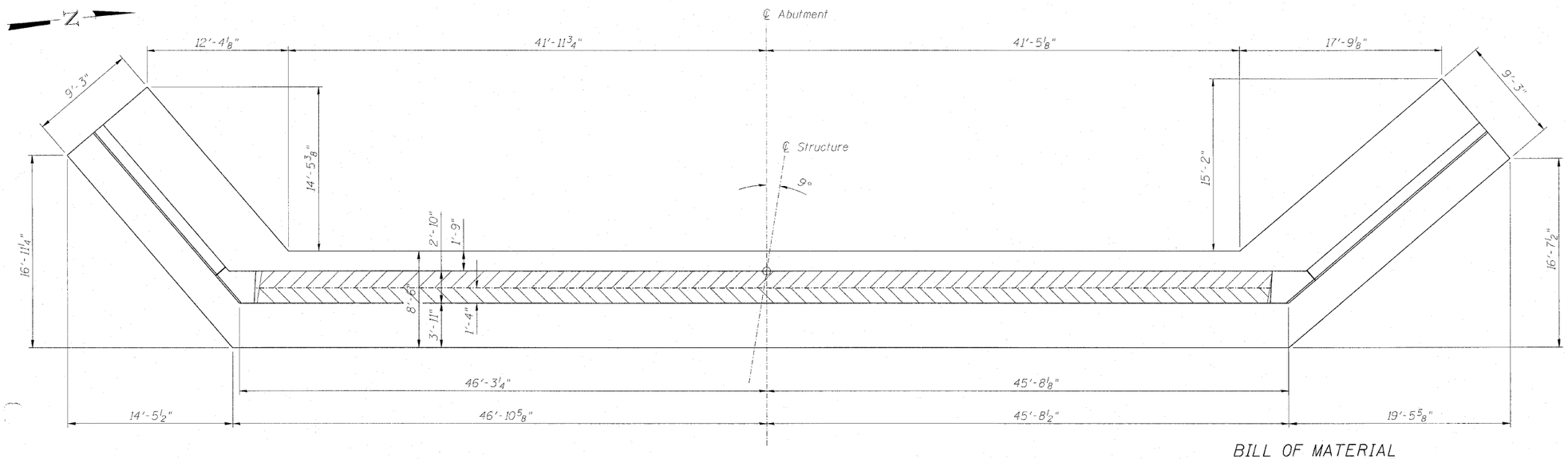

EXISTING WEST ABUTMENT PLAN

Note:
Clean and reuse existing bars at top of wingwalls. Cost included in item for "Structural Repair of Concrete (Depth greater than 5 inches)."

BILL OF MATERIAL
(For Two Abutments)

Item	Unit	Total
Concrete Removal	Cu. Yd.	64.4
Epoxy Crack Injection	Foot	15
Structural Repair of Concrete (Depth Greater than 5")	Sq. Ft.	128
Structural Repair of Concrete (Depth Less than 5")	Sq. Ft.	34

Legend:

- Concrete Removal (Backwall/Abutment)
- Concrete Removal (Beam Seat)
- Structural Repair of Concrete (Depth less than 5 inches)
- Structural Repair of Concrete (Depth greater than 5 inches)

EXISTING WEST ABUTMENT
STRUCTURE NO. 016-0581

DESIGNED	MAH
CHECKED	JMH
DRAWN	DR
CHECKED	JMH

COLLINS ENGINEERS INC.
123 N. WACKER DR., SUITE 300
CHICAGO, IL 60606
(312) 704-9300
ILLINOIS PROFESSIONAL DESIGN FIRM LICENSE NO. 184-000993

SHEET NO. S21 OF S27 SHEETS

F.A.P. RTE.	SECTION	COUNTY	TOTAL SHEETS	SHEET NO.
339	116-Y-2-BR-1	COOK	74	41
		CONTRACT NO. 60J00		
		ILLINOIS FED. AID PROJECT		