STATE OF ILLINOIS
DEPARTMENT OF TRANSPORTATION

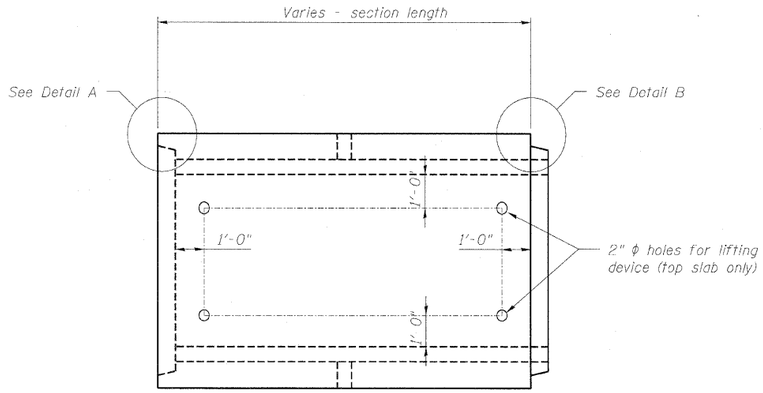

Note: Location of lifting holes may be varied as needed to clear reinforcement.

PLAN

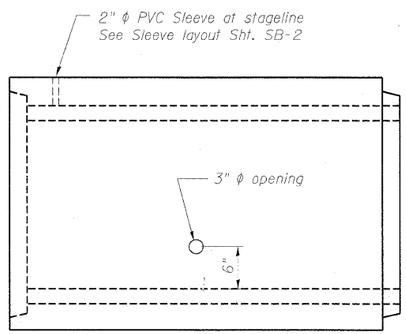

ELEVATION

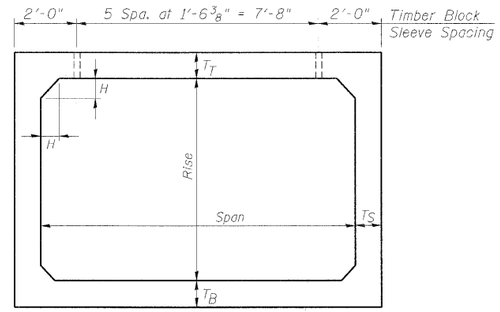

Note: The haunch dimension h, is equal to the wall thickness t_S.

TYPICAL BOX SECTION

Span, Feet	T_T, inches		T_B, inches		T_S, inches	
	M 259	M 273	M 259	M 273	M 259	M 273
3	4	7	4	6	4	4
4	5	7½	5	6	5	5
5	6	8	6	7	6	6
6	7	8	7	7	7	7
7	8	8	8	8	8	8
8	8	8	8	8	8	8
9	9	9	9	9	9	9
10	10	10	10	10	10	10
11	11	11	11	11	11	11
12	12	12	12	12	12	12

TYPICAL THICKNESSES

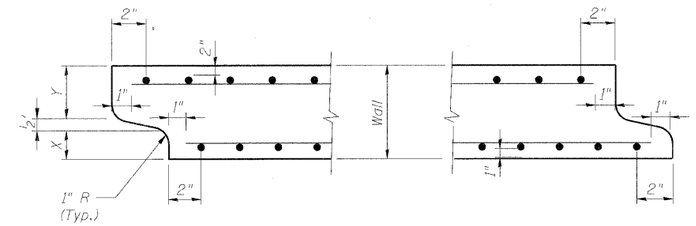

End detail is subject to variation by fabricator.

DETAIL A
(typ. inlet end)

DETAIL B
(typ. outlet end)

Note: Inlet and Outlet ends shall be compatible.

GENERAL NOTES:

Minimum cover for box culverts shall be 6".

PRECAST BOX SECTION
STRUCTURE NO. 022-2028

DESIGNED -	RJT
CHECKED -	EFS
DRAWN -	MB
CHECKED -	EFS

benesch
alfred benesch & company
Engineers • Surveyors • Planners
205 North Michigan Avenue, Suite 2400
Chicago, Illinois 60601
312-565-0450 Job No. 3733

SHEET NO. SB-4	F.A.P. RTE.	SECTION	COUNTY	TOTAL SHEETS	SHEET NO.
SB-7 SHEETS	365	(57 & 58)WRS-2	DUPAGE	681	396
			CONTRACT NO. 62419		
		ILLINOIS	FED. AID PROJECT		

$FILE$
$TIME$
12/3/2010