PROPOSED CONTROLLER SEQUENCE

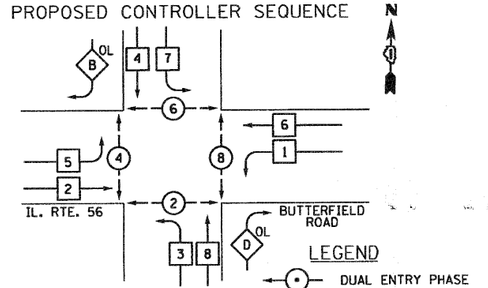

LEGEND

- DUAL ENTRY PHASE
- SINGLE ENTRY PHASE
- OVERLAP
- PEDESTRIAN PHASE
- NUMBER REFERS TO ASSOCIATED PHASE

PHASE DESIGNATION DIAGRAM

OVERLAP LETTER	=	PERMISSIVE PHASE	+	PROTECTED PHASE
B	=	4	+	5
D	=	8	+	1

PROPOSED EMERGENCY VEHICLE PREEMPTION SEQUENCE

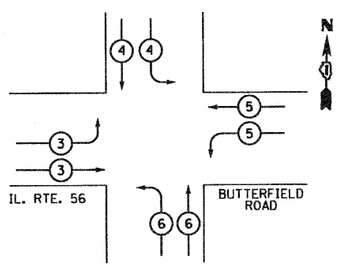

PROPOSED EMERGENCY VEHICLE PREEMPTORS				
EMERGENCY VEHICLE PREEMPTOR	3	4	5	6
MOVEMENT				

I.D.O.T. TRAFFIC SIGNAL INSTALLATION ELECTRICAL SERVICE REQUIREMENTS					TOTAL WATTAGE
TYPE	NO. OF LAMPS	WATTAGE INCAND.	WATTAGE LED	% OPERATION	
SIGNAL (RED)	24	135	17	0.50	204
(YELLOW)	24	135	25	0.25	150
(GREEN)	24	135	15	0.25	90
ARROW		135	12	0.10	
PED. SIGNAL	16	90	25	1.00	400
CONTROLLER	1	100	100	1.00	100
ILLUM. SIGN		252		0.05	
FLASHER				0.50	
ENERGY COSTS TO:				TOTAL =	944

ILLINOIS DEPARTMENT OF TRANSPORTATION
DIVISION OF HIGHWAYS / DISTRICT 1
201 WEST CENTER COURT / SCHAUMBURG, IL 60196-1096

ENERGY SUPPLY: CONTACT: MS. MIKKI WILLIAMS
PHONE: (630) 691-4721
COMPANY: COMED

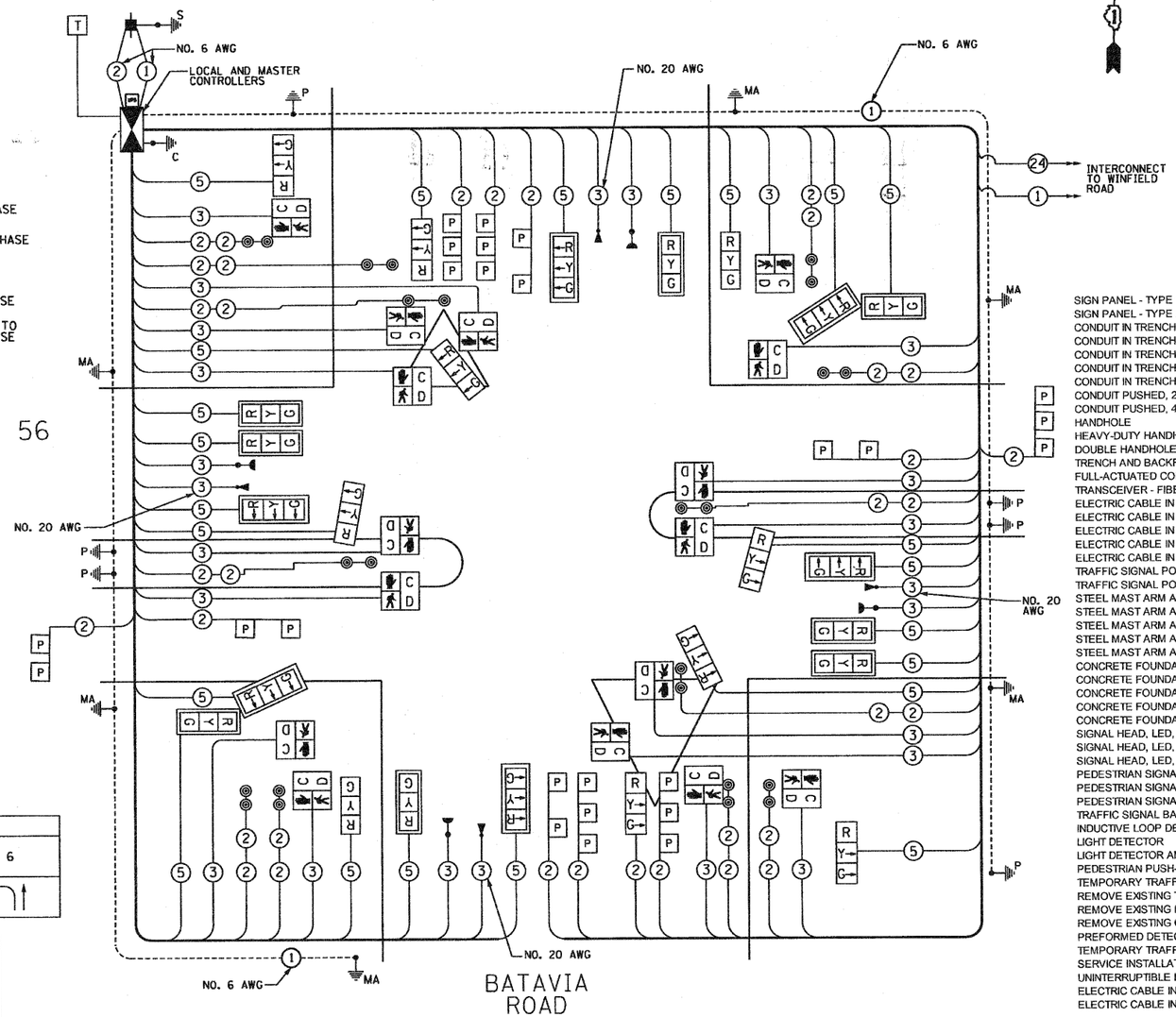

CABLE PLAN

SCHEDULE OF QUANTITIES

ITEM	UNIT	QUANTITY
SIGN PANEL - TYPE 1	SQ FT	55
SIGN PANEL - TYPE 2	SQ FT	30
CONDUIT IN TRENCH, 2" DIA., GALVANIZED STEEL	FOOT	580
CONDUIT IN TRENCH, 2 1/2" DIA., GALVANIZED STEEL	FOOT	213
CONDUIT IN TRENCH, 3" DIA., GALVANIZED STEEL	FOOT	44
CONDUIT IN TRENCH, 3 1/2" DIA., GALVANIZED STEEL	FOOT	29
CONDUIT IN TRENCH, 4" DIA., GALVANIZED STEEL	FOOT	77
CONDUIT PUSHED, 2" DIA., GALVANIZED STEEL	FOOT	53
CONDUIT PUSHED, 4" DIA., GALVANIZED STEEL	FOOT	991
HANDHOLE	EACH	6
HEAVY-DUTY HANDHOLE	EACH	2
DOUBLE HANDHOLE	EACH	4
TRENCH AND BACKFILL FOR ELECTRICAL WORK	FOOT	922
FULL-ACTUATED CONTROLLER AND TYPE V CABINET	EACH	1
TRANSCEIVER - FIBER OPTIC	EACH	1
ELECTRIC CABLE IN CONDUIT, SIGNAL NO. 14 2C	FOOT	2713
ELECTRIC CABLE IN CONDUIT, SIGNAL NO. 14 3C	FOOT	6222
ELECTRIC CABLE IN CONDUIT, SIGNAL NO. 14 5C	FOOT	6128
ELECTRIC CABLE IN CONDUIT, LEAD-IN, NO. 14 1 PAIR	FOOT	2962
ELECTRIC CABLE IN CONDUIT, SERVICE, NO. 6 2C	FOOT	28
TRAFFIC SIGNAL POST, GALVANIZED STEEL 10 FT.	EACH	2
TRAFFIC SIGNAL POST, GALVANIZED STEEL 14 FT.	EACH	4
STEEL MAST ARM ASSEMBLY AND POLE, 18 FT.	EACH	1
STEEL MAST ARM ASSEMBLY AND POLE, 22 FT.	EACH	1
STEEL MAST ARM ASSEMBLY AND POLE, 36 FT.	EACH	1
STEEL MAST ARM ASSEMBLY AND POLE, 44 FT.	EACH	2
STEEL MAST ARM ASSEMBLY AND POLE, 56 FT.	EACH	1
CONCRETE FOUNDATION, TYPE A	FOOT	24
CONCRETE FOUNDATION, TYPE C	FOOT	4
CONCRETE FOUNDATION, TYPE E 30-INCH DIAMETER	FOOT	33.5
CONCRETE FOUNDATION, TYPE E 36-INCH DIAMETER	FOOT	26
CONCRETE FOUNDATION, TYPE E 42-INCH DIAMETER	FOOT	21
SIGNAL HEAD, LED, 1-FACE, 3-SECTION, MAST-ARM MOUNTED	EACH	14
SIGNAL HEAD, LED, 1-FACE, 3-SECTION, BRACKET MOUNTED	EACH	6
SIGNAL HEAD, LED, 2-FACE, 3-SECTION, BRACKET MOUNTED	EACH	2
PEDESTRIAN SIGNAL HEAD, LED, 1-FACE, BRACKET MOUNTED WITH COUNTDOWN TIMER	EACH	6
PEDESTRIAN SIGNAL HEAD, LED, 2-FACE, BRACKET MOUNTED WITH COUNTDOWN TIMER	EACH	2
PEDESTRIAN SIGNAL HEAD, LED, 3-FACE, BRACKET MOUNTED WITH COUNTDOWN TIMER	EACH	2
TRAFFIC SIGNAL BACKPLATE, LOUVERED, ALUMINUM	EACH	14
INDUCTIVE LOOP DETECTOR	EACH	10
LIGHT DETECTOR	EACH	4*
LIGHT DETECTOR AMPLIFIER	EACH	1*
PEDESTRIAN PUSH-BUTTON	EACH	24
TEMPORARY TRAFFIC SIGNAL INSTALLATION	EACH	1
REMOVE EXISTING TRAFFIC SIGNAL EQUIPMENT	EACH	1
REMOVE EXISTING HANDHOLE	EACH	13
REMOVE EXISTING CONCRETE FOUNDATION	EACH	8
PREFORMED DETECTOR LOOP	FOOT	875
TEMPORARY TRAFFIC SIGNAL TIMINGS	EACH	1
SERVICE INSTALLATION, POLE MOUNT	EACH	1
UNINTERRUPTIBLE POWER SUPPLY	EACH	1
ELECTRIC CABLE IN CONDUIT, GROUNDING NO. 6 1C	FOOT	1460
ELECTRIC CABLE IN CONDUIT NO. 20 3/C, TWISTED, SHIELDED	FOOT	1662

* DENOTES 100% OF COST TO CITY OF WARRENVILLE

TS-18

FILE NAME = TS-22.dgn
PLOT DATE = 8/13/2010

SPAAN Tech, Inc.
311 S. Wacker Drive, Suite 2400
Chicago, Il 60606
phone: 312.277.8820
fax: 312.277.8826
web: www.SpaanTech.com

DESIGNED -	R.A.S.	REVISED -	
DRAWN -	D.L.	REVISED -	
CHECKED -	A.D.O.	REVISED -	
DATE -	AUGUST 2010	REVISED -	

STATE OF ILLINOIS
DEPARTMENT OF TRANSPORTATION

SCHEDULE OF QUANTITIES, CABLE PLAN, AND PHASE DESIGNATION DIAGRAM
IL ROUTE 56 (BUTTERFIELD ROAD) AND BATAVIA ROAD

SCALE: NONE | SHEET NO. OF SHEETS | STA. TO STA.

F.A.P. RTE.	SECTION	COUNTY	TOTAL SHEETS	SHEET NO.
365	(58&59) WRS-3	DuPAGE	466	301

CONTRACT NO. 62420

FED. ROAD DIST. NO. 1 | ILLINOIS | FED. AID PROJECT