F.A.P. RTE.	SECTION	COUNTY	TOTAL SHEETS	SHEET NO.
353	(12&13)WRS-3	WILL	1235	38
STA.		TO STA.		
FED. ROAD DIST. NO.	ILLINOIS	FED. AID PROJECT		

CONTRACT NO. 62479

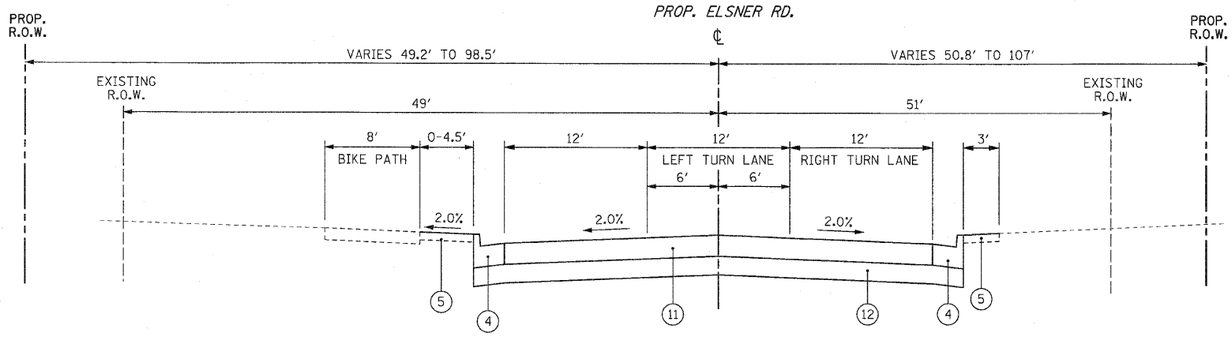

PROPOSED TYPICAL SECTION

ELSNER ROAD

SOUTH OF U.S. ROUTE 30
STA 397+49.8 TO STA 400+00

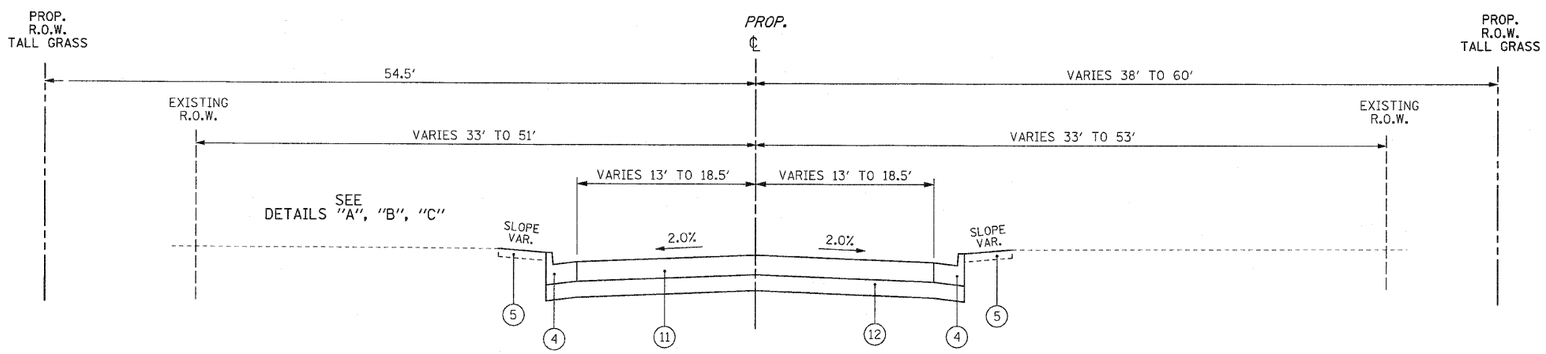

PROPOSED TYPICAL SECTION

HACKBERRY ROAD
NORTH OF U.S. ROUTE 30
STA 450+00 TO STA 452+34.6

PRESTANCIA DR.
SOUTH OF U.S. ROUTE 30

TALL GRASS DR.
NORTH OF U.S. ROUTE 30

OWENS RD.
SOUTH OF U.S. ROUTE 30

RIDGEMORE RD.
NORTH OF U.S. ROUTE 30

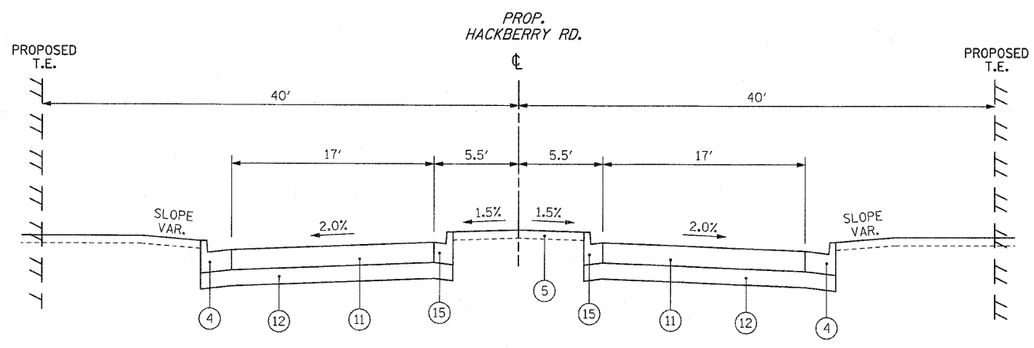

PROPOSED TYPICAL SECTION

HACKBERRY ROAD

SOUTH OF U.S. ROUTE 30
STA 447+81.3 TO STA 450+00

PROPOSED LEGEND

1. PORTLAND CEMENT CONCRETE PAVEMENT, 9¾" (JOINTED)
2. STABILIZED SUBBASE - HOT MIX ASPHALT, 4½"
3. AGGREGATE SUBGRADE 12", SPECIAL
4. COMBINATION CONCRETE CURB & GUTTER, TYPE B-6.24
5. TOPSOIL FURNISH AND PLACE, 4"
6. PORTLAND CEMENT CONCRETE SIDEWALK, 5"
7. HOT-MIX ASPHALT SURFACE COURSE, MIX "C", N50, 3"
8. TOPSOIL FURNISH AND PLACE, 8"
9. TOPSOIL FURNISH AND PLACE, 24"
10. CONCRETE MEDIAN, TYPE SB-6.24 (MODIFIED)
11. HOT-MIX ASPHALT PAVEMENT (FULL DEPTH), 9"
12. AGGREGATE SUBGRADE, 12"
13. LEVELING BINDER, (MACHINE METHOD), N50, ¾"
14. HOT-MIX ASPHALT SURFACE COURSE, MIX "C", N50, 1½"
15. COMBINATION CONCRETE CURB & GUTTER, TYPE B-6.12
16. HOT-MIX ASPHALT BINDER COURSE, IL-19.0, N50, 2¼"
17. HOT-MIX ASPHALT BINDER COURSE, IL-19.0, N50, 6¾"
18. HOT-MIX ASPHALT SURFACE COURSE, MIX "D", N50, 1½"
19. HOT-MIX ASPHALT BASE COURSE WIDENING, 6¾"
20. AGGREGATE BASE COURSE, TYPE B 6"
21. HOT-MIX ASPHALT SURFACE COURSE, MIX "C", N50, 2"
22. AGREGATE SHOULDERS, TYPE B 6"

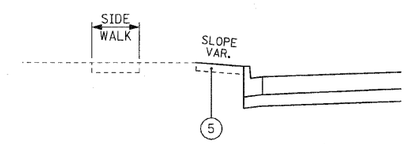

DETAIL "A"
PRESTANCIA DR.
SOUTH OF U.S. ROUTE 30 - LEFT AND RIGHT
TALL GRASS DR.
NORTH OF U.S. ROUTE 30 - LEFT AND RIGHT

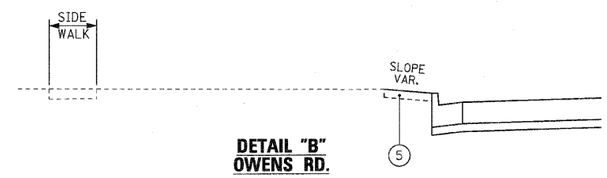

DETAIL "B"
OWENS RD.
SOUTH OF U.S. ROUTE 30 - LEFT
RIDGEMORE RD.
NORTH OF U.S. ROUTE 30 - LEFT

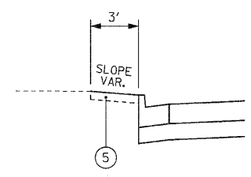

DETAIL "C"
HACKBERRY ROAD
NORTH OF U.S. ROUTE 30 - LEFT AND RIGHT
STA. 450+00 TO STA. 452+34.6

REVISIONS	
NAME	DATE

ILLINOIS DEPARTMENT OF TRANSPORTATION

TYPICAL SECTIONS

PROPOSED

SCALE : 1" = NTS
DATE : 10/12/2010
DRAWN BY : BEC
CHECKED BY : GB

DLZ
ENGINEERS · ARCHITECTS SCIENTISTS PLANNERS SURVEYORS
85 W. ALGONQUIN ROAD, SUITE 220 ARLINGTON HEIGHTS, IL 60005 TEL: (847) 640-0840