COUNTY	TOTAL SHEETS	SHEET NO.
KANE	131	73

CONSTRUCTION NOTE:

(1) INSTALL MANAGED ETHERNET SWITCH, TYPE 2 IN EXISTING TRAFFIC SIGNAL CONTROLLER.

SCHEDULE OF QUANTITIES

ITEM	UNIT	TOTAL
MAINTENANCE OF EXISTING TRAFFIC SIGNAL INSTALLATION	EACH	1
REMOVE EXISTING TRAFFIC SIGNAL EQUIPMENT	EACH	1
TERMINATE FIBER IN CABINET	EACH	12
SPLICE FIBER IN CABINET	EACH	12
ETHERNET MANAGED SWITCH, TYPE 2	EACH	1

THE TRAFFIC SIGNAL CONTROL EQUIPMENT FOR THIS PROJECT SHALL BE "EAGLE" TO MATCH THE EXISTING ADJACENT SYSTEM.

NOTE: ALL TRAFFIC SIGNAL POSTS, POLES, MAST ARM ASSEMBLY, CONTROLLER CABINET, SHROUDS, LIGHTING MAST ARMS AND LUMINAIRES SHALL BE POWDER COATED "DARK BRONZE."

CABLE PLAN LEGEND

EXISTING / PROPOSED

- 8" (200mm) TRAFFIC SIGNAL SECTION
- 12"(300mm) TRAFFIC SIGNAL SECTION
- 12"(300mm) PEDESTRIAN SIGNAL SECTION
- 12"(300mm) PEDESTRIAN SIGNAL SECTION
- CONTROLLER CABINET
- SERVICE INSTALLATION
- TELEPHONE CONNECTION
- MAGNETIC DETECTOR
- EMERGENCY VEHICLE LIGHT DETECTOR
- CONFIRMATION BEACON
- PREMPTION DETECTOR
- VEHICLE DETECTOR, INDUCTION LOOP
- DENOTES NUMBER OF CONDUCTORS. ALL CABLE NO.14 EXCEPT AS INDICATED. ALL LOOP DETECTOR LEADS TO BE SHIELDED.
- SIGNAL FACE WITH BACKPLATE (* INDICATES PROGRAMMED HEAD)
- RAILROAD CONTROL CABINET
- ILLUMINATED SIGN, FIBER OPTIC AND LEFT TURN*
- ILLUMINATED SIGN, FIBER OPTIC AND RIGHT TURN*
- GROUND ROD AT HANDHOLE (H), MOUNT HANDHOLE OVER CONTROLLER (C)
- GROUND ROD AT MAST ARM OR MAST ARM POLE (MA)
- GROUND ROD AT ELECTRIC SERVICE INSTALLATION
- (3) GROUND CABLE IN CONDUIT, NO.6 SOLID COPPER SCREEN
- (24) ALL 62.5/125 MM SCF & SM IOF, FIBER OPTIC CABLE
- (C) AC, 8281 COAXIAL CABLE
- VIDEO DETECTION CAMERA
- (T) DOME P.T.Z. CAMERA
- LUMINAIRE, SODIUM VAPOR, HORIZ. MOUNT PEDESTRIAN FUNT., SIR M, 120 V BALLAST

NOTE: ALL NEW GROUND RODS SHALL BE 5/8" X 10'-0" LONG COPPER CLAD. THE COST SHALL BE INCIDENTAL TO THE COST OF INSTALLATION.

CABLE PLAN

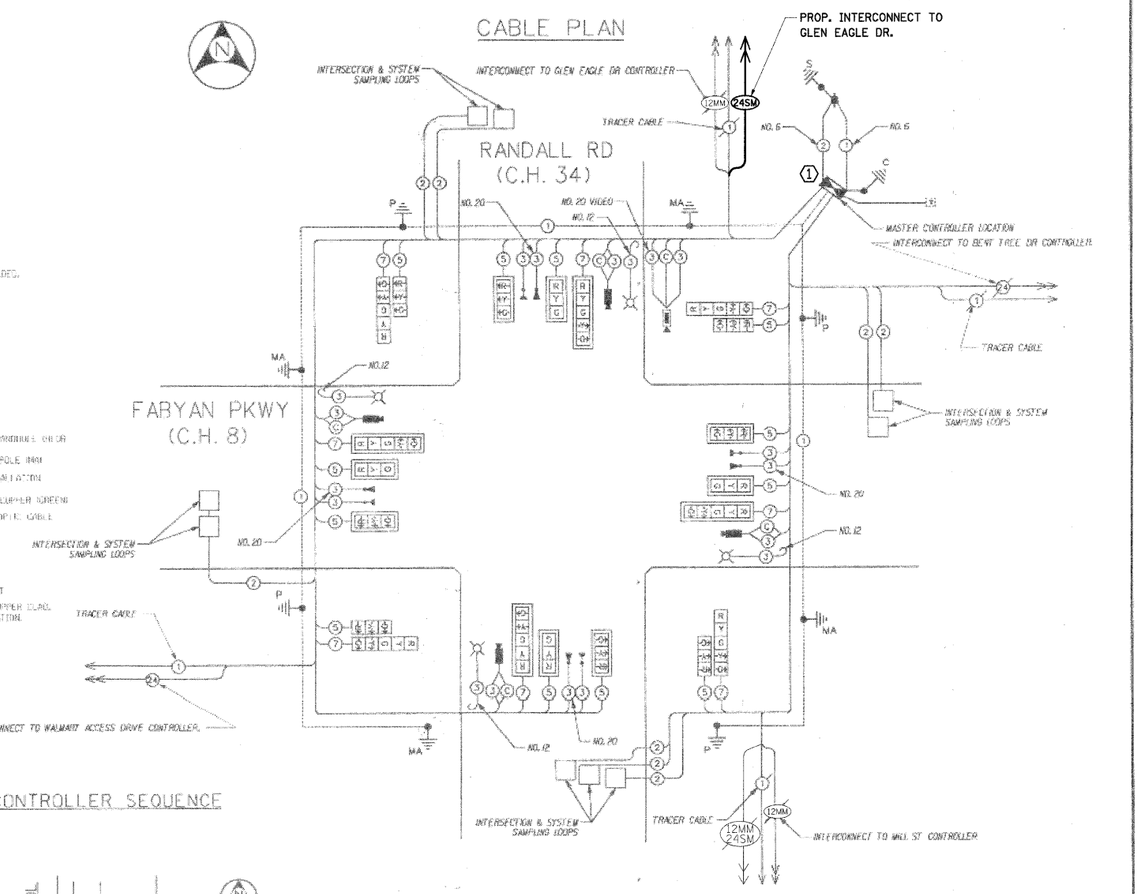

RIGHT TURN OVERLAP PHASE DESIGNATION

OVERLAP LETTER		PROTECTED PHASE
A	=	3
B	=	5
C	=	7
D	=	1

CONTROLLER SEQUENCE

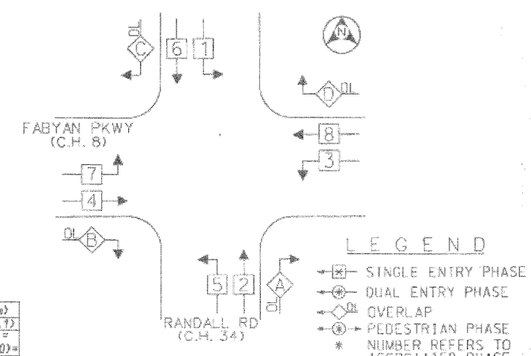

PHASE DESIGNATION DIAGRAM

EMERGENCY VEHICLE PREEMPTION SEQUENCE

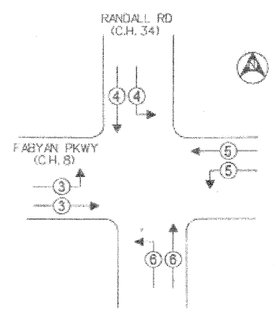

EMERGENCY VEHICLE PREEMPTORS				
EMERGENCY VEHICLE PREEMPTOR	3	4	5	6
MOVEMENT				

I.D.O.T. TRAFFIC SIGNAL INSTALLATION ELECTRICAL SERVICE REQUIREMENTS					TOTAL WATTAGE
		WATTAGE			
TYPE	NO. OF LAMPS	XINCAND	LED	X% OPERATIONS	
SIGNAL (RED)	20	135	17	0.50	170
(YELLOW)	12	135	25	0.25	75
(GREEN)	12	135	15	0.25	45
ARROW	32	135	12	0.10	39
PED. SIGNAL		90	25	1.00	
CONTROLLER	1	100	100	1.00	100
ILLUM. SIGN		84		0.05	
LUMINAIRE	4	310		0.50	620
FLASHER				0.50	
ENERGY COSTS TO:				TOTAL =	1049

CITY OF GENEVA
1800 SOUTH ST
GENEVA, ILLINOIS 60134

ENERGY SUPPLY - CONTACT: MS. JENNIFER HILKEMAN
PHONE: (630) 232-1503
COMPANY: CITY OF GENEVA

ALL INDICATIONS SHALL BE LED

RESTORATION OF WORK AREA. RESTORATION OF THE TRAFFIC SIGNAL WORK AREA SHALL BE INCIDENTAL TO THE RELATED PAY ITEM SUCH AS FOUNDATION, CONDUIT, HANDHOLE, TRENCH, AND BACKFILL, ETC., AND NO EXTRA COMPENSATION SHALL BE ALLOWED. ALL ROADWAYS SURFACES SUCH AS SHOULDERS, MEDIAN, SIDEWALKS, PAVEMENT, ETC. SHALL BE REPLACED IN KIND. ALL DAMAGE TO MOWED LAWNS SHALL BE REPLACED WITH AN APPROVED SOD, AND ALL DAMAGE TO UNMOWED FIELDS SHALL BE SEEDED IN ACCORDANCE WITH STANDARD SPECIFICATIONS 252 AND 250 RESPECTIVELY.

FOUNDATION (DEPTH)	FT. (m)	CABLE SLACK	FT. (m)	VERTICAL	FT. (m)
TYPE A - POST	4 (1.2)	HANDHOLE	6.5 (2.0)	ALL FOUNDATIONS	3.5 (1.1)
D - CONTROLLER	4 (1.2)	DOUBLE HANDHOLE	13 (4.0)	MAST ARM (L) POLE	20'+L-2 = (6.1+L-1.0)=
E - M ARM POLE		SIGNAL POST	2 (1.0)		
24" (600mm)	10 (3.0)	CONTROLLER CAB.	1 (0.5)	BRACKET MOUNTED	13 (4.0)
30" (750mm)	15 (4.6)	FIBER OPTIC	13 (4.0)	PED. PUSHBUTTON	4 (1.2)
		ELECTRIC SERVICE	1 (0.5)	ELECTRIC SERVICE	13.5 (4.1)
		GROUND CABLE	1 (0.5)	SERVICE TO GROUND	13.5 (4.1)
				POST MOUNTED	6 (1.8)

METRO TRANSPORTATION GROUP, INC.
TRAFFIC ENGINEERING, TRANSPORTATION PLANNING AND SIGNAL SYSTEMS/DESIGN
1300 GREENBROOK, HANOVER PARK, IL 60133 PH# 630 213-1000

REVISIONS		
NO.	DATE	DESCRIPTION

CABLE PLAN, PHASE DESIGNATION DIAGRAM AND SCHEDULE OF QUANTITIES

RANDALL RD (C.H. 34) @ FABYAN PKWY (C.H. 8)
BATAVIA/GENEVA, ILLINOIS

FILE NAME: 11_cp_con.dgn
DATE: JAN. 30, 2004
PROJECT NO.: H0302-26

CHRISTOPHER B. BURKE ENGINEERING LTD.
9575 West Higgins Road, Suite 600
Rosemont, Illinois 60018
(847) 823-0500

PLAN — NOTE BOOK NO. ____ — SURVEYED ____ PLOTTED ____ HORIZ. CHECKED ____ RT. OF WAY CHECKED ____ CADD FILE NAME ____ — BY ____ DATE ____

PROFILE — NOTE BOOK NO. ____ — SURVEYED ____ PLOTTED ____ GRADES CHECKED ____ B.M. NOTED ____ STRUCTURE NOTATNS CHKD ____ — BY ____ DATE ____

FILE NAME = N:\kanecounty\080673\Traffic\031_CAB_Randall-Fabyan Pkwy.dgn	USER NAME = FPACIONE	DESIGNED - ABR	REVISED -
		DRAWN - FCP	REVISED -
	PLOT SCALE = NOT TO SCALE	CHECKED - MJT	REVISED -
	PLOT DATE = 11/3/2010	DATE - AUGUST 31, 2010	REVISED -

STATE OF ILLINOIS
DEPARTMENT OF TRANSPORTATION

SCHEDULE OF QUANTITIES, CABLE PLAN, PHASE DESIGNATION DIAGRAM AND EMERGENCY VEHICLE PREEMPTION SEQUENCE
RANDALL ROAD AND FABYAN PARKWAY

SCALE: | SHEET NO. OF SHEETS | STA. -- TO STA. --

F.A.P. RTE.	SECTION	COUNTY	TOTAL SHEETS	SHEET NO.
336	09-00237-02-TL	KANE	100	31

CONTRACT NO. 63525
ILLINOIS FED. AID PROJECT