EXISTING TYPICAL SECTION F.A.I. 39

STA. 235+00.00 TO STA. 377+24.54

STATION EQUATION

STA. 377+24.54 (BK.) =
STA. 377+00.00 (AH.)

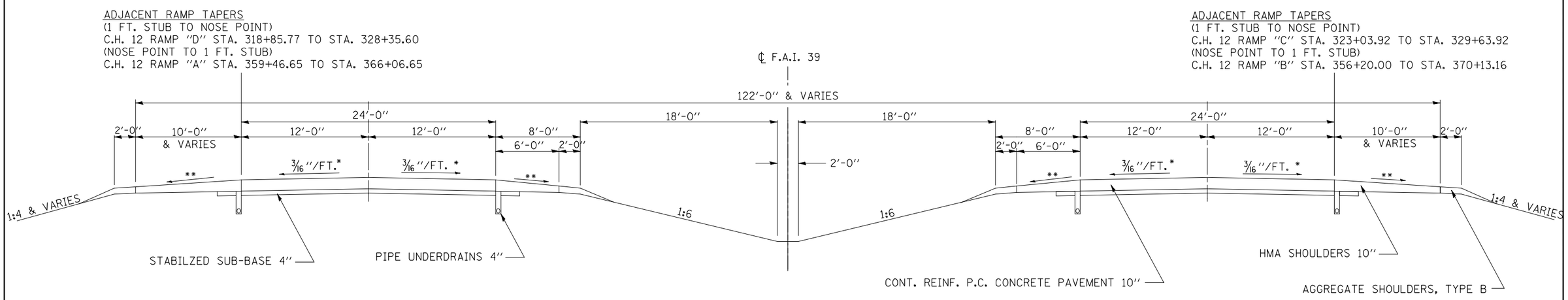

* SLOPE VARIES FOR SUPERELEVATION IN CURVES

** SLOPE VARIES IN SUPERELEVATION WITH MAXIMUM OF 0.08 FT/FT DIFFERENCE

FILE NAME =	USER NAME = bucklesjj	DESIGNED - RLA	REVISED -	STATE OF ILLINOIS DEPARTMENT OF TRANSPORTATION	EXISTING TYPICAL SECTION			F.A.I RTE.	SECTION	COUNTY	TOTAL SHEETS / SHEET NO.
c:\pw_work\pwidot\bucklesjj\d0239130\D570878-sht-typical.dgn		DRAWN - RLA	REVISED -					39	57(2,3,4)PATCHING-1	MCLEAN	16 / 8
	PLOT SCALE = 40.0000 ' / IN.	CHECKED - JMS	REVISED -							CONTRACT NO. 70878	
	PLOT DATE = 10/19/2010	DATE - 9/24-10	REVISED -		SCALE: N/A	SHEET NO. OF SHEETS	STA. N/A TO STA. N/A		ILLINOIS FED. AID PROJECT		