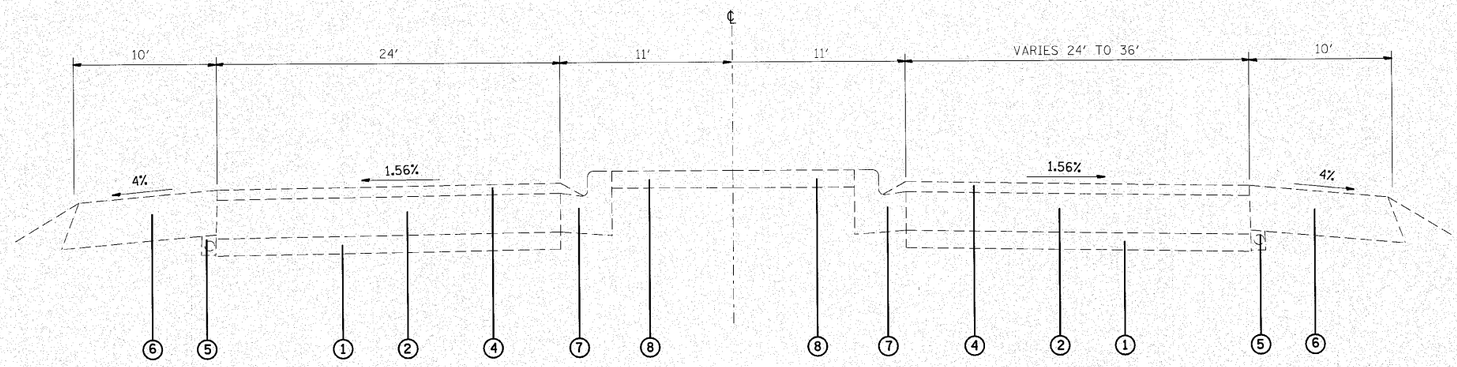

EXISTING TYPICAL SECTION IL 159

STA. 36+25 TO STA. 39+85.27

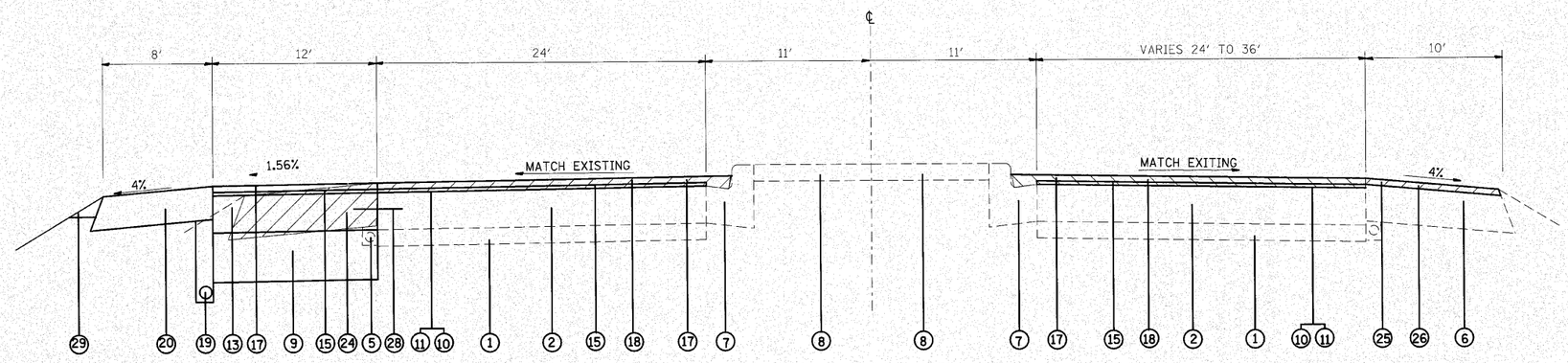

PROPOSED TYPICAL SECTION IL 159

STA. 36+25 TO STA. 39+85.27

LEGEND

1 EXISTING STABILIZED SUB-BASE, 4"
2 EXISTING CONTINUOUS RPCC PAVEMENT, 8"
3 EXISTING PCC PAVEMENT, 10"
4 EXISTING BITUMINOUS OVERLAY, 2 1/2"
5 EXISTING PIPE UNDERDRAIN
6 EXSITING BITUMINOUS SHOULDER, 8"
7 EXISTING CONCRETE CURB AND GUTTER, TYPE B9.24
8 EXISTING CONCRETE MEDIAN
9 PROPOSED AGGREGATE BASE COURSE, TYPE A, 12"
10 PROPOSED BITUMINOUS MATERIAL (PRIME COAT)
11 PROPOSED AGGREGATE (PRIME COAT)
12 PROPOSED HOT-MIX ASPHALT PAVEMENT (FULL DEPTH), 16"
13 PROPOSED PORTLAND CEMENT BASE COURSE, 9 1/2"
14 PROPOSED HOT-MIX ASPHALT BINDER COURSE, IL-19.0, N90, 13 3/4"
15 PROPOSED LEVELING BINDER (MACHINE METHOD), N90, 3/4"
16 PROPOSED LEVELING BINDER (MACHINE METHOD), N90, 1"
17 PROPOSED POLYMERIZED HOT-MIX ASPHALT SURFACE COURSE, MIX E, N90, 1 1/2"
18 PROPOSED HOT-MIX ASPHALT SURFACE REMOVAL, 2"
19 PROPOSED PIPE UNDERDRAIN, 6"
20 PROPOSED HOT-MIX ASPHALT SHOULDER, 8"
21 PROPOSED AGGREGATE SHOULDERS, TYPE A, 6"
22 PROPOSED CONCRETE CURB AND GUTTER, TYPE B9.24
23 PROPOSED CONCRETE MEDIAN SURFACE, 4"
24 PROPOSED BITUMINOUS SHOULDER REMOVAL
25 PROPOSED HOT-MIX ASPHALT SHOULDER REMOVAL, 1 1/2"
26 PROPOSED HOT-MIX ASPHALT SHOULDER, 1 1/2"
27 PROPOSED HOT-MIX ASPHALT SHOULDER, 2 1/2"
28 PROPOSED DOWEL BARS (#6X24" @ 2' CENTERS)
29 PROPOSED AGGREGATE WEDGE SHOULDER, TYPE B

FILE NAME =	USER NAME = burnsideem	DESIGNED -	REVISED -	STATE OF ILLINOIS DEPARTMENT OF TRANSPORTATION	TYPICAL SECTIONS	F.A.I RTE.	SECTION	COUNTY	TOTAL SHEETS	SHEET NO.
c:\pw_work\pwidot\burnsideem\d0166363\d76d59-sht-plan.dgn		DRAWN -	REVISED -			64	82-5K-2	ST CLAIR	162	14
	PLOT SCALE = 50.0000 ' / IN.	CHECKED -	REVISED -					CONTRACT NO. 76D59		
	PLOT DATE = 8/10/2010	DATE -	REVISED -		SCALE: SHEET NO. OF SHEETS STA. TO STA.	FED. ROAD DIST. NO.	ILLINOIS	FED. AID PROJECT		