STATE OF ILLINOIS
DEPARTMENT OF TRANSPORTATION

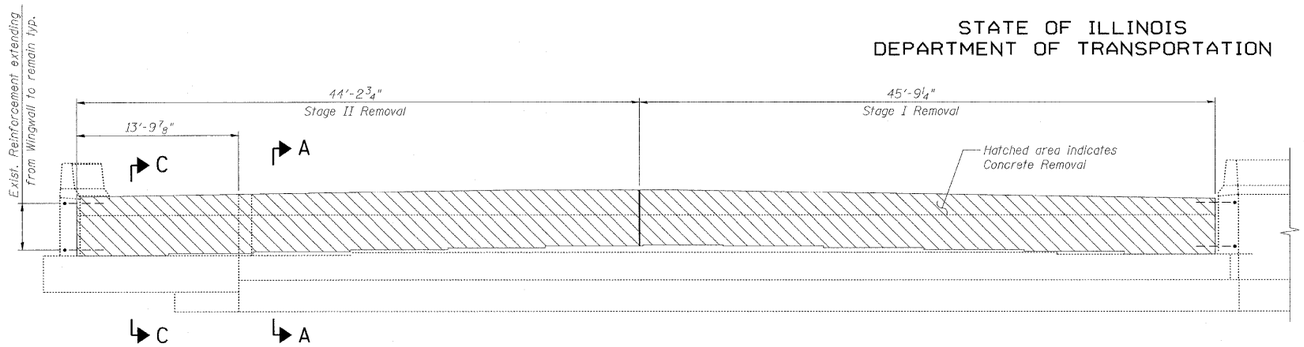

ELEVATION - BACKWALL REMOVAL
(Looking East)

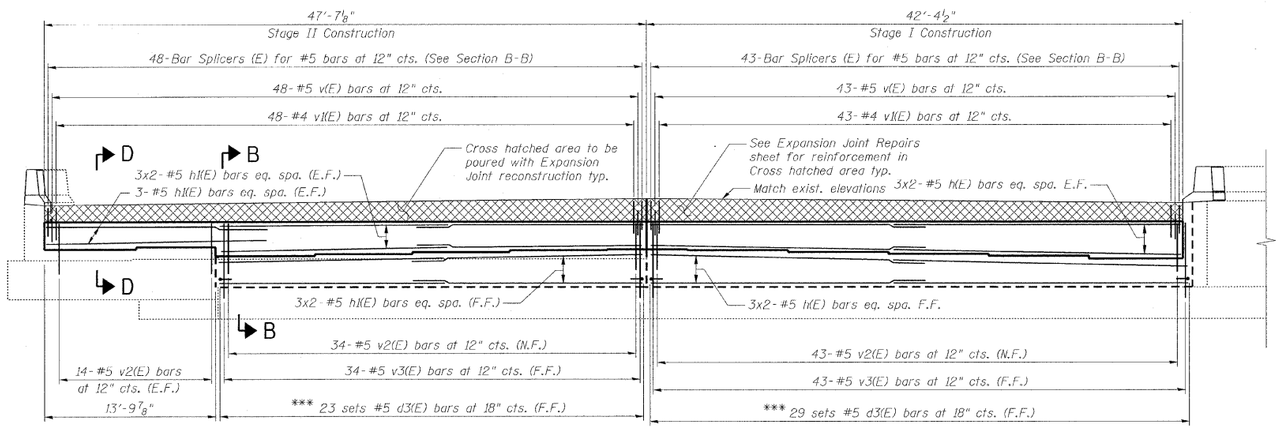

ELEVATION - PROPOSED BACKWALL
(Looking East)

*** Three d3(E) bars per set. See Section B-B for placement.

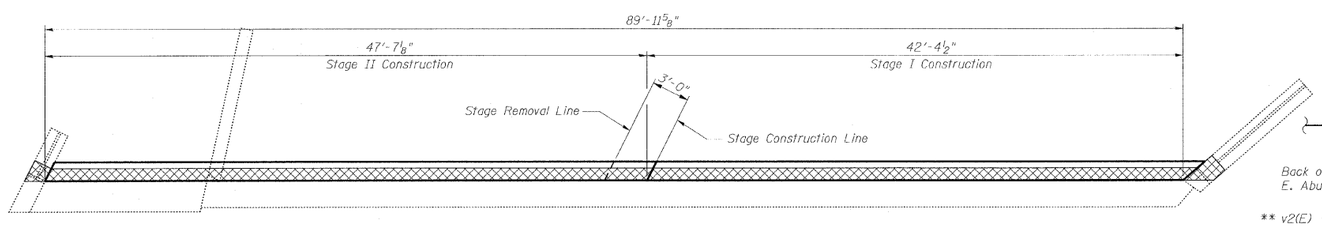

PLAN

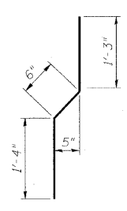

BAR v1(E)

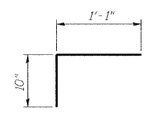

BAR d3(E)

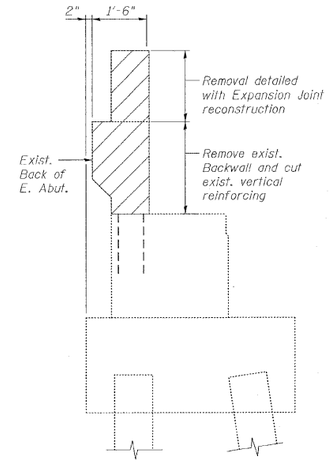

SECTION A-A

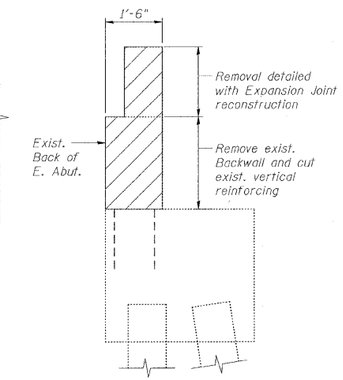

SECTION C-C

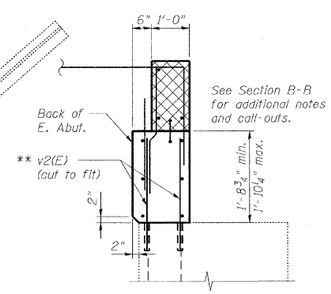

SECTION D-D

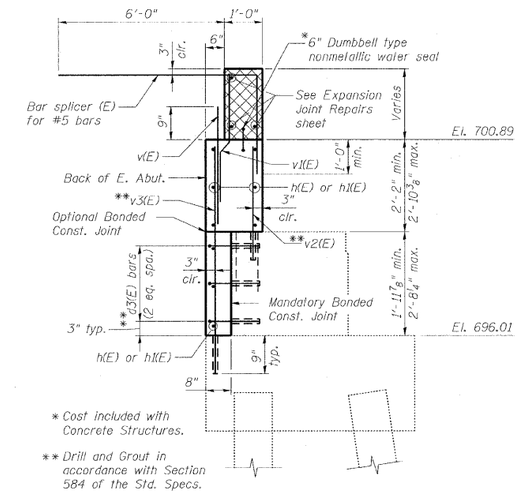

SECTION B-B

BILL OF MATERIAL

BAR	NO.	SIZE	LENGTH	SHAPE
h(E)	18	#5	22'-6"	
h1(E)	24	#5	18'-3"	
v(E)	91	#5	2'-11"	
v1(E)	91	#4	3'-1"	
v2(E)	105	#5	3'-5"	
v3(E)	77	#5	5'-5"	
d3(E)	156	#5	1'-11"	

ITEM	UNIT	TOTAL
Concrete Removal	Cu. Yd.	11.0
Concrete Structures	Cu. Yd.	16.5
Reinforcement Bars, Epoxy Coated	Pound	2,470

Notes:

1. Cross hatched area to be poured with Expansion Joint reconstruction. Quantity of concrete included with Concrete Superstructure.
2. Bars indicated thus 5x2-#5 etc. indicates 5 lines of bars with 2 lengths per line.
3. E.F. denotes Each Face; F.F. denotes Far Face; N.F. denotes Near Face.
4. Existing reinforcement bars extending into the concrete removal area that are designated to remain shall be cleaned, straightened and incorporated into the new construction. Any reinforcement bars that are damaged during concrete removal shall be replaced with an approved bar splicer or anchorage system. Cost included with Concrete Removal.
5. For details of Bar Splicers, see Bar Splicer Assembly Details sheet.
6. Cost of drilling and grouting is included with Reinforcement Bars, Epoxy Coated.
7. Space d3(E) bars to miss v2(E) bars.

EAST ABUTMENT BACKWALL REPAIRS
STRUCTURE NO. 022-0005

DESIGNED -	MFB
CHECKED -	KWS
DRAWN -	RMG
CHECKED -	KWS

benesch
alfred benesch & company
Engineers • Surveyors • Planners
205 North Michigan Avenue, Suite 2400
Chicago, Illinois 60601
312-565-0450 Job No. 10050

SHEET NO. 14	F.A.I. RTE.	SECTION	COUNTY	TOTAL SHEETS	SHEET NO.
25 SHEETS	290	2009-099 BR	COOK/DUPAGE	309	258
			CONTRACT NO. 60I57		
	FED. ROAD DIST. NO.	ILLINOIS	FED. AID PROJECT		

12/01/2009 12:26:19 x:\10000s\10050\engineering_documents_contract_1\sn_022_0006_0005_york_rd\0005-60C51-014-East_Backwall_repair.dgn