EROSION CONTROL LEGEND

- INLET FILTER
- TEMPORARY DITCH CHECK
- PERIMETER EROSION BARRIER
- INLET PROTECTION (UTILIZING TEMP DITCH CHECKS)
- AGGREGATE (EROSION CONTROL) FILTER FABRIC
- TD-P3.1 TEMPORARY DRAINAGE PIPE (REFER TO TEMP. DRAIN. SCHEDULES)
- TEMPORARY EROSION CONTROL SEEDING MULCH, METHOD 2
- TEMPORARY EROSION CONTROL SEEDING TEMPORARY EROSION CONTROL BLANKET
- TEMP BLANKET AND SEEDING INSTALLED IN PREVIOUS STAGE
- EROSION CONTROL DEVICES INSTALLED IN PREVIOUS STAGE
- TEMPORARY CHAIN LINK FENCE WITH SCREENING, 8'
- TD-S3.1 TEMPORARY DRAINAGE STRUCTURE (REFER TO TEMP. DRAIN.SCHEDULES)
- DIRECTION OF TRAFFIC
- RIPRAP (SEE DRAINAGE PLANS FOR DETAILS)
- WORK ZONE
- PAVEMENT CONSTRUCTED IN PREVIOUS STAGE
- TEMPORARY PAVEMENT (PREVIOUSLY CONSTRUCTED)
- TEMPORARY PAVEMENT (ACTIVELY CONSTRUCTING)

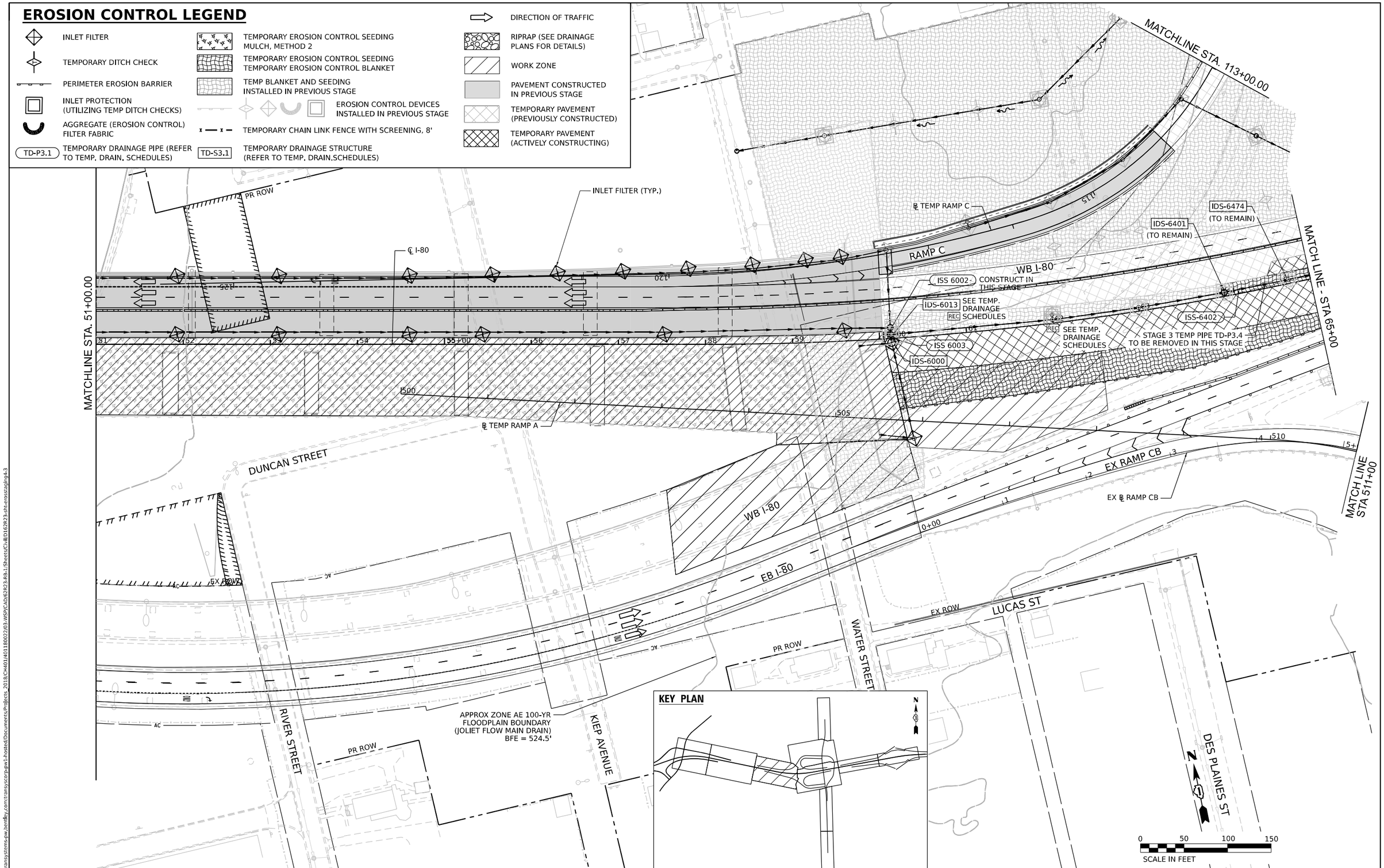

MODEL: Default
FILE NAME: pw://transystems-pw.bentley.com:transyscorp-pw1-hosted/Documents/Projects_2018/CH401/401180022/03-WSP/CAD/62R23-RB-1/Sheets/CivilD162R23-ilt-erosstaging4-3

WSP USA Inc.
30 N. LASALLE STREET
SUITE 4200
CHICAGO, IL 60602
TEL: (312) 782-8150

USER NAME = USGP718052	DESIGNED - DB	REVISED -	
	DRAWN - XL	REVISED -	
PLOT SCALE = 100.000 ' / in.	CHECKED - KS	REVISED -	
PLOT DATE = 11/5/2025	DATE - 11/7/2025	REVISED -	

STATE OF ILLINOIS
DEPARTMENT OF TRANSPORTATION

EROSION CONTROL PLAN
STAGE 4

SCALE: 1" = 50' | SHEET 3 OF 5 SHEETS | STA. | TO STA.

F.A.I. RTE.	SECTION	COUNTY	TOTAL SHEETS	SHEET NO.
80	FAI 80 21 STRUCTURE 2	WILL	1230	301
		CONTRACT NO. 62R23		
		ILLINOIS	FED. AID PROJECT	

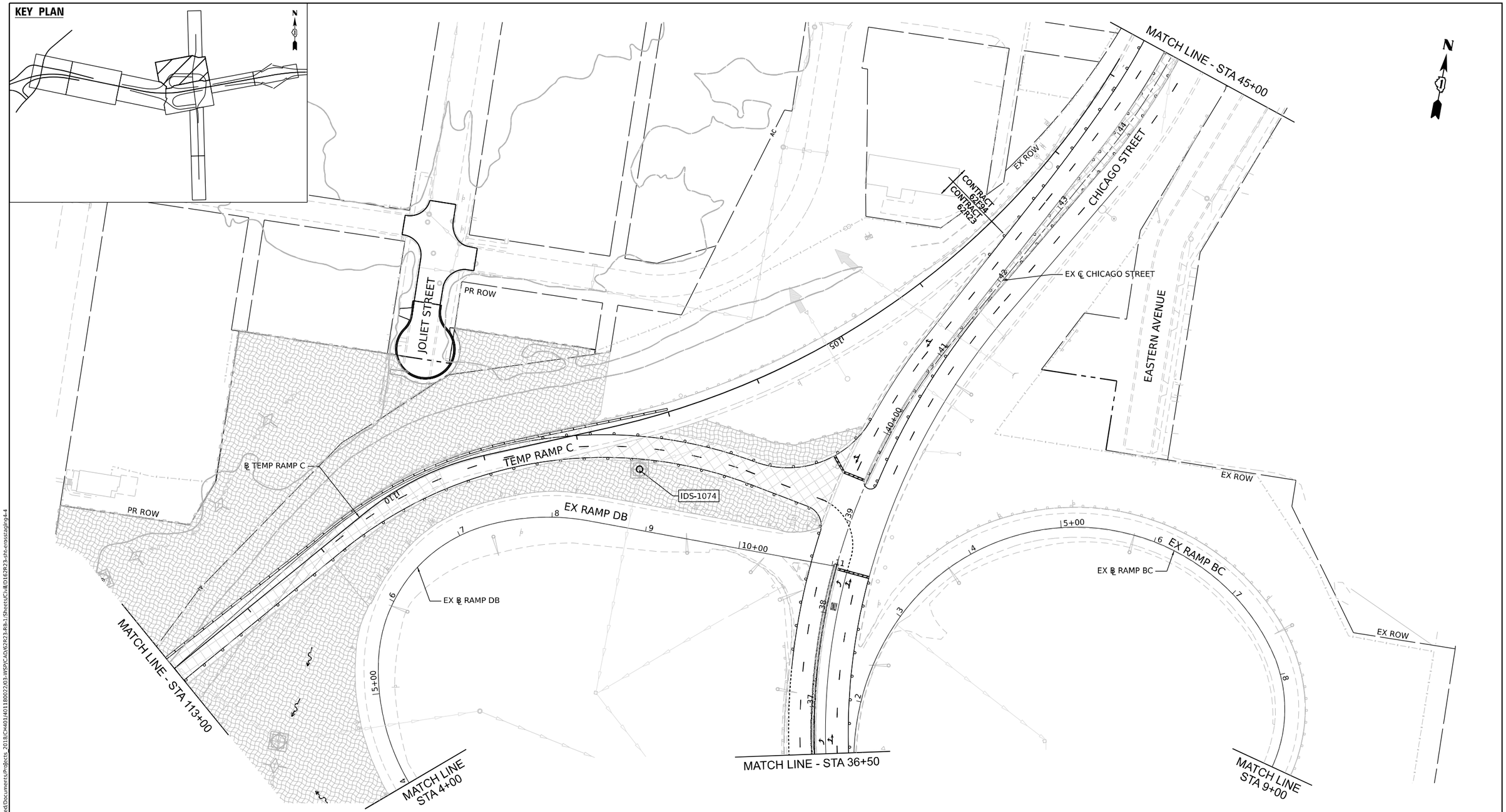

EROSION CONTROL LEGEND

- INLET FILTER
- TEMPORARY DITCH CHECK
- PERIMETER EROSION BARRIER
- TEMPORARY CHAIN LINK FENCE WITH SCREENING, 8'
- INLET PROTECTION (UTILIZING TEMP DITCH CHECKS)
- TD-P3.1 — TEMPORARY DRAINAGE PIPE (REFER TO TEMP. DRAIN. SCHEDULES)
- TD-S3.1 — TEMPORARY DRAINAGE STRUCTURE (REFER TO TEMP. DRAIN.SCHEDULES)
- AGGREGATE (EROSION CONTROL) FILTER FABRIC
- EROSION CONTROL DEVICES INSTALLED IN PREVIOUS STAGE
- WORK ZONE
- PAVEMENT CONSTRUCTED IN PREVIOUS STAGE
- TEMPORARY PAVEMENT (PREVIOUSLY CONSTRUCTED)
- TEMPORARY PAVEMENT (ACTIVELY CONSTRUCTING)
- TEMPORARY EROSION CONTROL SEEDING MULCH, METHOD 2
- TEMPORARY EROSION CONTROL SEEDING TEMPORARY EROSION CONTROL BLANKET
- RIPRAP (SEE DRAINAGE PLANS FOR DETAILS)
- TEMP BLANKET AND SEEDING INSTALLED IN PREVIOUS STAGE
- DIRECTION OF TRAFFIC

WSP USA Inc.
30 N. LASALLE STREET
SUITE 4200
CHICAGO, IL 60602
TEL: (312) 782-8150

USER NAME = USGP718052	DESIGNED - DB	REVISED -
	DRAWN - XL	REVISED -
PLOT SCALE = 100.000 ' / in.	CHECKED - KS	REVISED -
PLOT DATE = 11/5/2025	DATE - 11/7/2025	REVISED -

STATE OF ILLINOIS
DEPARTMENT OF TRANSPORTATION

EROSION CONTROL PLAN
STAGE 4

SCALE: | SHEET 4 OF 5 SHEETS | STA. | TO STA.

F.A.I. RTE.	SECTION	COUNTY	TOTAL SHEETS	SHEET NO.
80	FAI 80 21 STRUCTURE 2	WILL	1230	302
		CONTRACT NO. 62R23		
	ILLINOIS	FED. AID PROJECT		

MODEL: Default
FILE NAME: pw://transystems-pw.bentley.com:transyscorp-pw1-hosted/Documents/Projects_2018/CH401/401180022/03-WSP/CAD/62R23-RB-1/Sheets/Civil/D162R23-sht-erosstaging4-4

MATCH LINE - STA 4+00

MATCH LINE - STA 36+50

MATCH LINE STA 9+00

MATCH LINE - STA 65+00

MATCH LINE - STA 712+00

MATCH LINE STA 511+00

MATCH LINE - STA 28+50

EX ℄ RAMP DB

EX RAMP DB

EX ℄ RAMP BC

EX RAMP BC

WB I-80

℄ I-80

EB I-80

REMOVE EX STRUCTS. THIS STAGE

ISS-6577

TD-P4.4

TD-S4.4

TD-S4.5 PROPOSED CATCH BASIN CONNECTION OVER EXISTING (24" RCP) STORM SEWER

STORM SEWER TO BE CLEANED

DRAINAGE STRUCTURE TO BE CLEANED

STORM SEWER TO BE CLEANED

DRAINAGE STRUCTURE TO BE CLEANED

STORM SEWER TO BE CLEANED

℄ TEMP RAMP A

EX RAMP AD

EX RAMP CA

EX RAMP CB

CONTRACT 62R23

CONTRACT 62F94

EX CHICAGO STREET

DRAINAGE STRUCTURE TO BE CLEANED

EX ℄ RAMP AD

EX ℄ RAMP CA

BNSF RAILROAD

UP RAILROAD

PR ROW

EX ROW

JOLIET ST

EX EASEMENT

0 50 100 150

SCALE IN FEET

EROSION CONTROL LEGEND

- INLET FILTER
- TEMPORARY DITCH CHECK
- PERIMETER EROSION BARRIER
- INLET PROTECTION (UTILIZING TEMP DITCH CHECKS)
- AGGREGATE (EROSION CONTROL) FILTER FABRIC
- TD-P3.1 TEMPORARY DRAINAGE PIPE (REFER TO TEMP. DRAIN. SCHEDULES)
- TEMPORARY EROSION CONTROL SEEDING MULCH, METHOD 2
- TEMPORARY EROSION CONTROL SEEDING TEMPORARY EROSION CONTROL BLANKET
- TEMP BLANKET AND SEEDING INSTALLED IN PREVIOUS STAGE
- EROSION CONTROL DEVICES INSTALLED IN PREVIOUS STAGE
- TEMPORARY CHAIN LINK FENCE WITH SCREENING, 8'
- TD-S3.1 TEMPORARY DRAINAGE STRUCTURE (REFER TO TEMP. DRAIN.SCHEDULES)
- DIRECTION OF TRAFFIC
- RIPRAP (SEE DRAINAGE PLANS FOR DETAILS)
- WORK ZONE
- PAVEMENT CONSTRUCTED IN PREVIOUS STAGE
- TEMPORARY PAVEMENT (PREVIOUSLY CONSTRUCTED)
- TEMPORARY PAVEMENT (ACTIVELY CONSTRUCTING)

KEY PLAN

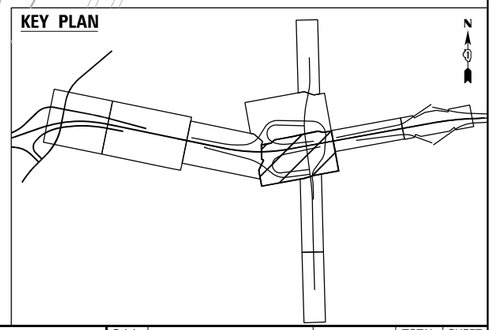

MODEL: Default
FILE NAME: pw://transystems-pw.bentley.com:transyscorp-pw1-hosted/Documents/Projects_2018/CH401/401180022/03-WSP/CAD/62R23-RB-1/Sheets/CivIll/D162R23-sht-erosstagelig-4-5

WSP USA Inc.
30 N. LASALLE STREET
SUITE 4200
CHICAGO, IL 60602
TEL: (312) 782-8150

USER NAME = USGP718052	DESIGNED - DB	REVISED -
	DRAWN - XL	REVISED -
PLOT SCALE = 100.000 ' / in.	CHECKED - KS	REVISED -
PLOT DATE = 11/5/2025	DATE - 11/7/2025	REVISED -

STATE OF ILLINOIS
DEPARTMENT OF TRANSPORTATION

EROSION CONTROL PLAN
STAGE 4

SCALE: 1" = 50' | SHEET 5 OF 5 SHEETS | STA. | TO STA.

F.A.I. RTE.	SECTION	COUNTY	TOTAL SHEETS	SHEET NO.
80	FAI 80 21 STRUCTURE 2	WILL	1230	303
		CONTRACT NO. 62R23		
	ILLINOIS	FED. AID PROJECT		

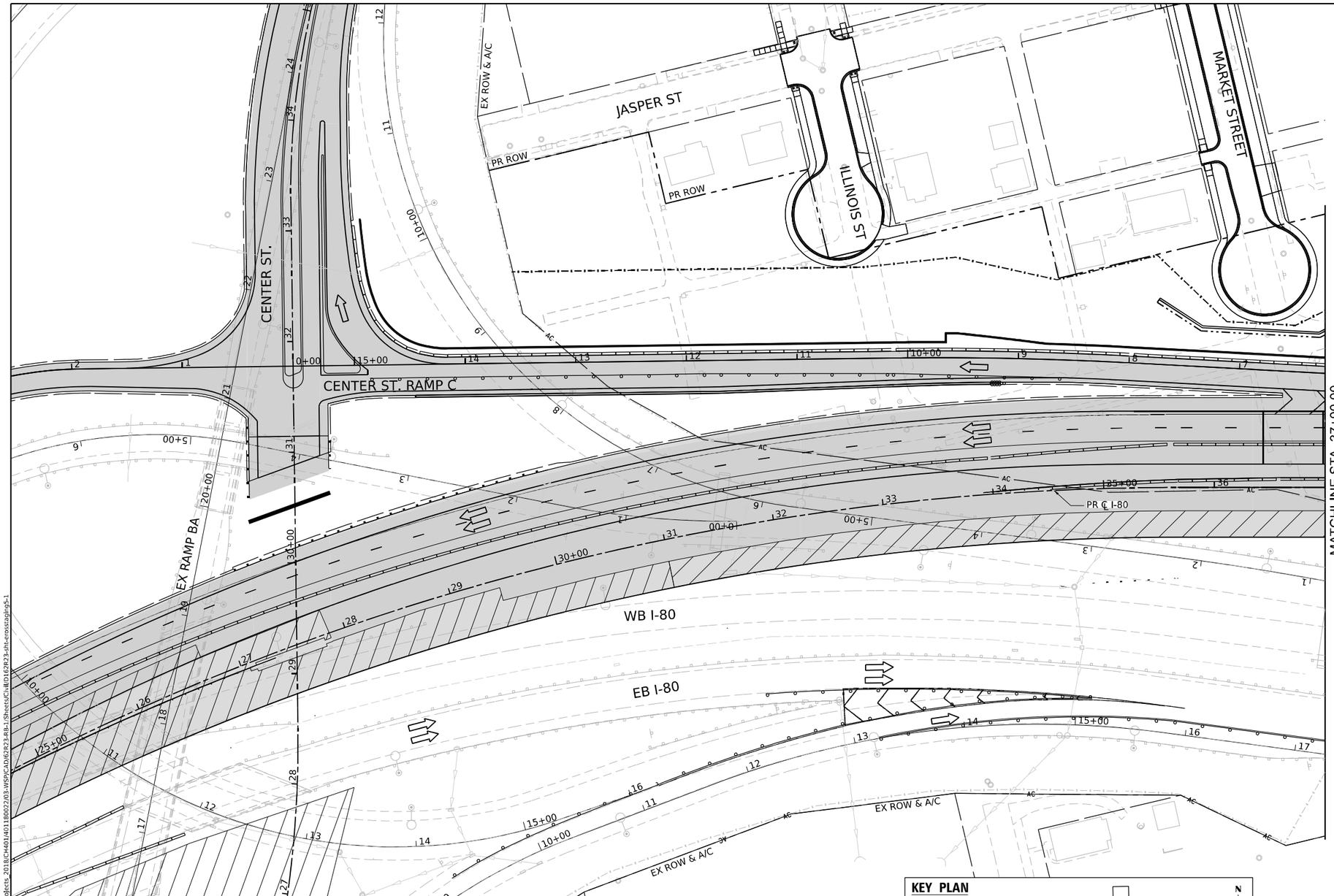

EROSION CONTROL LEGEND

- INLET FILTER
- TEMPORARY DITCH CHECK
- PERIMETER EROSION BARRIER
- INLET PROTECTION (UTILIZING TEMP DITCH CHECKS)
- AGGREGATE (EROSION CONTROL) FILTER FABRIC
- TD-P3.1 — TEMPORARY DRAINAGE PIPE (REFER TO TEMP. DRAIN. SCHEDULES)
- TEMPORARY EROSION CONTROL SEEDING MULCH, METHOD 2
- TEMPORARY EROSION CONTROL SEEDING TEMPORARY EROSION CONTROL BLANKET
- TEMP BLANKET AND SEEDING INSTALLED IN PREVIOUS STAGE
- EROSION CONTROL DEVICES INSTALLED IN PREVIOUS STAGE
- TEMPORARY CHAIN LINK FENCE WITH SCREENING, 8'
- TD-S3.1 — TEMPORARY DRAINAGE STRUCTURE (REFER TO TEMP. DRAIN.SCHEDULES)
- DIRECTION OF TRAFFIC
- RIPRAP (SEE DRAINAGE PLANS FOR DETAILS)
- WORK ZONE
- PAVEMENT CONSTRUCTED IN PREVIOUS STAGE
- TEMPORARY PAVEMENT (PREVIOUSLY CONSTRUCTED)
- TEMPORARY PAVEMENT (ACTIVELY CONSTRUCTING)

KEY PLAN

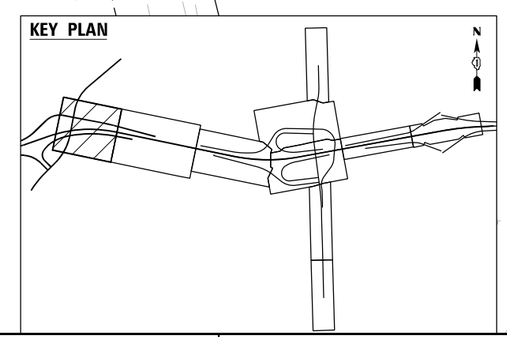

N

0 50 100 150
SCALE IN FEET

MODEL: Default
FILE NAME: pw://transystems-pw.bentley.com:transyscorp-pw1-hosted/Documents/Projects_2018/CH401/401180022/03-WSP/CAD/62R23-Rb-1/Sheets/CivilD162R23-rh-erosstaging5-1

WSP USA Inc.
30 N. LASALLE STREET
SUITE 4200
CHICAGO, IL 60602
TEL: (312) 782-8150

USER NAME = USGP718052	DESIGNED - DB	REVISED -	
	DRAWN - XL	REVISED -	
PLOT SCALE = 100.000 ' / in.	CHECKED - KS	REVISED -	
PLOT DATE = 11/5/2025	DATE - 11/7/2025	REVISED -	

STATE OF ILLINOIS
DEPARTMENT OF TRANSPORTATION

EROSION CONTROL PLAN
STAGE 5

SCALE: 1" = 50' | SHEET 1 OF 5 SHEETS | STA. | TO STA.

F.A.I. RTE.	SECTION	COUNTY	TOTAL SHEETS	SHEET NO.
80	FAI 80 21 STRUCTURE 2	WILL	1230	304
		CONTRACT NO. 62R23		
	ILLINOIS	FED. AID PROJECT		

EROSION CONTROL LEGEND

- INLET FILTER
- TEMPORARY DITCH CHECK
- PERIMETER EROSION BARRIER
- TEMPORARY CHAIN LINK FENCE WITH SCREENING, 8'
- INLET PROTECTION (UTILIZING TEMP DITCH CHECKS)
- TD-P3.1 — TEMPORARY DRAINAGE PIPE (REFER TO TEMP. DRAIN. SCHEDULES)
- TD-S3.1 — TEMPORARY DRAINAGE STRUCTURE (REFER TO TEMP. DRAIN.SCHEDULES)
- AGGREGATE (EROSION CONTROL) FILTER FABRIC
- EROSION CONTROL DEVICES INSTALLED IN PREVIOUS STAGE
- WORK ZONE
- PAVEMENT CONSTRUCTED IN PREVIOUS STAGE
- TEMPORARY PAVEMENT (PREVIOUSLY CONSTRUCTED)
- TEMPORARY PAVEMENT (ACTIVELY CONSTRUCTING)
- TEMPORARY EROSION CONTROL SEEDING MULCH, METHOD 2
- TEMPORARY EROSION CONTROL SEEDING TEMPORARY EROSION CONTROL BLANKET
- RIPRAP (SEE DRAINAGE PLANS FOR DETAILS)
- TEMP BLANKET AND SEEDING INSTALLED IN PREVIOUS STAGE
- DIRECTION OF TRAFFIC

CHERRY STREET
CSX RAILROAD
US 6/ RAILROAD ST.
PR ROW
END CONTRACT 62R22
BEGIN CONTRACT 62R23
EXISTING FLOODWALL
DES PLAINES RIVER
PR ℄ I-80
MATCHLINE STA. 37+00.00
MATCHLINE STA. 51+00.00
WB I-80
EB I-80
BEGIN PROJECT STA. 37+89.00
EX ROW & A/C
PR PERM EASEMENT
INLET FILTER (TYP.)
EXIST WB I-80
EXIST EB I-80
EX DOLPHIN (TYP.)
EX BRIDGE
APPROX ZONE AE 100-YR FLOODPLAIN BOUNDARY (JOLIET FLOW MAIN DRAIN) BFE = 524.5'
0 50 100 150
SCALE IN FEET

KEY PLAN

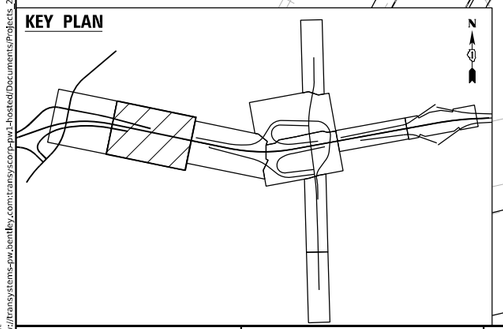

MODEL: Default
FILE NAME: pw://transystems-pw.bentley.com:transyscorp-pw1-hosted/Documents/Projects_2018/CH401/401180022/03-WSP/CAD/62R23-RB-1/Sheets/CivilD162R23-sht-erosstaging5-2

WSP USA Inc.
30 N. LASALLE STREET
SUITE 4200
CHICAGO, IL 60602
TEL: (312) 782-8150

USER NAME = USGP718052	DESIGNED - DB	REVISED -
	DRAWN - XL	REVISED -
PLOT SCALE = 100.000 ' / in.	CHECKED - KS	REVISED -
PLOT DATE = 11/5/2025	DATE - 11/7/2025	REVISED -

STATE OF ILLINOIS
DEPARTMENT OF TRANSPORTATION

EROSION CONTROL PLAN
STAGE 5

SCALE: 1" = 50' | SHEET 2 OF 5 SHEETS | STA. TO STA.

F.A.I. RTE.	SECTION	COUNTY	TOTAL SHEETS	SHEET NO.
80	FAI 80 21 STRUCTURE 2	WILL	1230	305
		CONTRACT NO. 62R23		
	ILLINOIS	FED. AID PROJECT		

EROSION CONTROL LEGEND

- INLET FILTER
- TEMPORARY DITCH CHECK
- PERIMETER EROSION BARRIER
- INLET PROTECTION (UTILIZING TEMP DITCH CHECKS)
- AGGREGATE (EROSION CONTROL) FILTER FABRIC
- TD-P3.1 TEMPORARY DRAINAGE PIPE (REFER TO TEMP. DRAIN. SCHEDULES)
- TEMPORARY EROSION CONTROL SEEDING MULCH, METHOD 2
- TEMPORARY EROSION CONTROL SEEDING TEMPORARY EROSION CONTROL BLANKET
- TEMP BLANKET AND SEEDING INSTALLED IN PREVIOUS STAGE
- EROSION CONTROL DEVICES INSTALLED IN PREVIOUS STAGE
- TEMPORARY CHAIN LINK FENCE WITH SCREENING, 8'
- TD-S3.1 TEMPORARY DRAINAGE STRUCTURE (REFER TO TEMP. DRAIN.SCHEDULES)
- DIRECTION OF TRAFFIC
- RIPRAP (SEE DRAINAGE PLANS FOR DETAILS)
- WORK ZONE
- PAVEMENT CONSTRUCTED IN PREVIOUS STAGE
- TEMPORARY PAVEMENT (PREVIOUSLY CONSTRUCTED)
- TEMPORARY PAVEMENT (ACTIVELY CONSTRUCTING)

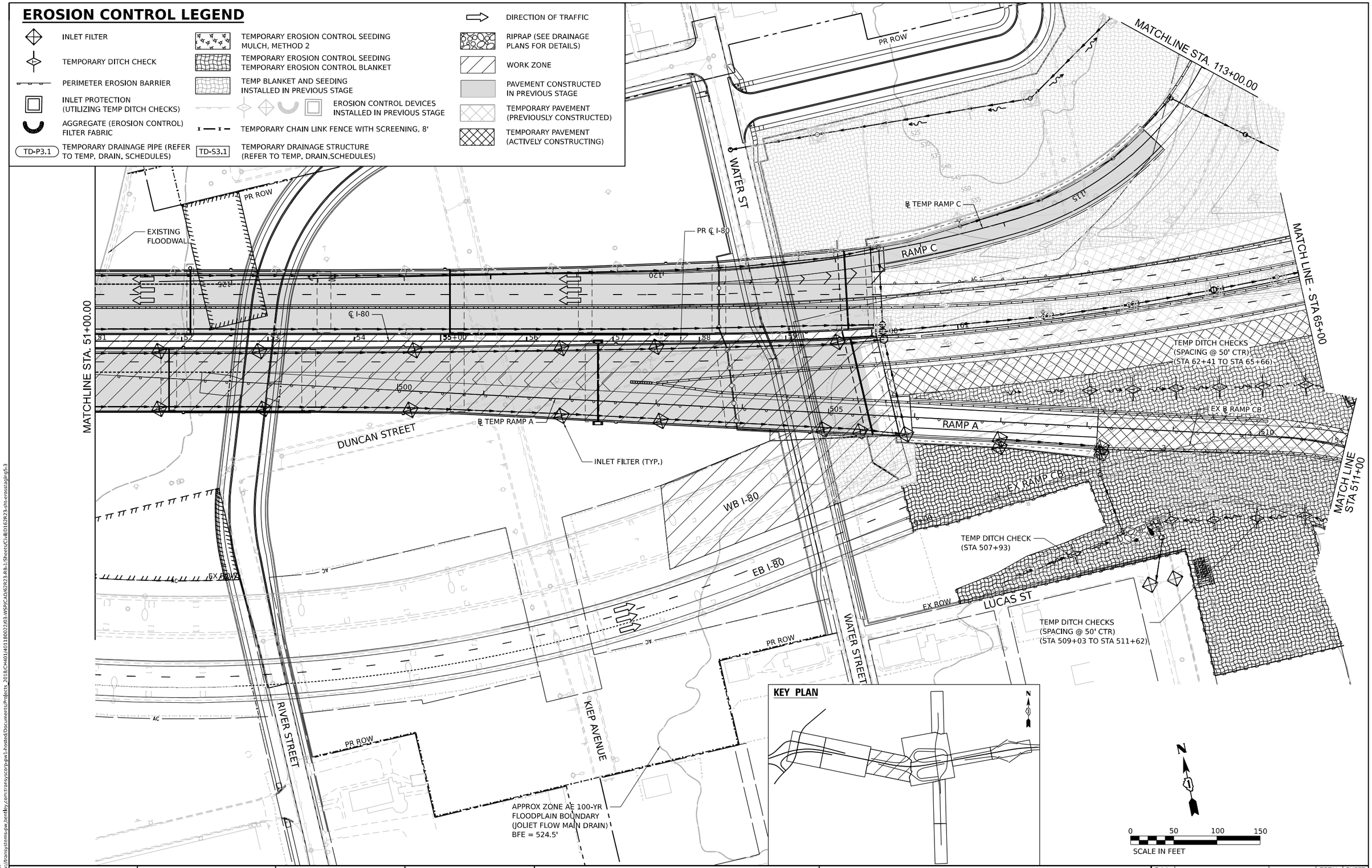

MODEL: Default
FILE NAME: pw://transystems-pw.bentley.com:transyscorp-pw1-hosted/Documents/Projects_2018/CH401/401180022/03-WSP/CAD/62R23-RB-1/Sheets/CivilD162R23-ifht-erosstagings-3

WSP USA Inc.
30 N. LASALLE STREET
SUITE 4200
CHICAGO, IL 60602
TEL: (312) 782-8150

USER NAME = USGP718052	DESIGNED - DB	REVISED -	
	DRAWN - XL	REVISED -	
PLOT SCALE = 100.000 ' / in.	CHECKED - KS	REVISED -	
PLOT DATE = 11/5/2025	DATE - 11/7/2025	REVISED -	

STATE OF ILLINOIS
DEPARTMENT OF TRANSPORTATION

EROSION CONTROL PLAN
STAGE 5

SCALE: 1" = 50' | SHEET 3 OF 5 SHEETS | STA. TO STA.

F.A.I. RTE.	SECTION	COUNTY	TOTAL SHEETS	SHEET NO.
80	FAI 80 21 STRUCTURE 2	WILL	1230	306
		CONTRACT NO. 62R23		
		ILLINOIS	FED. AID PROJECT	

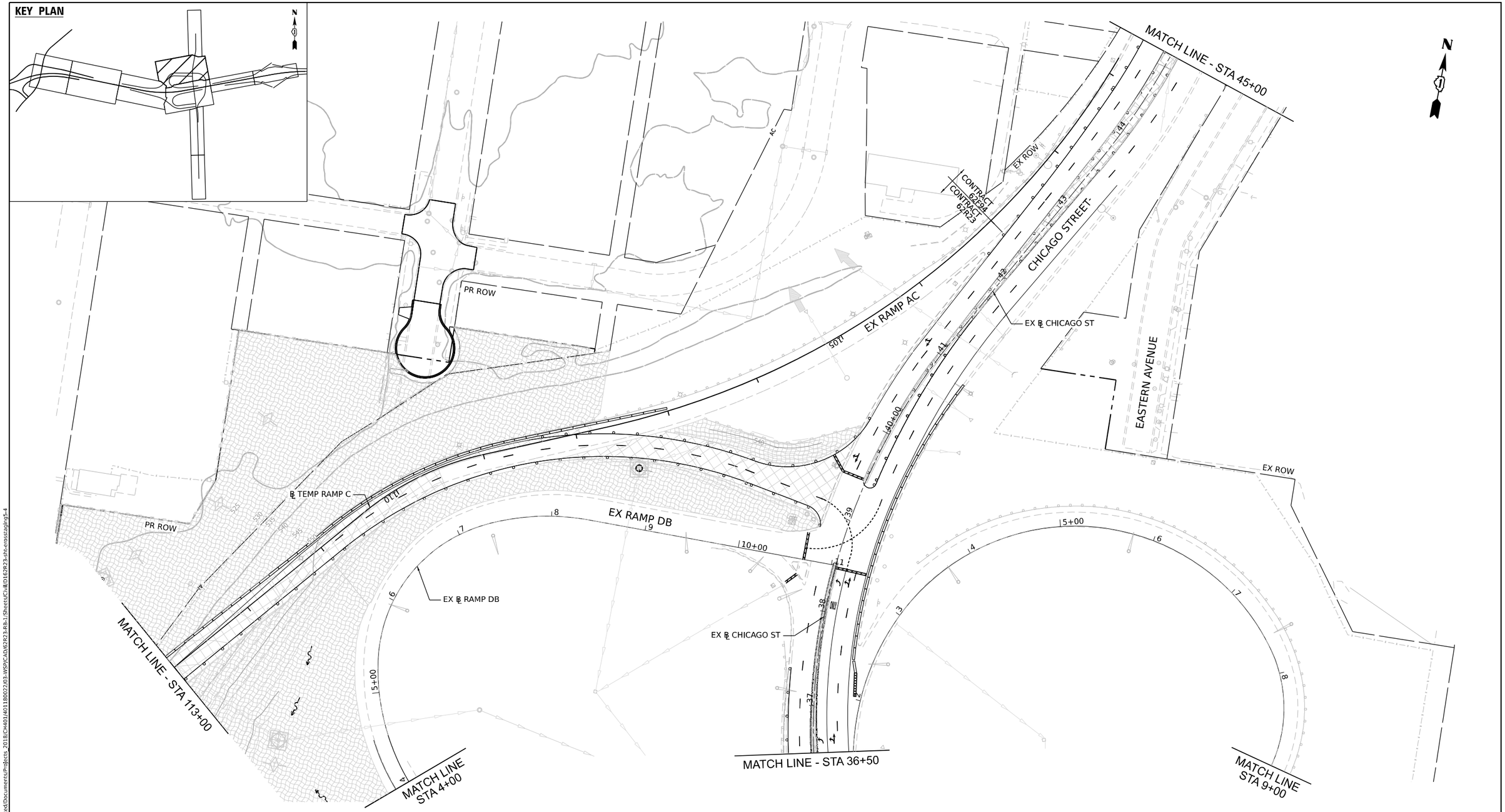

EROSION CONTROL LEGEND

- INLET FILTER
- TEMPORARY DITCH CHECK
- PERIMETER EROSION BARRIER
- TEMPORARY CHAIN LINK FENCE WITH SCREENING, 8'
- INLET PROTECTION (UTILIZING TEMP DITCH CHECKS)
- TD-P3.1 — TEMPORARY DRAINAGE PIPE (REFER TO TEMP. DRAIN. SCHEDULES)
- TD-S3.1 — TEMPORARY DRAINAGE STRUCTURE (REFER TO TEMP. DRAIN.SCHEDULES)
- AGGREGATE (EROSION CONTROL) FILTER FABRIC
- EROSION CONTROL DEVICES INSTALLED IN PREVIOUS STAGE
- WORK ZONE
- PAVEMENT CONSTRUCTED IN PREVIOUS STAGE
- TEMPORARY PAVEMENT (PREVIOUSLY CONSTRUCTED)
- TEMPORARY PAVEMENT (ACTIVELY CONSTRUCTING)
- TEMPORARY EROSION CONTROL SEEDING MULCH, METHOD 2
- TEMPORARY EROSION CONTROL SEEDING TEMPORARY EROSION CONTROL BLANKET
- RIPRAP (SEE DRAINAGE PLANS FOR DETAILS)
- TEMP BLANKET AND SEEDING INSTALLED IN PREVIOUS STAGE
- DIRECTION OF TRAFFIC

MODEL: Default
FILE NAME: pw://transystems-pw.bentley.com:transyscorp-pw1-hosted/Documents/Projects_2018/CH401401180022/03-WSP/CAD/62R23-RB-1/Sheets/CivilD162R23-site-erosstaging5-4

WSP USA Inc.
30 N. LASALLE STREET
SUITE 4200
CHICAGO, IL 60602
TEL: (312) 782-8130

USER NAME = USGP718052	DESIGNED - DB	REVISED -	
	DRAWN - XL	REVISED -	
PLOT SCALE = 100.000 ' / in.	CHECKED - KS	REVISED -	
PLOT DATE = 11/5/2025	DATE - 11/7/2025	REVISED -	

STATE OF ILLINOIS
DEPARTMENT OF TRANSPORTATION

EROSION CONTROL PLAN
STAGE 5

SCALE: | SHEET 4 OF 5 SHEETS | STA. | TO STA.

F.A.I. RTE.	SECTION	COUNTY	TOTAL SHEETS	SHEET NO.
80	FAI 80 21 STRUCTURE 2	WILL	1230	307
		CONTRACT NO. 62R23		
	ILLINOIS	FED. AID PROJECT		

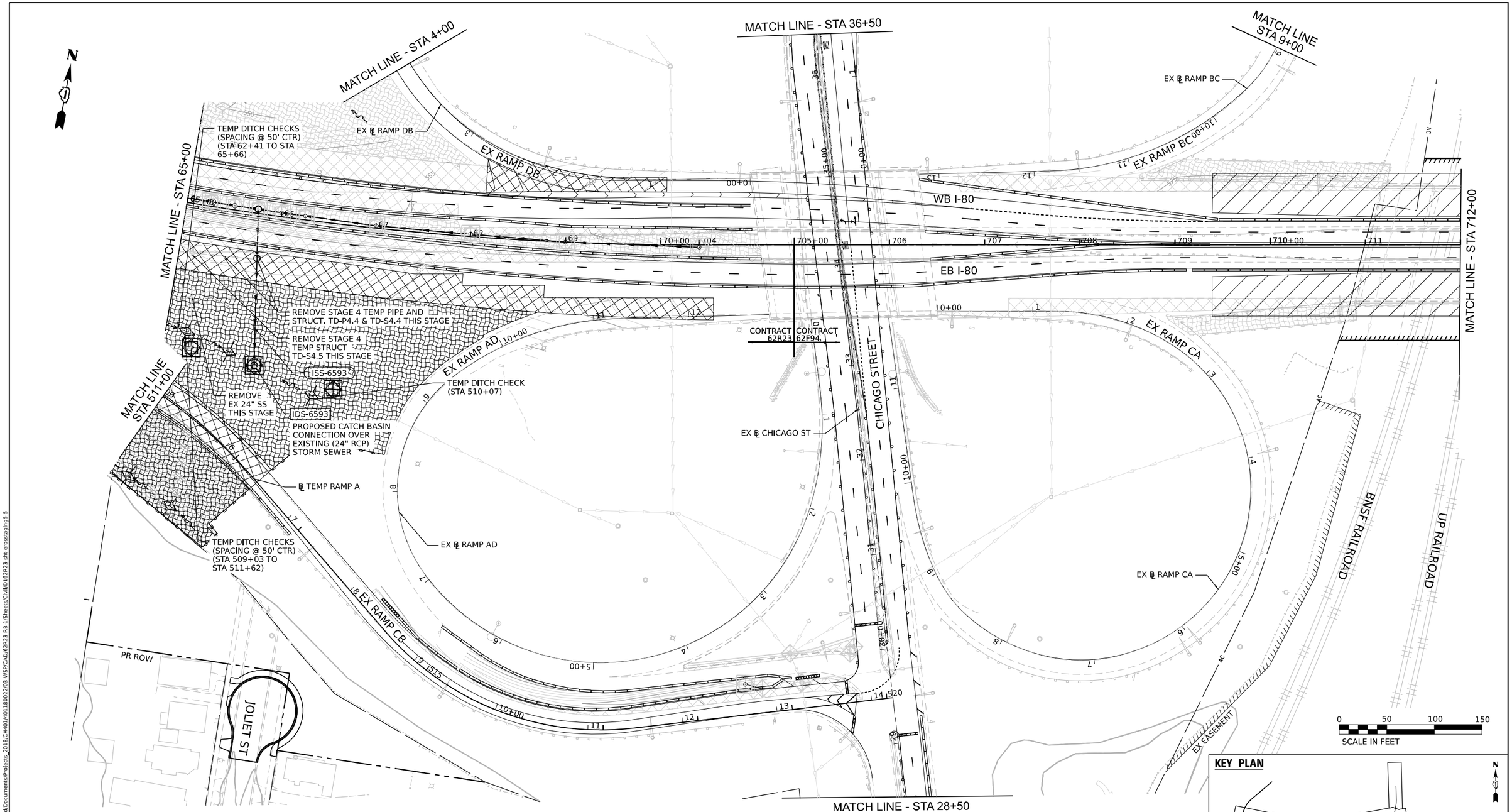

EROSION CONTROL LEGEND

- INLET FILTER
- TEMPORARY DITCH CHECK
- PERIMETER EROSION BARRIER
- TEMPORARY CHAIN LINK FENCE WITH SCREENING, 8'
- INLET PROTECTION (UTILIZING TEMP DITCH CHECKS)
- TD-P3.1 — TEMPORARY DRAINAGE PIPE (REFER TO TEMP. DRAIN. SCHEDULES)
- TD-S3.1 — TEMPORARY DRAINAGE STRUCTURE (REFER TO TEMP. DRAIN.SCHEDULES)
- AGGREGATE (EROSION CONTROL) FILTER FABRIC
- EROSION CONTROL DEVICES INSTALLED IN PREVIOUS STAGE
- WORK ZONE
- PAVEMENT CONSTRUCTED IN PREVIOUS STAGE
- TEMPORARY PAVEMENT (PREVIOUSLY CONSTRUCTED)
- TEMPORARY PAVEMENT (ACTIVELY CONSTRUCTING)
- TEMPORARY EROSION CONTROL SEEDING MULCH, METHOD 2
- TEMPORARY EROSION CONTROL SEEDING TEMPORARY EROSION CONTROL BLANKET
- RIPRAP (SEE DRAINAGE PLANS FOR DETAILS)
- TEMP BLANKET AND SEEDING INSTALLED IN PREVIOUS STAGE
- DIRECTION OF TRAFFIC

KEY PLAN

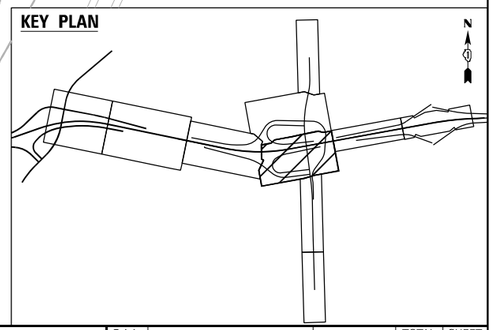

MODEL: Default
FILE NAME: pw://transystems-pw.bentley.com:transyscorp-pw1-hosted/Documents/Projects_2018/CH401/401180022/03-WSP/CAD/62R23-RB-1/Sheets/CivilD162R23-ith-erosstaging5-5

WSP USA Inc.
30 N. LASALLE STREET
SUITE 4200
CHICAGO, IL 60602
TEL: (312) 782-8150

USER NAME = USGP718052	DESIGNED - DB	REVISED -	
	DRAWN - XL	REVISED -	
PLOT SCALE = 100.000 ' / in.	CHECKED - KS	REVISED -	
PLOT DATE = 11/5/2025	DATE - 11/7/2025	REVISED -	

STATE OF ILLINOIS
DEPARTMENT OF TRANSPORTATION

EROSION CONTROL PLAN
STAGE 5

SCALE: 1" = 50' | SHEET 5 OF 5 SHEETS | STA. | TO STA.

F.A.I. RTE.	SECTION	COUNTY	TOTAL SHEETS	SHEET NO.
80	FAI 80 21 STRUCTURE 2	WILL	1230	308
		CONTRACT NO. 62R23		
	ILLINOIS	FED. AID PROJECT		

EROSION CONTROL LEGEND

- INLET FILTER
- TEMPORARY DITCH CHECK
- PERIMETER EROSION BARRIER
- RIPRAP (SEE DRAINAGE PLANS FOR DETAILS)
- TEMPORARY EROSION CONTROL SEEDING MULCH, METHOD 2
- TEMPORARY EROSION CONTROL SEEDING EROSION CONTROL BLANKET
- TEMPORARY EROSION CONTROL SEEDING HEAVY DUTY EROSION CONTROL BLANKET
- TEMPORARY SEDIMENT BASIN
- INLET PROTECTION (UTILIZING TEMP DITCH CHECKS)
- AGGREGATE (EROSION CONTROL) FILTER FABRIC
- PAVEMENT CONSTRUCTED IN CURRENT STAGE OR PREVIOUS STAGE
- TEMPORARY PAVEMENT

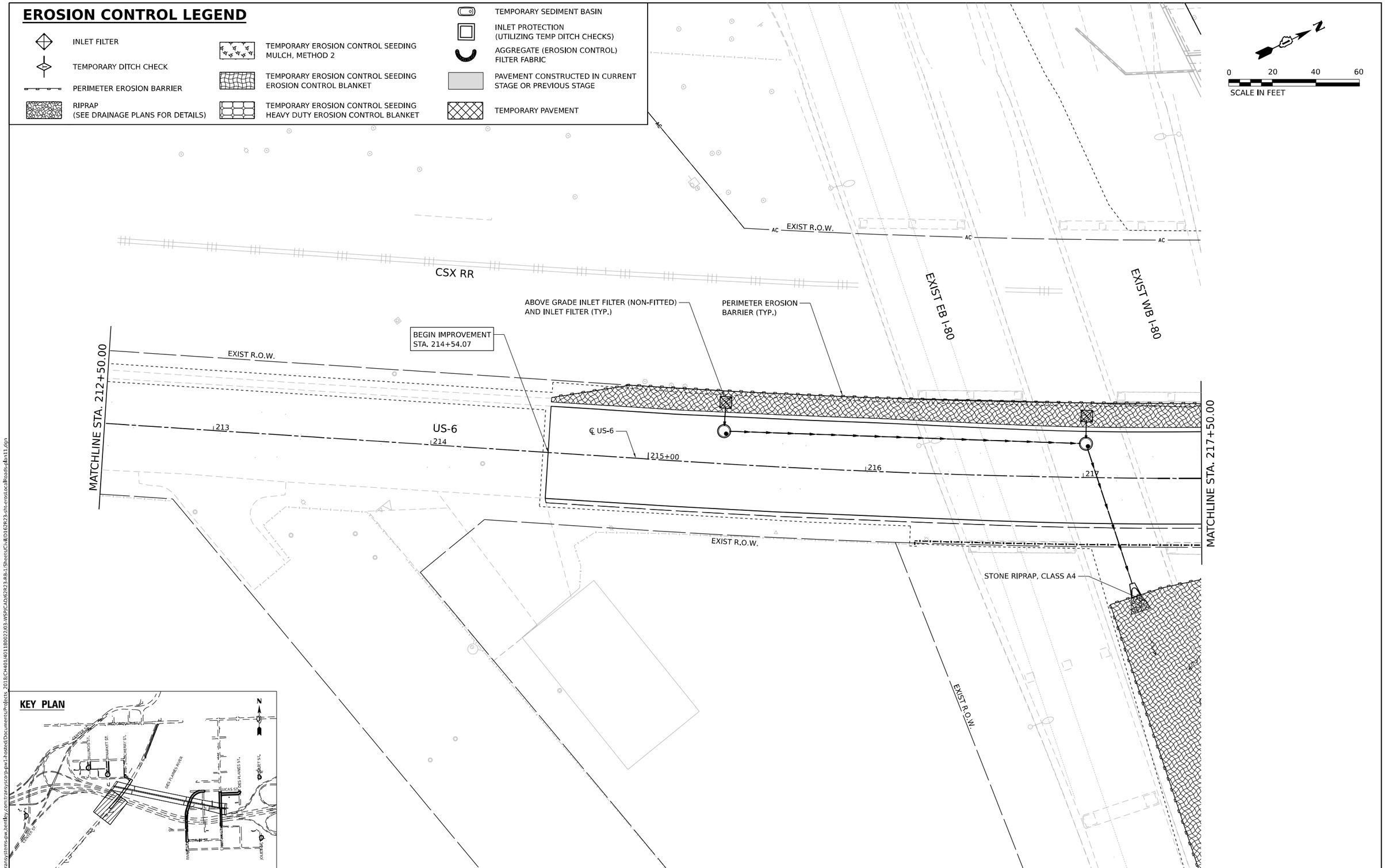

KEY PLAN

WSP USA Inc.
30 N. LASALLE STREET
SUITE 4200
CHICAGO, IL 60602
TEL: (312) 782-8150

USER NAME = USHC706648	DESIGNED - CC	REVISED -	
	DRAWN - XL	REVISED -	
PLOT SCALE = 40.000 ' / in.	CHECKED - DB	REVISED -	
PLOT DATE = 11/6/2025	DATE - 11/7/2025	REVISED -	

STATE OF ILLINOIS
DEPARTMENT OF TRANSPORTATION

EROSION CONTROL PLAN
US–6

SCALE: 1"=20' | SHEET 1 OF 12 SHEETS | STA. | TO STA.

F.A.I. RTE.	SECTION	COUNTY	TOTAL SHEETS	SHEET NO.
80	FAI 80 21 STRUCTURE 2	WILL	1230	309
		CONTRACT NO. 62R23		
		ILLINOIS	FED. AID PROJECT	

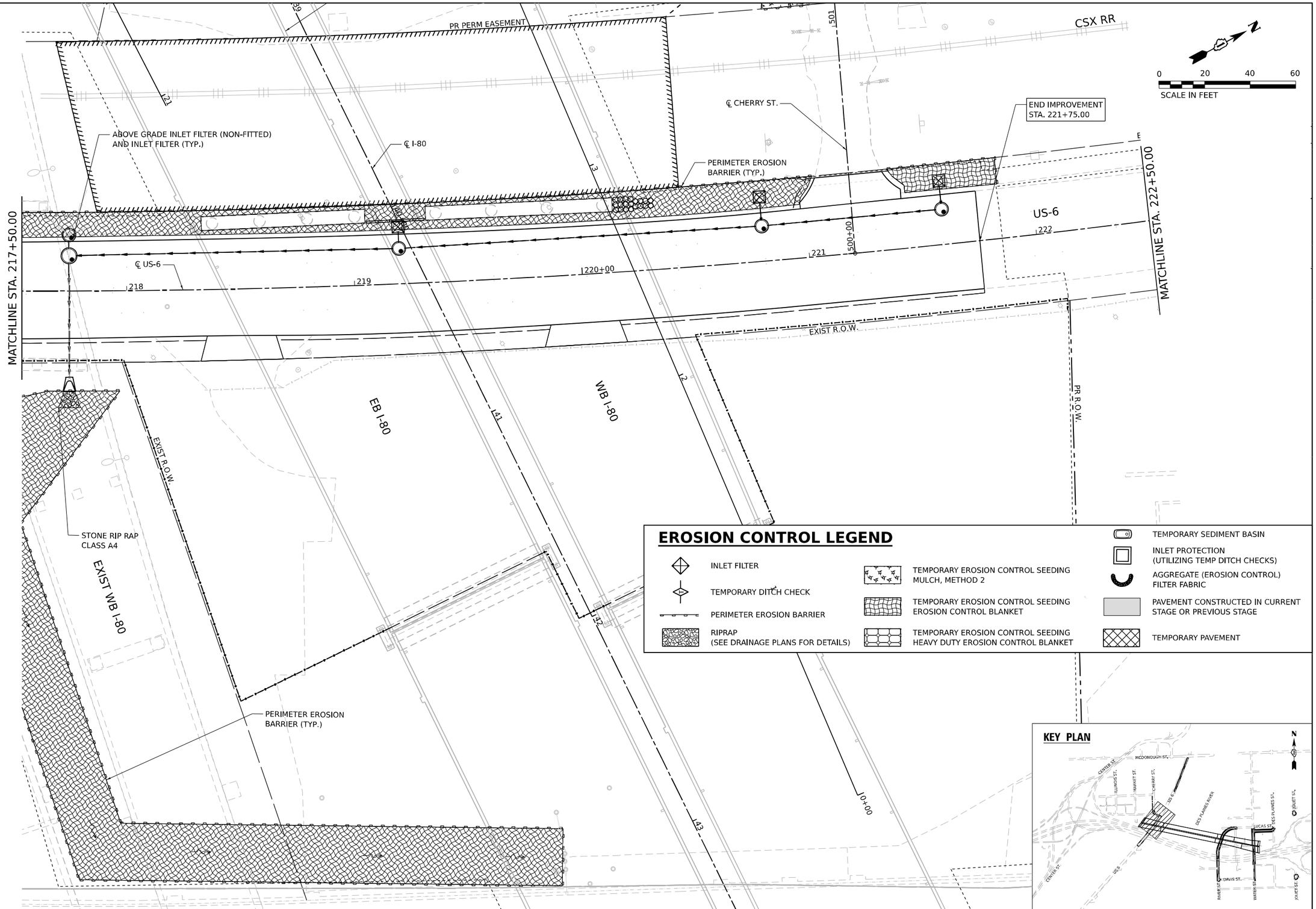

MODEL: Default
FILE NAME: pw://transystems-pw.bentley.com:transyscorp-pw1-hosted/Documents/Projects_2018/CH401/401180022/03-WSP/CAD/62R23-RB-1/Sheets/CivilD162R23-sht-erosLocalRoads-plan12.dgn

WSP USA Inc.
30 N. LASALLE STREET
SUITE 4200
CHICAGO, IL 60602
TEL: (312) 782-8150

USER NAME = USHC706648	DESIGNED - CC	REVISED -
	DRAWN - XL	REVISED -
PLOT SCALE = 40.000 ' / in.	CHECKED - DB	REVISED -
PLOT DATE = 11/6/2025	DATE - 11/7/2025	REVISED -

STATE OF ILLINOIS
DEPARTMENT OF TRANSPORTATION

EROSION CONTROL PLAN
US-6

SCALE: 1"=20' | SHEET 2 OF 12 SHEETS | STA. | TO STA.

F.A.I. RTE.	SECTION	COUNTY	TOTAL SHEETS	SHEET NO.
80	FAI 80 21 STRUCTURE 2	WILL	1230	310
		CONTRACT NO. 62R23		
		ILLINOIS	FED. AID PROJECT	

0 20 40 60
SCALE IN FEET

BEGIN IMPROVEMENT
STA. 226+15.00

CSX RR

CSX RR

EXIST R.O.W.

STA. 226+15.00
OFF. 35.42' LT.

℄ US-6

EXIST R.O.W.

225+00

226

227

228

229

230+00

US-6

EXIST R.O.W.

EXIST R.O.W.

MATCHLINE STA. 230+50.00

COMPENSATORY STORAGE STRUCTURE - JUNCTION CHAMBER 1.
(FOR SIZES AND LOCATIONS, SEE DRAINAGE PLANS,
PROFILES AND DETAILS)

COMPENSATORY STORAGE STRUCTURE - PRC BOX CULVERTS.
(FOR SIZES AND LOCATIONS, SEE DRAINAGE PLANS,
PROFILES AND DETAILS)

COMPENSATORY STORAGE STRUCTURE - JUNCTION CHAMBER 2.
(FOR SIZES AND LOCATIONS, SEE DRAINAGE PLANS,
PROFILES AND DETAILS)

KEY PLAN

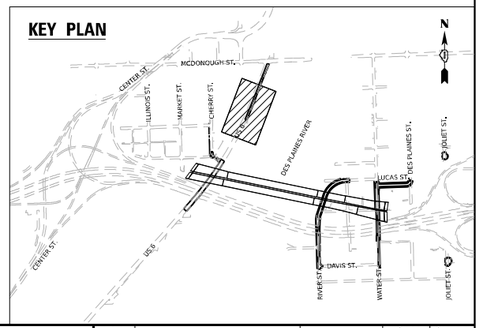

EROSION CONTROL LEGEND

- INLET FILTER
- TEMPORARY DITCH CHECK
- PERIMETER EROSION BARRIER
- RIPRAP (SEE DRAINAGE PLANS FOR DETAILS)
- TEMPORARY EROSION CONTROL SEEDING MULCH, METHOD 2
- TEMPORARY EROSION CONTROL SEEDING EROSION CONTROL BLANKET
- TEMPORARY EROSION CONTROL SEEDING HEAVY DUTY EROSION CONTROL BLANKET
- TEMPORARY SEDIMENT BASIN
- INLET PROTECTION (UTILIZING TEMP DITCH CHECKS)
- AGGREGATE (EROSION CONTROL) FILTER FABRIC
- PAVEMENT CONSTRUCTED IN CURRENT STAGE OR PREVIOUS STAGE
- TEMPORARY PAVEMENT

MODEL: Default
FILE NAME: pw://transystems-pw.bentley.com:transyscorp-pw1-hosted/Documents/Projects_2018/CH401/401180022/03-WSP/CAD/62R23-RB-1/Sheets/CulID162R23-sht-erosLocalRoads-plan13.dgn

WSP USA Inc.
30 N. LASALLE STREET
SUITE 4200
CHICAGO, IL 60602
TEL: (312) 782-8150

USER NAME = USHC706648	DESIGNED - CC	REVISED -	
	DRAWN - XL	REVISED -	
PLOT SCALE = 40.000 ' / in.	CHECKED - DB	REVISED -	
PLOT DATE = 11/6/2025	DATE - 11/7/2025	REVISED -	

STATE OF ILLINOIS
DEPARTMENT OF TRANSPORTATION

EROSION CONTROL PLAN
US–6

SCALE: 1"=20' | SHEET 3 OF 12 SHEETS | STA. | TO STA.

F.A.I. RTE.	SECTION	COUNTY	TOTAL SHEETS	SHEET NO.
80	FAI 80 21 STRUCTURE 2	WILL	1230	311
		CONTRACT NO. 62R23		
	ILLINOIS	FED. AID PROJECT		

0 20 40 60
SCALE IN FEET

CSX RR

STA. 233+13.92
OFF. 26.67' LT

END IMPROVEMENT
STA. 233+22.35

TEMPORARY SOIL RETENTION SYSTEM

CSX RR

℄ US-6

EXIST R.O.W.

MATCHLINE STA. 230+50.00

US-6

231 232 233

EXIST R.O.W.

MCDONOUGH STREET

COMPENSATORY STORAGE STRUCTURE - JUNCTION CHAMBER 3.
(FOR SIZES AND LOCATIONS, SEE DRAINAGE PLANS, PROFILES AND DETAILS)

EXIST R.O.W.

COMPENSATORY STORAGE STRUCTURE - PRC BOX CULVERT.
(FOR SIZE AND LOCATION, SEE DRAINAGE PLANS, PROFILES AND DETAILS)

KEY PLAN

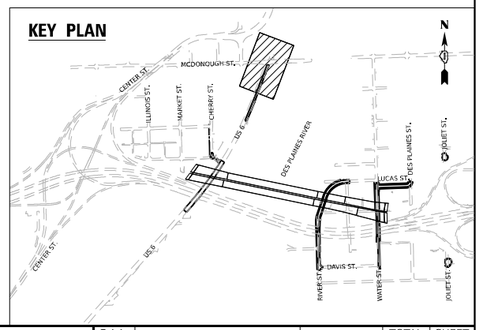

EROSION CONTROL LEGEND

- INLET FILTER
- TEMPORARY DITCH CHECK
- PERIMETER EROSION BARRIER
- RIPRAP (SEE DRAINAGE PLANS FOR DETAILS)
- TEMPORARY EROSION CONTROL SEEDING MULCH, METHOD 2
- TEMPORARY EROSION CONTROL SEEDING EROSION CONTROL BLANKET
- TEMPORARY EROSION CONTROL SEEDING HEAVY DUTY EROSION CONTROL BLANKET
- TEMPORARY SEDIMENT BASIN
- INLET PROTECTION (UTILIZING TEMP DITCH CHECKS)
- AGGREGATE (EROSION CONTROL) FILTER FABRIC
- PAVEMENT CONSTRUCTED IN CURRENT STAGE OR PREVIOUS STAGE
- TEMPORARY PAVEMENT

MODEL: Default
FILE NAME: pw://transystems-pw.bentley.com:transyscorp-pw1-hosted/Documents/Projects_2018/CH401/401180022/03-WSP/CAD/62R23-RB-1/Sheets/CulID162R23-sht-erosLocalRoads-plan13-2.dgn

WSP USA Inc.
30 N. LASALLE STREET
SUITE 4200
CHICAGO, IL 60602
TEL: (312) 782-8350

USER NAME = USHC706648	DESIGNED - CC	REVISED -
	DRAWN - XL	REVISED -
PLOT SCALE = 40.000 ' / in.	CHECKED - DB	REVISED -
PLOT DATE = 11/6/2025	DATE - 11/7/2025	REVISED -

STATE OF ILLINOIS
DEPARTMENT OF TRANSPORTATION

EROSION CONTROL PLAN
US–6

SCALE: 1"=20' | SHEET 4 OF 12 SHEETS | STA. | TO STA.

F.A.I. RTE.	SECTION	COUNTY	TOTAL SHEETS	SHEET NO.
80	FAI 80 21 STRUCTURE 2	WILL	1230	312
		CONTRACT NO. 62R23		
		ILLINOIS	FED. AID PROJECT	

EROSION CONTROL LEGEND

- INLET FILTER
- TEMPORARY DITCH CHECK
- PERIMETER EROSION BARRIER
- RIPRAP (SEE DRAINAGE PLANS FOR DETAILS)
- TEMPORARY EROSION CONTROL SEEDING MULCH, METHOD 2
- TEMPORARY EROSION CONTROL SEEDING EROSION CONTROL BLANKET
- TEMPORARY EROSION CONTROL SEEDING HEAVY DUTY EROSION CONTROL BLANKET
- TEMPORARY SEDIMENT BASIN
- INLET PROTECTION (UTILIZING TEMP DITCH CHECKS)
- AGGREGATE (EROSION CONTROL) FILTER FABRIC
- PAVEMENT CONSTRUCTED IN CURRENT STAGE OR PREVIOUS STAGE
- TEMPORARY PAVEMENT

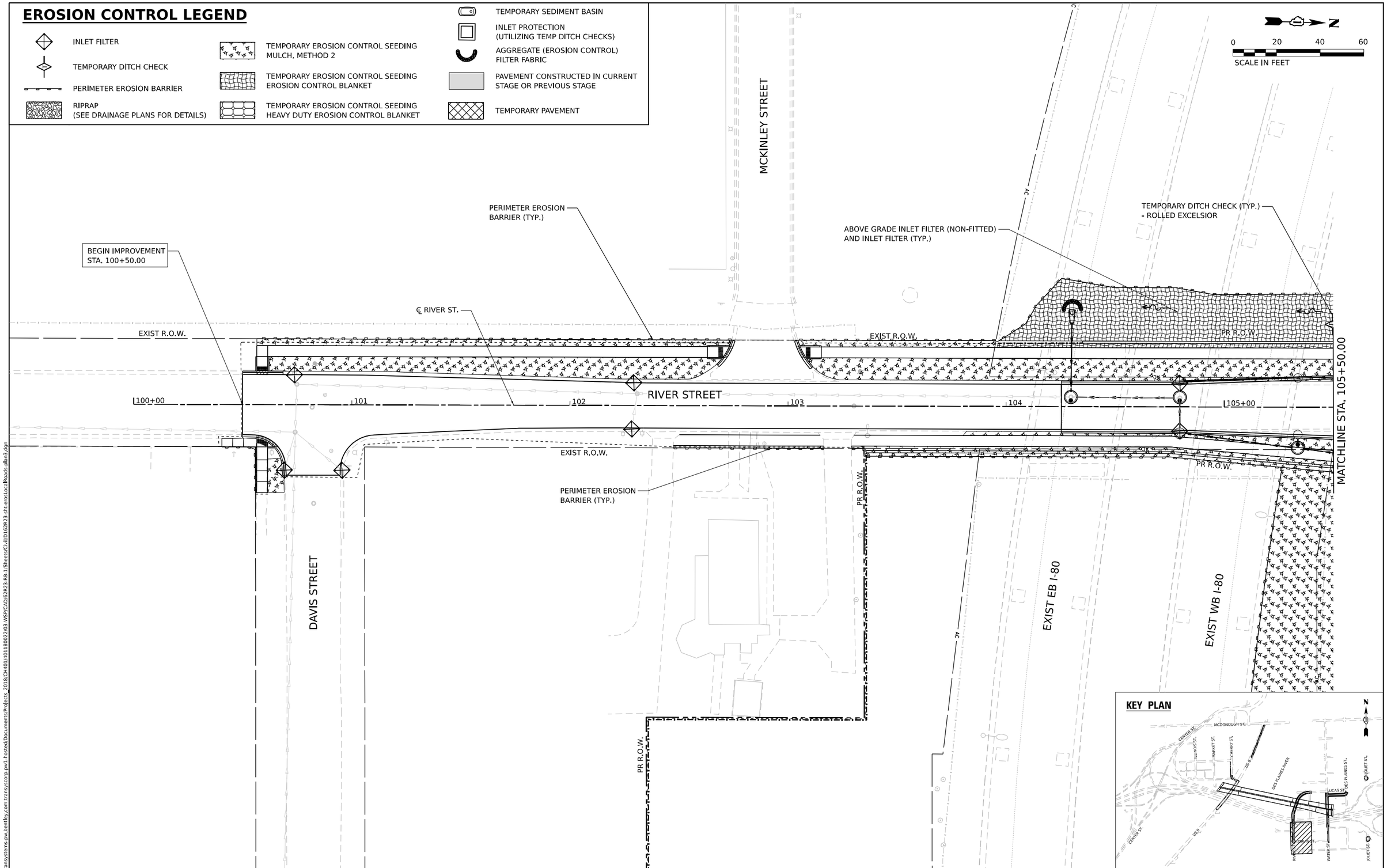

MODEL: Default
FILE NAME: pw://transystems-pw.bentley.com:transyscorp-pw1-hosted/Documents/Projects_2018/CH401/401180022/03-WSP/CAD/62R23-RB-1/Sheets/Civil/0162R23-sht-erosLocalRoads-plh3.dgn

WSP USA Inc.
30 N. LASALLE STREET
SUITE 4200
CHICAGO, IL 60602
TEL: (312) 782-8150

USER NAME = USHC706648	DESIGNED - CC	REVISED -	
	DRAWN - XL	REVISED -	
PLOT SCALE = 40.000 ' / in.	CHECKED - DB	REVISED -	
PLOT DATE = 11/6/2025	DATE - 11/7/2025	REVISED -	

STATE OF ILLINOIS
DEPARTMENT OF TRANSPORTATION

EROSION CONTROL PLAN
RIVER STREET

SCALE: 1"=20' | SHEET 5 OF 12 SHEETS | STA. | TO STA.

F.A.I. RTE.	SECTION	COUNTY	TOTAL SHEETS	SHEET NO.
80	FAI 80 21 STRUCTURE 2	WILL	1230	313
		CONTRACT NO. 62R23		
		ILLINOIS	FED. AID PROJECT	

EROSION CONTROL LEGEND

- INLET FILTER
- TEMPORARY DITCH CHECK
- PERIMETER EROSION BARRIER
- RIPRAP (SEE DRAINAGE PLANS FOR DETAILS)
- TEMPORARY EROSION CONTROL SEEDING MULCH, METHOD 2
- TEMPORARY EROSION CONTROL SEEDING EROSION CONTROL BLANKET
- TEMPORARY EROSION CONTROL SEEDING HEAVY DUTY EROSION CONTROL BLANKET
- TEMPORARY SEDIMENT BASIN
- INLET PROTECTION (UTILIZING TEMP DITCH CHECKS)
- AGGREGATE (EROSION CONTROL) FILTER FABRIC
- PAVEMENT CONSTRUCTED IN CURRENT STAGE OR PREVIOUS STAGE
- TEMPORARY PAVEMENT

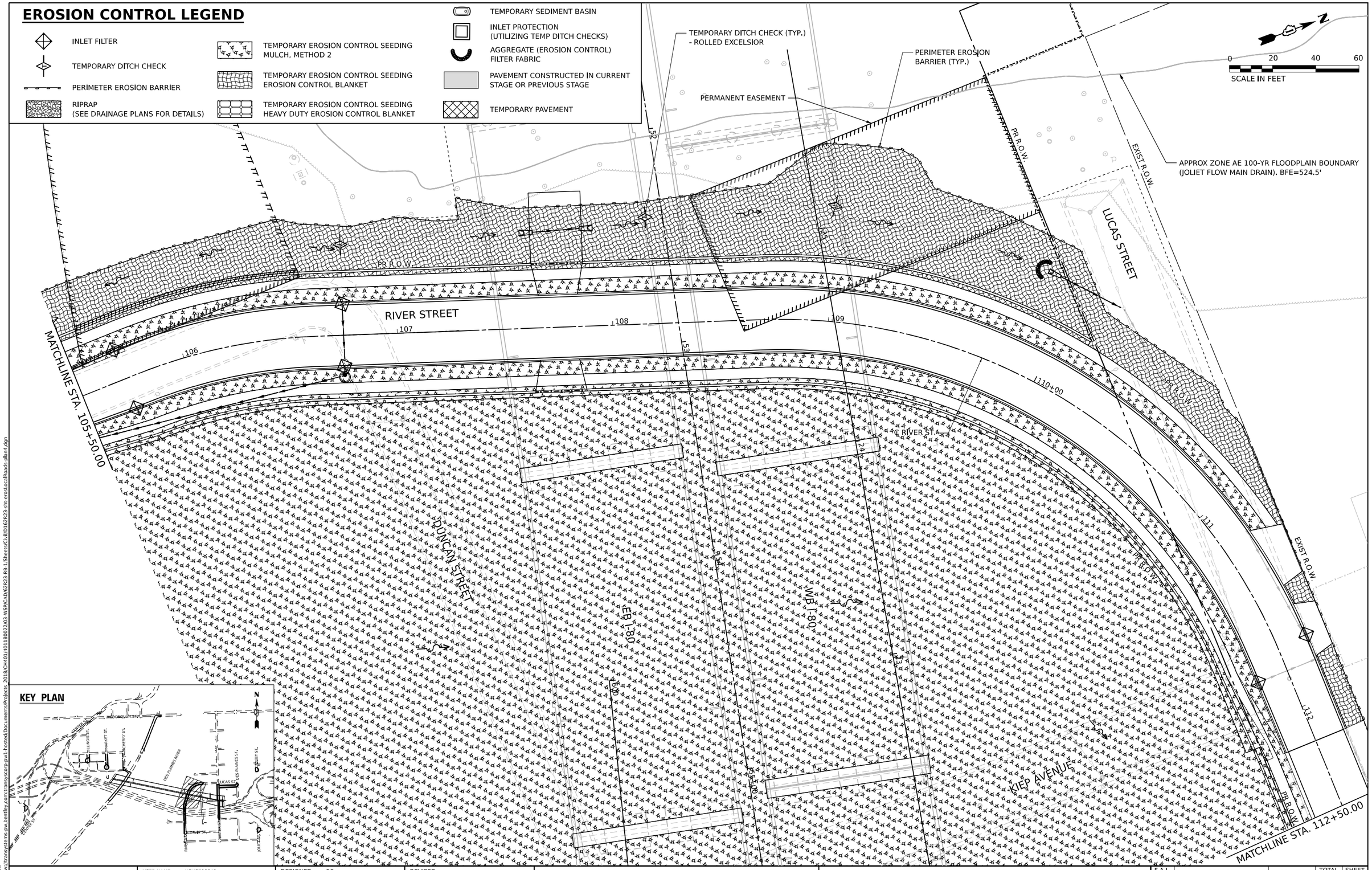

KEY PLAN

WSP USA Inc.
30 N. LASALLE STREET
SUITE 4200
CHICAGO, IL 60602
TEL: (312) 782-8150

USER NAME = USHC706648	DESIGNED - CC	REVISED -	
	DRAWN - XL	REVISED -	
PLOT SCALE = 40.000 ' / in.	CHECKED - DB	REVISED -	
PLOT DATE = 11/6/2025	DATE - 11/7/2025	REVISED -	

STATE OF ILLINOIS
DEPARTMENT OF TRANSPORTATION

EROSION CONTROL PLAN
RIVER STREET

SCALE: 1"=20' | SHEET 6 OF 12 SHEETS | STA. | TO STA.

F.A.I. RTE.	SECTION	COUNTY	TOTAL SHEETS	SHEET NO.
80	FAI 80 21 STRUCTURE 2	WILL	1230	314
		CONTRACT NO. 62R23		
	ILLINOIS	FED. AID PROJECT		

MODEL: Default
FILE NAME: pw://transystems-pw.bentley.com:transystcorp-pw1-hosted/Documents/Projects_2018/CH401/401180022/03-WSP/CAD/62R23-RB-1/Sheets/Civil/D162R23-sht-eroLoc1Roads-plan4.dgn

EROSION CONTROL LEGEND

- INLET FILTER
- TEMPORARY DITCH CHECK
- PERIMETER EROSION BARRIER
- RIPRAP (SEE DRAINAGE PLANS FOR DETAILS)
- TEMPORARY EROSION CONTROL SEEDING MULCH, METHOD 2
- TEMPORARY EROSION CONTROL SEEDING EROSION CONTROL BLANKET
- TEMPORARY EROSION CONTROL SEEDING HEAVY DUTY EROSION CONTROL BLANKET
- TEMPORARY SEDIMENT BASIN
- INLET PROTECTION (UTILIZING TEMP DITCH CHECKS)
- AGGREGATE (EROSION CONTROL) FILTER FABRIC
- PAVEMENT CONSTRUCTED IN CURRENT STAGE OR PREVIOUS STAGE
- TEMPORARY PAVEMENT

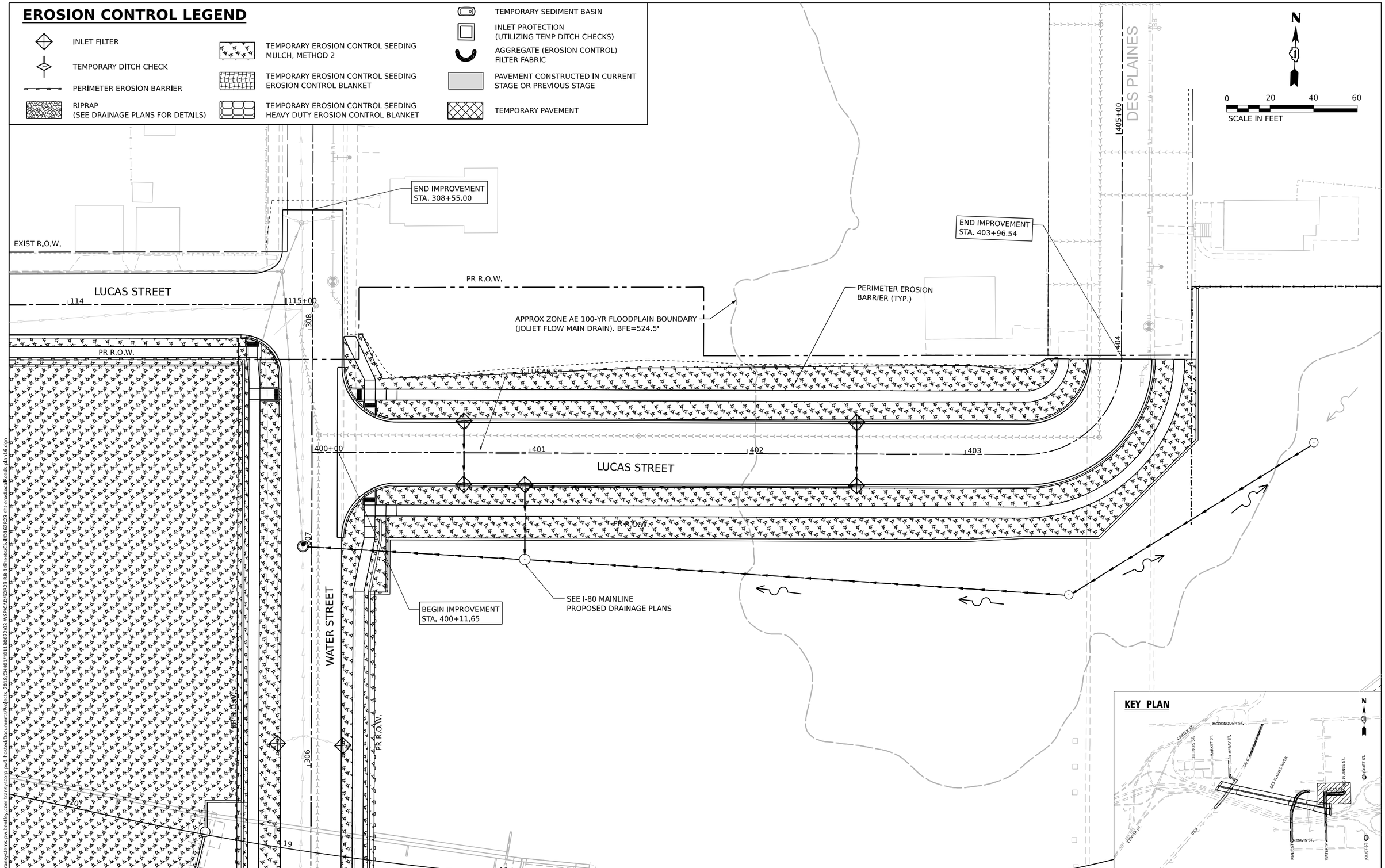

MODEL: Default
FILE NAME: pw://transystems-pw.bentley.com:transyscorp-pw1-hosted/Documents/Projects_2018/CH401/401180022/03-WSP/CAD/62R23-RB-1/Sheets/Civil/D162R23-sht-erosl.ctb/Roads-plan16.dgn

WSP USA Inc.
30 N. LASALLE STREET
SUITE 4200
CHICAGO, IL 60602
TEL: (312) 782-8150

USER NAME = USHC706648	DESIGNED - CC	REVISED -
	DRAWN - XL	REVISED -
PLOT SCALE = 40.000 ' / in.	CHECKED - DB	REVISED -
PLOT DATE = 11/6/2025	DATE - 11/7/2025	REVISED -

STATE OF ILLINOIS
DEPARTMENT OF TRANSPORTATION

EROSION CONTROL PLAN
LUCAS STREET

SCALE: 1"=20' | SHEET 7 OF 12 SHEETS | STA. | TO STA.

F.A.I. RTE.	SECTION	COUNTY	TOTAL SHEETS	SHEET NO.
80	FAI 80 21 STRUCTURE 2	WILL	1230	315
		CONTRACT NO. 62R23		
	ILLINOIS	FED. AID PROJECT		

I-80 EB OVER DES PLAINES RIVER
SN 099-8325

℄ I-80

DUNCAN STREET

APPROX ZONE AE 100-YR FLOODPLAIN BOUNDARY
(JOLIET FLOW MAIN DRAIN). BFE=524.5'

PERIMETER EROSION
BARRIER (TYP.)

EXIST EB I-80

EXIST WB I-80

℄ WATER ST.

PR R.O.W.

PR R.O.W.

300+00 301 302 303 304 305+00

WATER STREET

EXIST R.O.W.

PR R.O.W.

EXIST R.O.W.

MATCHLINE STA. 305+50.00

EB I-80

WB I-80

160+00

0 20 40 60
SCALE IN FEET

KEY PLAN

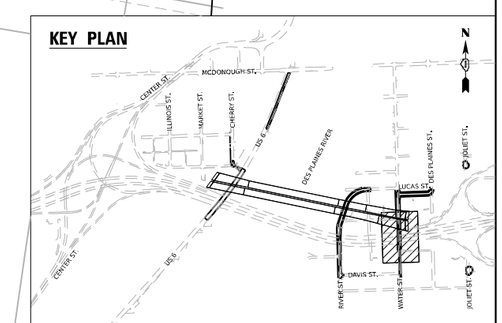

EROSION CONTROL LEGEND

- INLET FILTER
- TEMPORARY DITCH CHECK
- PERIMETER EROSION BARRIER
- RIPRAP (SEE DRAINAGE PLANS FOR DETAILS)
- TEMPORARY EROSION CONTROL SEEDING MULCH, METHOD 2
- TEMPORARY EROSION CONTROL SEEDING EROSION CONTROL BLANKET
- TEMPORARY EROSION CONTROL SEEDING HEAVY DUTY EROSION CONTROL BLANKET
- TEMPORARY SEDIMENT BASIN
- INLET PROTECTION (UTILIZING TEMP DITCH CHECKS)
- AGGREGATE (EROSION CONTROL) FILTER FABRIC
- PAVEMENT CONSTRUCTED IN CURRENT STAGE OR PREVIOUS STAGE
- TEMPORARY PAVEMENT

MODEL: Default
FILE NAME: pw://transystems-pw.bentley.com:transyscorp-pw1-hosted/Documents/Projects_2018/CH401/401180022/03-WSP/CAD/62R23-RB-1/Sheets/Civil/0162R23-sht-erosLocalRoads-pln14.dgn

WSP USA Inc.
30 N. LASALLE STREET
SUITE 4200
CHICAGO, IL 60602
TEL: (312) 782-8150

USER NAME = USHC706648	DESIGNED - CC	REVISED -	
	DRAWN - XL	REVISED -	
PLOT SCALE = 40.000 ' / in.	CHECKED - DB	REVISED -	
PLOT DATE = 11/6/2025	DATE - 11/7/2025	REVISED -	

STATE OF ILLINOIS
DEPARTMENT OF TRANSPORTATION

EROSION CONTROL PLAN
WATER STREET

SCALE: 1"=20' | SHEET 8 OF 12 SHEETS | STA. TO STA.

F.A.I. RTE.	SECTION	COUNTY	TOTAL SHEETS	SHEET NO.
80	FAI 80 21 STRUCTURE 2	WILL	1230	316
		CONTRACT NO. 62R23		
		ILLINOIS	FED. AID PROJECT	

EROSION CONTROL LEGEND

- INLET FILTER
- TEMPORARY DITCH CHECK
- PERIMETER EROSION BARRIER
- RIPRAP (SEE DRAINAGE PLANS FOR DETAILS)
- TEMPORARY EROSION CONTROL SEEDING MULCH, METHOD 2
- TEMPORARY EROSION CONTROL SEEDING EROSION CONTROL BLANKET
- TEMPORARY EROSION CONTROL SEEDING HEAVY DUTY EROSION CONTROL BLANKET
- TEMPORARY SEDIMENT BASIN
- INLET PROTECTION (UTILIZING TEMP DITCH CHECKS)
- AGGREGATE (EROSION CONTROL) FILTER FABRIC
- PAVEMENT CONSTRUCTED IN CURRENT STAGE OR PREVIOUS STAGE
- TEMPORARY PAVEMENT

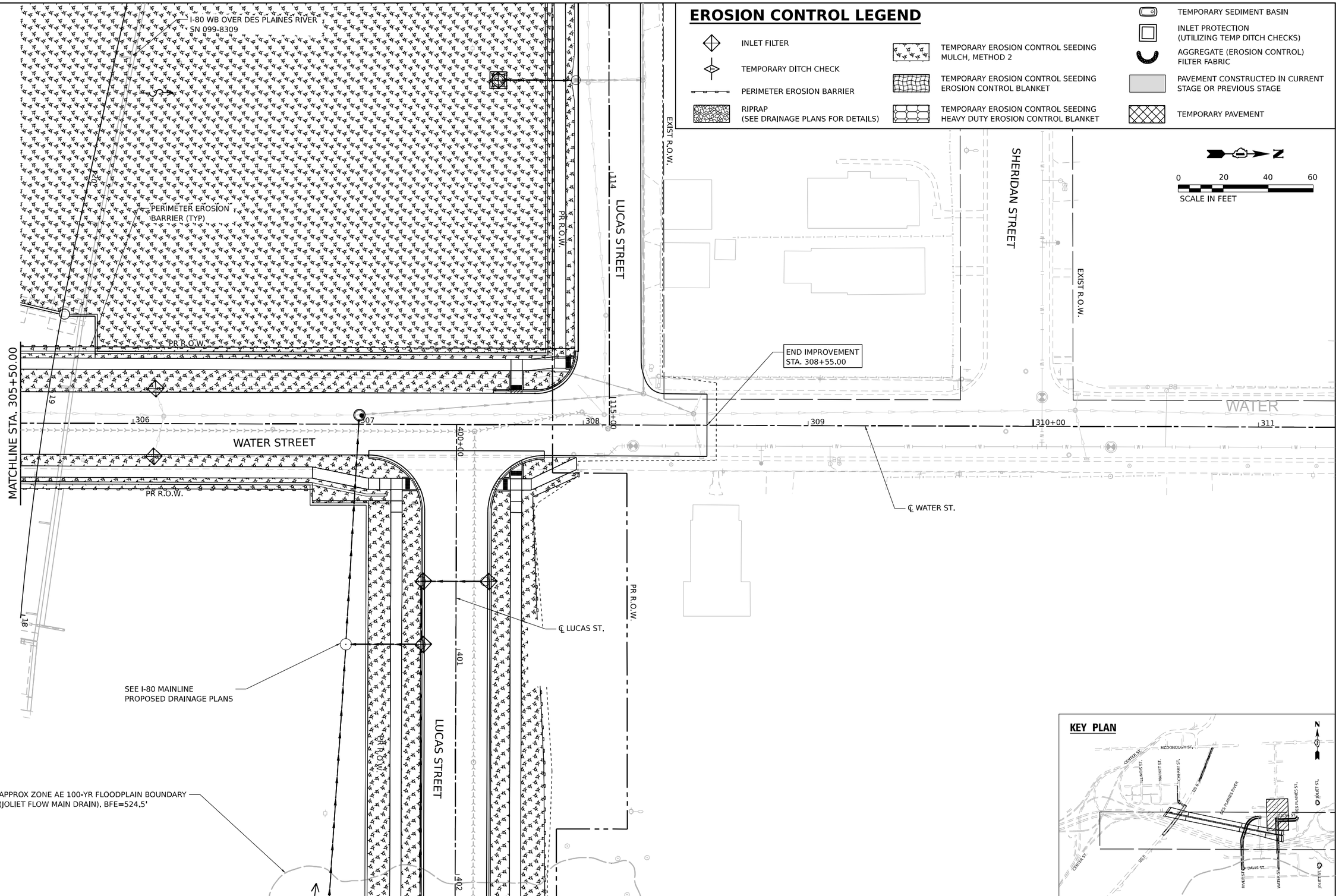

MODEL: Default
FILE NAME: pw://transystems-pw.bentley.com:transyscorp-pw1-hosted/Documents/Projects_2018/CH401/401180022/03-WSP/CAD/62R23-RB-1/Sheets/Civil/0162R23-ph-erosLocalRoads-plan15.dgn

WSP USA Inc.
30 N. LASALLE STREET
SUITE 4200
CHICAGO, IL 60602
TEL: (312) 782-8150

USER NAME = USHC706648	DESIGNED - CC	REVISED -	
	DRAWN - XL	REVISED -	
PLOT SCALE = 40.000 ' / in.	CHECKED - DB	REVISED -	
PLOT DATE = 11/6/2025	DATE - 11/7/2025	REVISED -	

STATE OF ILLINOIS
DEPARTMENT OF TRANSPORTATION

EROSION CONTROL PLAN
WATER STREET

SCALE: 1"=20' | SHEET 9 OF 12 SHEETS | STA. | TO STA.

F.A.I. RTE.	SECTION	COUNTY	TOTAL SHEETS	SHEET NO.
80	FAI 80 21 STRUCTURE 2	WILL	1230	317
		CONTRACT NO. 62R23		
	ILLINOIS	FED. AID PROJECT		

EROSION CONTROL LEGEND

- INLET FILTER
- TEMPORARY DITCH CHECK
- PERIMETER EROSION BARRIER
- RIPRAP (SEE DRAINAGE PLANS FOR DETAILS)
- TEMPORARY EROSION CONTROL SEEDING MULCH, METHOD 2
- TEMPORARY EROSION CONTROL SEEDING EROSION CONTROL BLANKET
- TEMPORARY EROSION CONTROL SEEDING HEAVY DUTY EROSION CONTROL BLANKET
- TEMPORARY SEDIMENT BASIN
- INLET PROTECTION (UTILIZING TEMP DITCH CHECKS)
- AGGREGATE (EROSION CONTROL) FILTER FABRIC
- PAVEMENT CONSTRUCTED IN CURRENT STAGE OR PREVIOUS STAGE
- TEMPORARY PAVEMENT

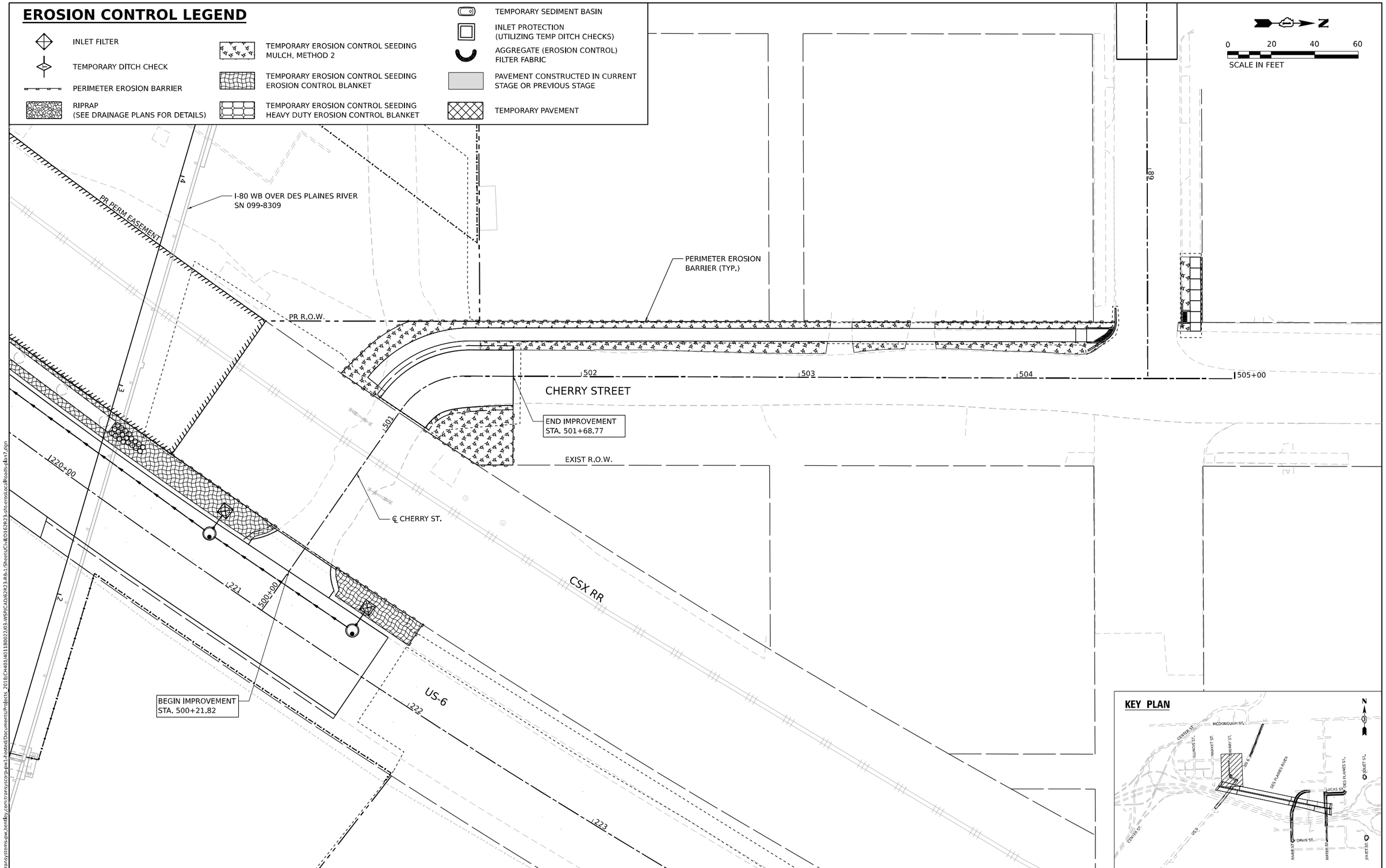

MODEL: Default
FILE NAME: pw://transystems-pw.bentley.com:transyscorp-pw1-hosted/Documents/Projects_2018/CH401/401180022/03-WSP/CAD/62R23-RB-1/Sheets/CHLD162R23-sht-erosion-plan7.dgn

WSP USA Inc.
20 N. LASALLE STREET
SUITE 4200
CHICAGO, IL 60602
TEL: (312) 782-8150

USER NAME = USHC706648	DESIGNED - CC	REVISED -	
	DRAWN - XL	REVISED -	
PLOT SCALE = 40.000 ' / in.	CHECKED - DB	REVISED -	
PLOT DATE = 11/6/2025	DATE - 11/7/2025	REVISED -	

STATE OF ILLINOIS
DEPARTMENT OF TRANSPORTATION

EROSION CONTROL PLAN
CHERRY STREET

SCALE: 1"=20' | SHEET 10 OF 12 SHEETS | STA. | TO STA.

F.A.I. RTE.	SECTION	COUNTY	TOTAL SHEETS	SHEET NO.
80	FAI 80 21 STRUCTURE 2	WILL	1230	318
		CONTRACT NO. 62R23		
	ILLINOIS	FED. AID PROJECT		

EROSION CONTROL LEGEND

- INLET FILTER
- TEMPORARY DITCH CHECK
- PERIMETER EROSION BARRIER
- RIPRAP (SEE DRAINAGE PLANS FOR DETAILS)
- TEMPORARY EROSION CONTROL SEEDING MULCH, METHOD 2
- TEMPORARY EROSION CONTROL SEEDING EROSION CONTROL BLANKET
- TEMPORARY EROSION CONTROL SEEDING HEAVY DUTY EROSION CONTROL BLANKET
- TEMPORARY SEDIMENT BASIN
- INLET PROTECTION (UTILIZING TEMP DITCH CHECKS)
- AGGREGATE (EROSION CONTROL) FILTER FABRIC
- PAVEMENT CONSTRUCTED IN CURRENT STAGE OR PREVIOUS STAGE
- TEMPORARY PAVEMENT

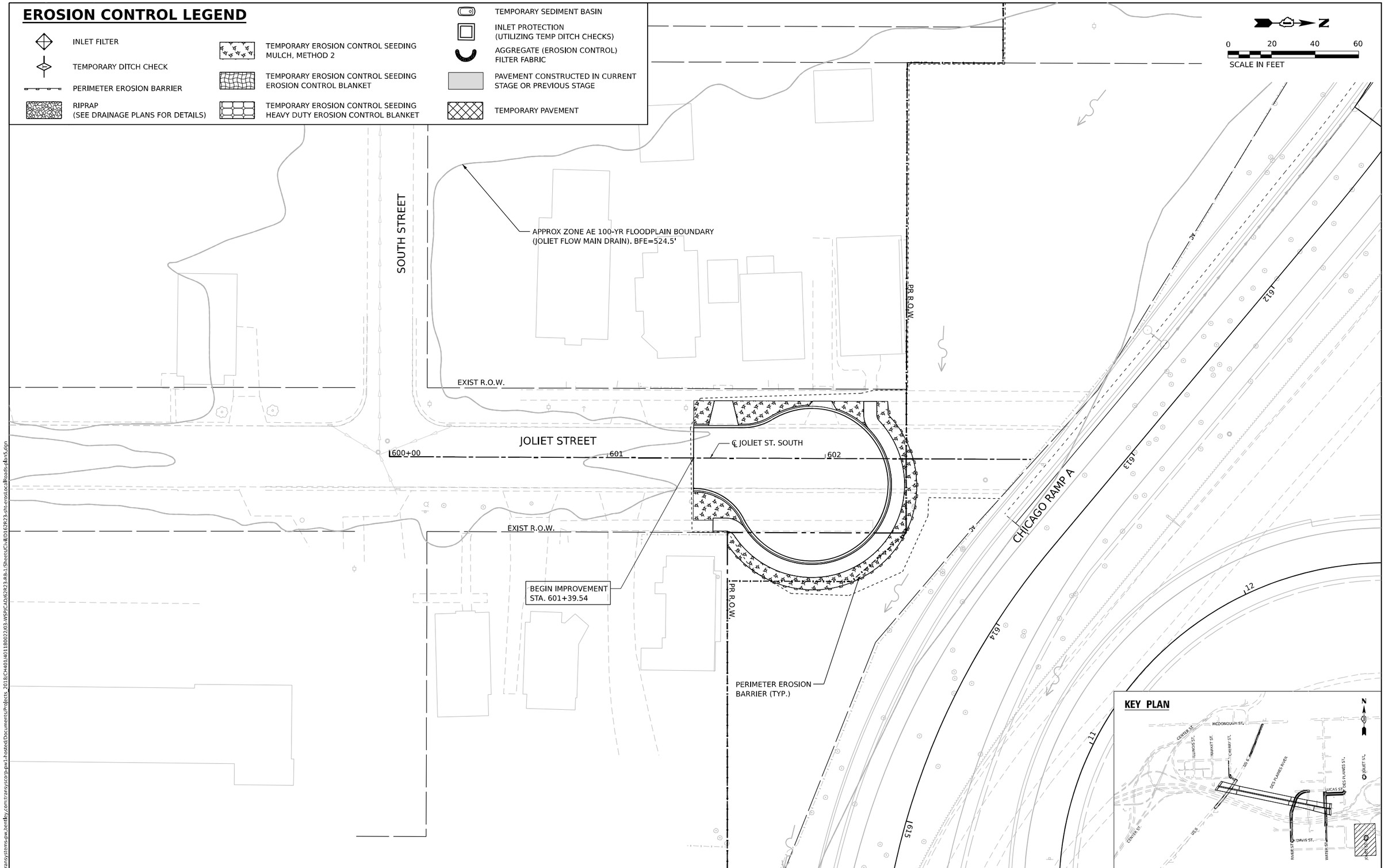

MODEL: Default
FILE NAME: pw://transystems-pw.bentley.com:transyscorp-pw1-hosted/Documents/Projects_2018/CH401/401180022/03-WSP/CAD/62R23-RB-1/Sheets/Civil/D162R23-sht-eroplan-Roads-plan5.dgn

WSP USA Inc.
30 N. LASALLE STREET
SUITE 4200
CHICAGO, IL 60602
TEL: (312) 782-8150

USER NAME = USHC706648	DESIGNED -	REVISED -	
	DRAWN -	REVISED -	
PLOT SCALE = 40.000 ' / in.	CHECKED -	REVISED -	
PLOT DATE = 11/6/2025	DATE - 11/7/2025	REVISED -	

STATE OF ILLINOIS
DEPARTMENT OF TRANSPORTATION

EROSION CONTROL PLAN
JOLIET STREET – SOUTH

SCALE: 1"=20' | SHEET 11 OF 12 SHEETS | STA. TO STA.

F.A.I. RTE.	SECTION	COUNTY	TOTAL SHEETS	SHEET NO.
80	FAI 80 21 STRUCTURE 2	WILL	1230	319
		CONTRACT NO. 62R23		
		ILLINOIS	FED. AID PROJECT	

EROSION CONTROL LEGEND

- INLET FILTER
- TEMPORARY DITCH CHECK
- PERIMETER EROSION BARRIER
- RIPRAP (SEE DRAINAGE PLANS FOR DETAILS)
- TEMPORARY EROSION CONTROL SEEDING MULCH, METHOD 2
- TEMPORARY EROSION CONTROL SEEDING EROSION CONTROL BLANKET
- TEMPORARY EROSION CONTROL SEEDING HEAVY DUTY EROSION CONTROL BLANKET
- TEMPORARY SEDIMENT BASIN
- INLET PROTECTION (UTILIZING TEMP DITCH CHECKS)
- AGGREGATE (EROSION CONTROL) FILTER FABRIC
- PAVEMENT CONSTRUCTED IN CURRENT STAGE OR PREVIOUS STAGE
- TEMPORARY PAVEMENT

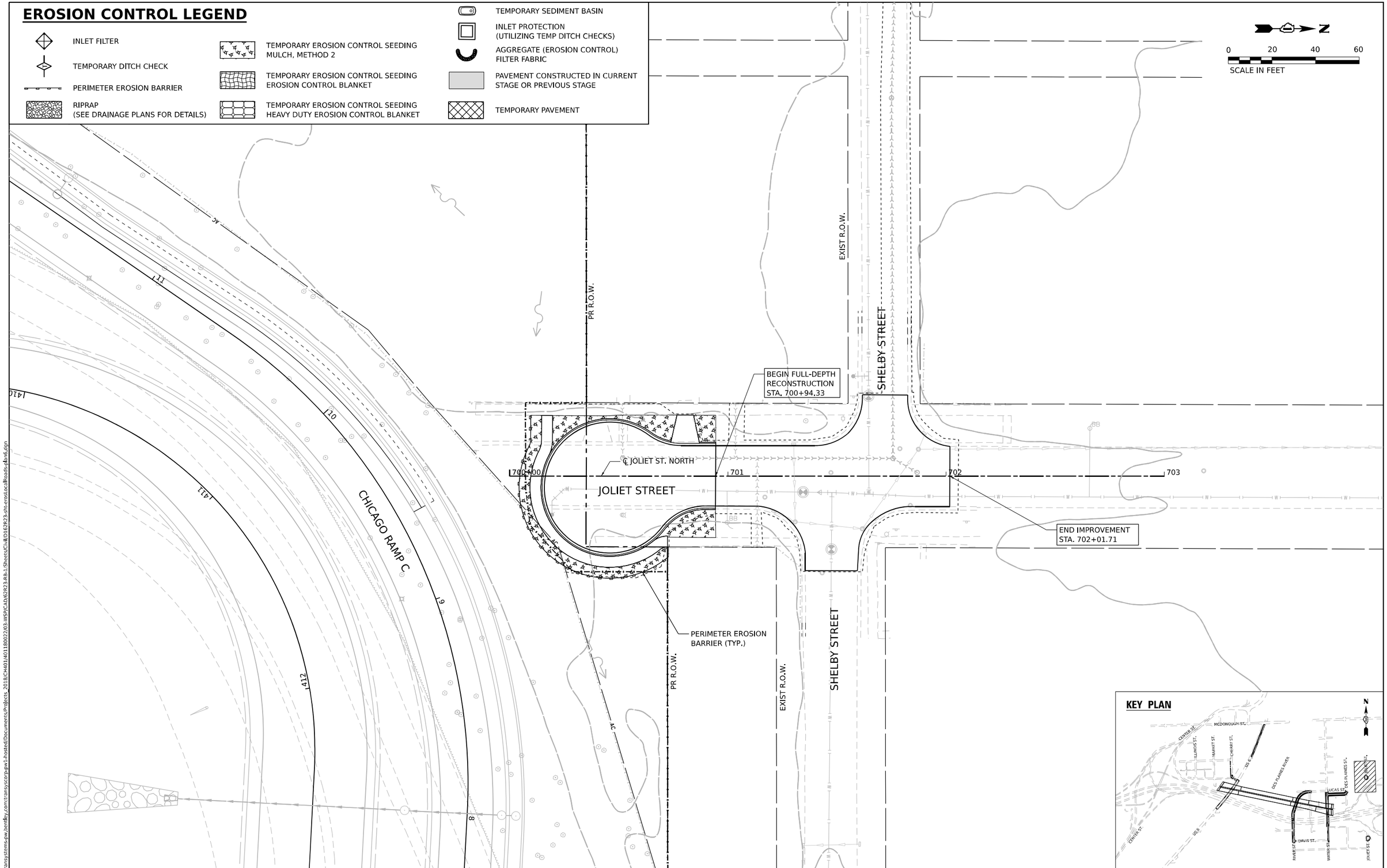

MODEL: Default
FILE NAME: pw://transystems-pw.bentley.com:transyscorp-pw1-hosted/Documents/Projects_2018/CH401/401180022/03-WSP/CAD/62R23-RB-1/Sheets/Civil/0162R23-ph1-erosLocalRoads-plan6.dgn

WSP USA Inc.
30 N. LASALLE STREET
SUITE 4200
CHICAGO, IL 60602
TEL: (312) 782-8150

USER NAME = USHC706648	DESIGNED - CC	REVISED -
	DRAWN - XL	REVISED -
PLOT SCALE = 40.000 ' / in.	CHECKED - DB	REVISED -
PLOT DATE = 11/6/2025	DATE - 11/7/2025	REVISED -

STATE OF ILLINOIS
DEPARTMENT OF TRANSPORTATION

EROSION CONTROL PLAN
JOLIET STREET – NORTH

SCALE: 1"=20' | SHEET 12 OF 12 SHEETS | STA. | TO STA.

F.A.I. RTE.	SECTION	COUNTY	TOTAL SHEETS	SHEET NO.
80	FAI 80 21 STRUCTURE 2	WILL	1230	320
		CONTRACT NO. 62R23		
		ILLINOIS	FED. AID PROJECT	

EXISTING DRAINAGE & UTILITY LEGEND

STORM SEWER		SANITARY SEWER	
WATER MAIN		AERIAL LINE	
ELECTRIC		END SECTION	
GAS		MANHOLE (MH)	
FIBER OPTIC		INLET	
		CATCH BASIN (CB)	

FIBER OPTIC MCI
6" WATER MAIN JOLIET
4" CONDUIT GAS MAIN NICOR
4" CONDUIT ELECTRIC COMED
WATER MAIN
4" CONDUIT ELECTRIC SERVICE
4" CONDUIT GAS MAIN NICOR
4" CONDUIT GAS MAIN NICOR
MARKET ST.
CHERRY ST.
CSX RAILROAD
US 6/ RAILROAD ST.
℄ CHERRY ST.
℄ MARKET ST.
PR R.O.W.
PR R.O.W.
PR R.O.W.
UNKNOWN MH
RIM ELEV=564.34'
NOTE: FULL OF DEBRIS
1.5" WATER MAIN JOLIET
UNKNOWN MH
RIM ELEV=562.49'
NOTE: LID IS HARD TO OPEN
6" WATER MAIN JOLIET
15" CMP
INVERT= 540.22'
PR PERM EASEMENT
540.90' INVERT OF 15"CMP
15" CMP
INVERT= 540.90'
540.22' INVERT OF 15"CMP
4" CONDUIT GAS MAIN NICOR
EDGE OF RETAINING WALL (GROUND LEVEL)
℄ CENTER RAMP C
UTILITY CONDUITS
BEGIN PROJECT
STA. 37+89.00
DES PLAINES RIVER
℄ I-80
MATCHLINE STA. 50+00.00
UNVERIFIED SIZE FIBER OPTIC MCI
PUMP STATION
CWA# 10670
RIM=533.70
CONCRETE PAD
MANHOLES (LOCKED)
CWA# 10671
RIM=533.65
℄ CENTER RAMP B
MH# CWA10000
RIM=540.35
CWA# 10668
RIM=533.38
GRAVEL & STONE STOCKPILE
THESE 3 MANHOLES SHARE A COMMON VAULT WITH APPROX. SIZE OF 6 FEET TO 8 FEET WIDE (SEE PHOTO)
CWA# 10669
RIM=533.62
BOTTOM OF STRUCTURE = 6.90'
WATER LEVEL = 3.80'
STREET LIGHTING
IDOT
ABLE TO OPEN LID
CATION IS IN LIVE TRAFFIC AND DANGEROUS
THOUT IDOT LANE CLOSURE
PR PERM EASEMENT
INLET
RIM ELEV=539.47'
E INVERT 538.02' 12"RCP
EXIST R.O.W.
TMH #438
IM=574.41
MANHOLE (NOT FOUND)
STORM MH
RIM ELEV=540.07'
W INVERT 536.33' 12"RCP
NW INVERT 535.97' 24"RCP
SE INVERT 535.77' 24"RCP
NE INVERT 537.06' 8"DIP
EXIST WB I-80
STREET LIGHTING
IDOT
0.75" DBC
TELEPHONE
AT&T
6" WATER MAIN JOLIET
EXIST R.O.W.
EXIST R.O.W.
EXIST EB I-80
UNKNOWN UTILITY
2" EMPTY CONDUITS
DRAINAGE STRUCTURE (NOT FOUND)
℄ US-6
INLETS / END SECTIONS NOT FOUND IN THIS AREA
LEV=572.84'
ERT 566.03' 24"RCP
ERT 569.84' 15"RCP
VERT 565.89' 24"RCP
CSX RAILROAD
4" CONDUIT GAS MAIN NICOR
US 6/ RAILROAD ST.
UNVERIFIED SIZE FIBER OPTIC IDOT
UNKNOWN MH
RIM ELEV=539.35'
NOTE: LID IS BOLTED
DES PLAINES RIVER
N
0 50 100 150
SCALE IN FEET

KEY PLAN

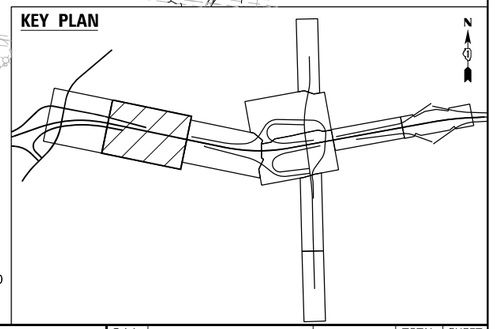

MODEL: Default
FILE NAME: pw://transystems-pw.bentley.com:transyscorp-pw1-hosted/Documents/Projects_2018/CH401/401180022/03-WSP/CAD/62R23-RB-1/Sheets/CwlID162R23-sht-drainEx1.dgn

WSP USA Inc.
30 N. LASALLE STREET
SUITE 4200
CHICAGO, IL 60602
TEL: (312) 782-8150

USER NAME = USHC706648	DESIGNED - SSM	REVISED -	
	DRAWN - CC	REVISED -	
PLOT SCALE = 100.000 ' / in.	CHECKED - HC	REVISED -	
PLOT DATE = 11/6/2025	DATE - 11/7/2025	REVISED -	

STATE OF ILLINOIS
DEPARTMENT OF TRANSPORTATION

EXISTING DRAINAGE AND UTILITIES PLAN
I-80

SCALE: 1" = 50' | SHEET 1 OF 4 SHEETS | STA. | TO STA.

F.A.I. RTE.	SECTION	COUNTY	TOTAL SHEETS	SHEET NO.
80	FAI 80 21 STRUCTURE 2	WILL	1230	321
		CONTRACT NO. 62R23		
		ILLINOIS	FED. AID PROJECT	

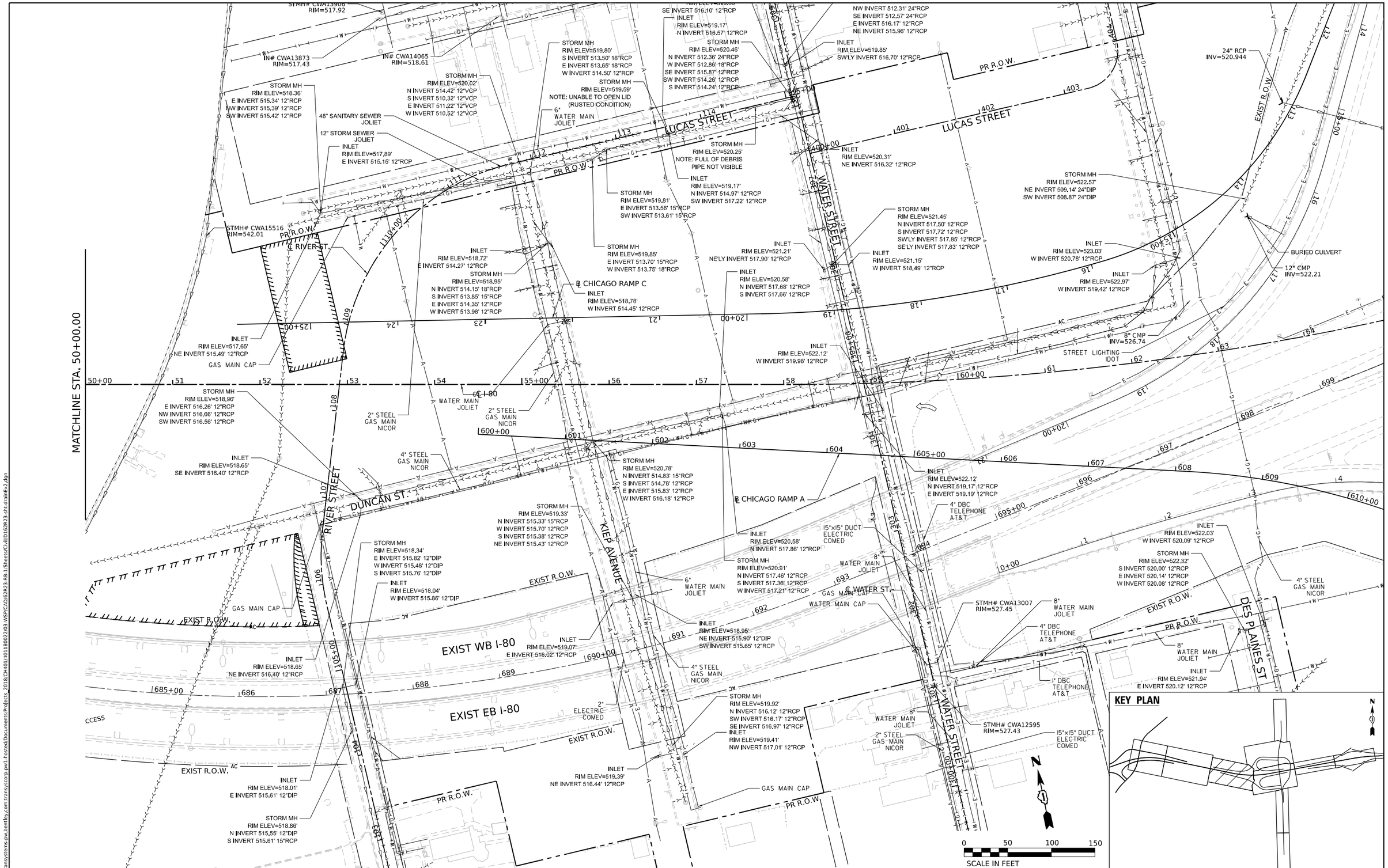

MODEL: Default
FILE NAME: pw://transystems-pw.bentley.com:transyscorp-pw1-hosted/Documents/Projects_2018/CH401/401180022/03-WSP/CAD/62R23-RB-1/Sheets/Civil/D1 62R23-sht-drainEx2.dgn

WSP USA Inc.
30 N. LASALLE STREET
SUITE 4200
CHICAGO, IL 60602
TEL: (312) 782-8150

USER NAME = USHC706648	DESIGNED - SSM	REVISED -	
	DRAWN - CC	REVISED -	
PLOT SCALE = 100.000 ' / in.	CHECKED - HC	REVISED -	
PLOT DATE = 11/6/2025	DATE - 11/7/2025	REVISED -	

STATE OF ILLINOIS
DEPARTMENT OF TRANSPORTATION

EXISTING DRAINAGE AND UTILITIES PLAN
I-80

SCALE: 1" = 50' | SHEET 2 OF 4 SHEETS | STA. | TO STA.

F.A.I. RTE.	SECTION	COUNTY	TOTAL SHEETS	SHEET NO.
80	FAI 80 21 STRUCTURE 2	WILL	1230	322
		CONTRACT NO. 62R23		
		ILLINOIS	FED. AID PROJECT	

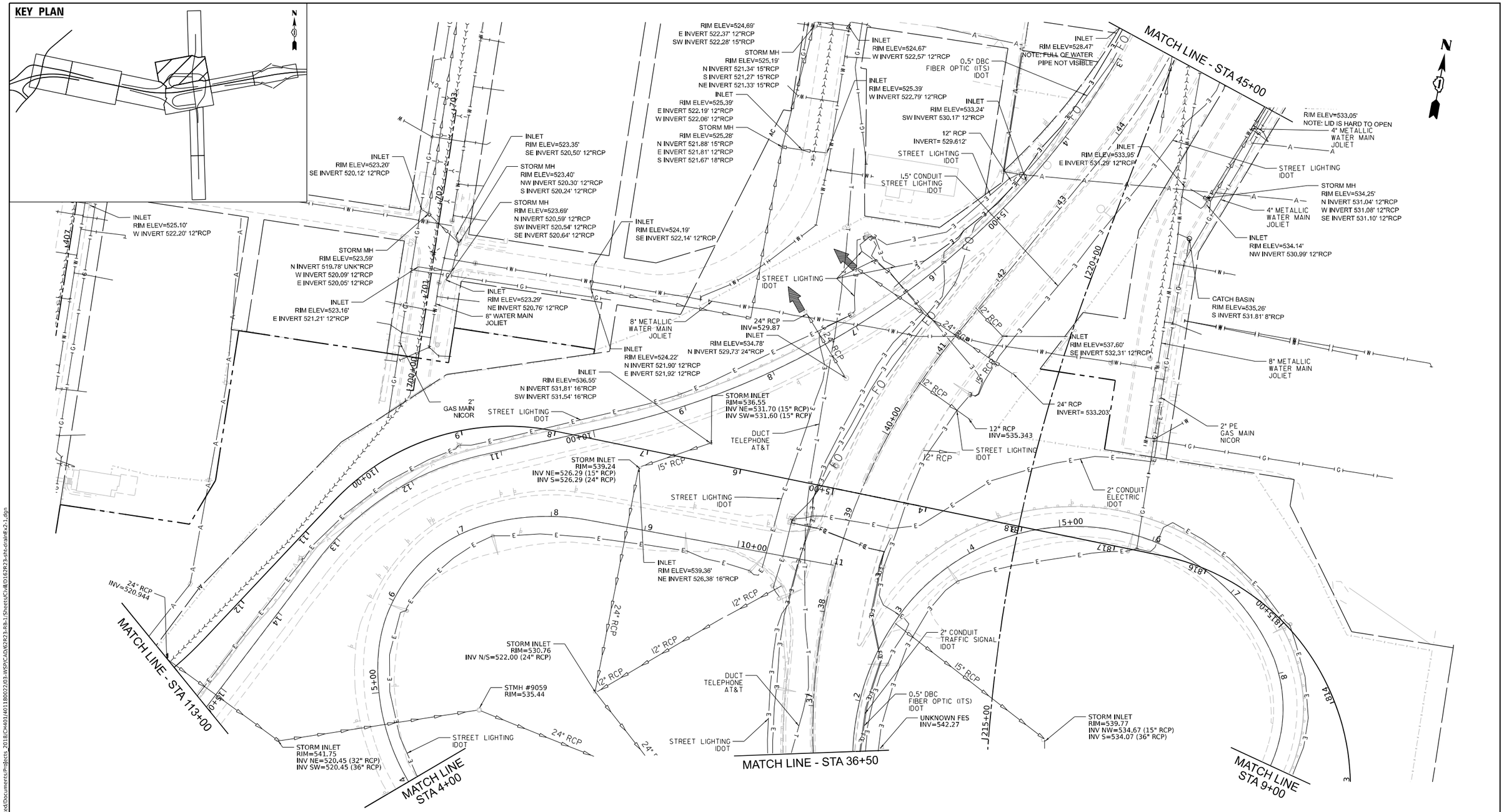

EXISTING DRAINAGE & UTILITY LEGEND

STORM SEWER		SANITARY SEWER	
WATER MAIN	W	AERIAL LINE	A
ELECTRIC	E	END SECTION	
GAS	G	MANHOLE (MH)	
FIBER OPTIC	FO	INLET	
		CATCH BASIN (CB)	

MODEL: Default
FILE NAME: pw://transystems-pw.bentley.com:transyscorp-pw1-hosted/Documents/Projects_2018/CH401/401180022/03-WSP/CAD/62R23-RB-1/Sheets/CwlID162R23-sht-drainE-2-1.dgn

WSP USA Inc.
30 N. LASALLE STREET
SUITE 4200
CHICAGO, IL 60602
TEL: (312) 782-8150

USER NAME = USHC706648	DESIGNED - SSM	REVISED -	
	DRAWN - CC	REVISED -	
PLOT SCALE = 100.000 ' / in.	CHECKED - HC	REVISED -	
PLOT DATE = 11/6/2025	DATE - 11/7/2025	REVISED -	

STATE OF ILLINOIS
DEPARTMENT OF TRANSPORTATION

EXISTING DRAINAGE AND UTILITIES PLAN
I-80

SCALE: 1" = 50' | SHEET 3 OF 4 SHEETS | STA. TO STA.

F.A.I. RTE.	SECTION	COUNTY	TOTAL SHEETS	SHEET NO.
80	FAI 80 21 STRUCTURE 2	WILL	1230	323
		CONTRACT NO. 62R23		
		ILLINOIS	FED. AID PROJECT	

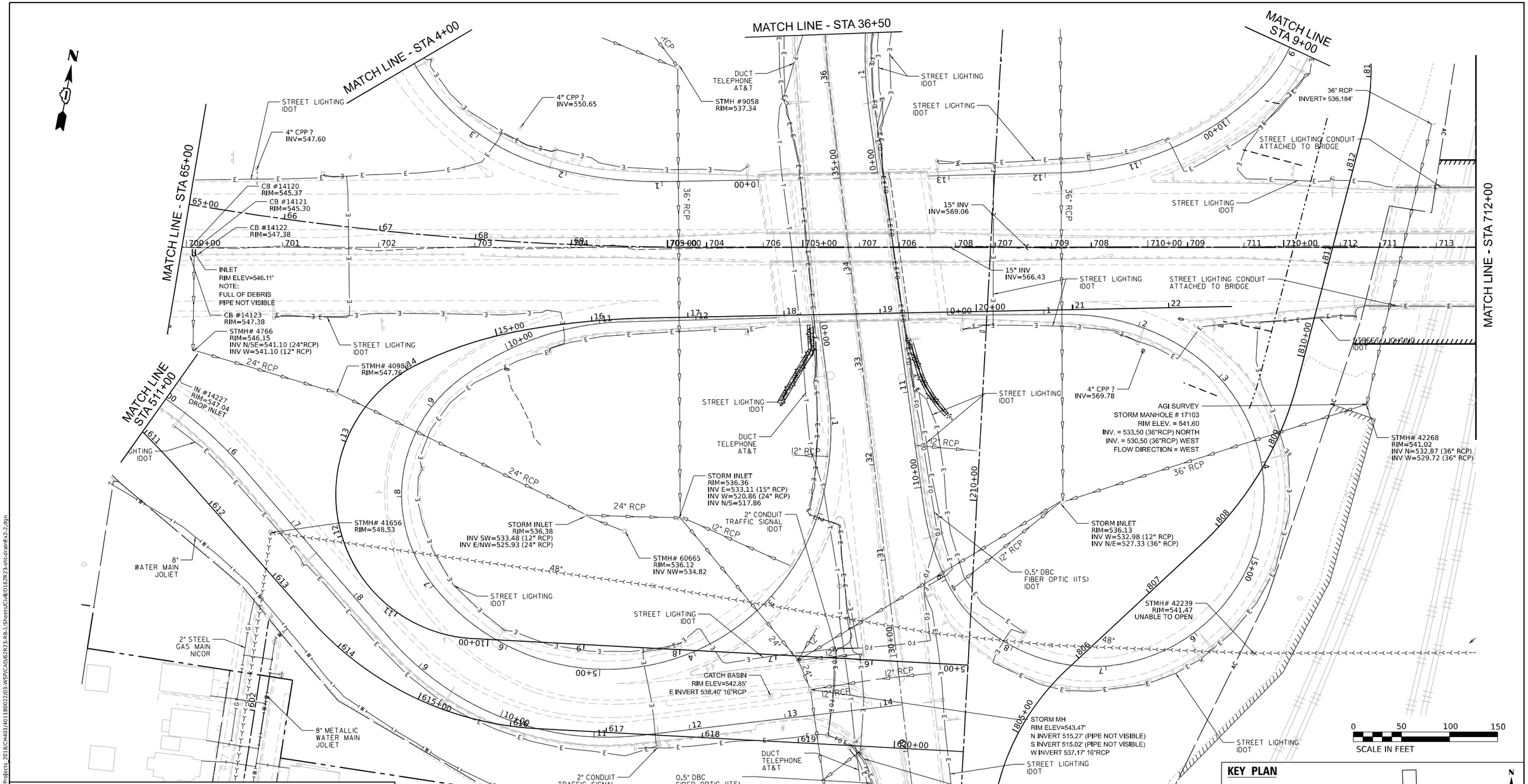

EXISTING DRAINAGE & UTILITY LEGEND

STORM SEWER		SANITARY SEWER	
WATER MAIN	W	AERIAL LINE	A
ELECTRIC	E	END SECTION	
GAS	G	MANHOLE (MH)	
FIBER OPTIC	FO	INLET	
		CATCH BASIN (CB)	

MODEL: Default
FILE NAME: pw://transystems-pw.bentley.com:transyscorp-pw1-hosted/Documents/Projects_2018/CH401/401180022/03-WSP/CAD/62R23-RB-1/Sheets/Civil/D162R23-sht-drainEx2-2.dgn

WSP USA Inc.
30 N. LASALLE STREET
SUITE 4200
CHICAGO, IL 60602
TEL: (312) 782-8150

USER NAME = USHC706648	DESIGNED - SSM	REVISED -
	DRAWN - CC	REVISED -
PLOT SCALE = 100.000 ' / in.	CHECKED - HC	REVISED -
PLOT DATE = 11/6/2025	DATE - 11/7/2025	REVISED -

STATE OF ILLINOIS
DEPARTMENT OF TRANSPORTATION

EXISTING DRAINAGE AND UTILITIES PLAN
I-80

SCALE: 1" = 50' | SHEET 4 OF 4 SHEETS | STA. | TO STA.

F.A.I. RTE.	SECTION	COUNTY	TOTAL SHEETS	SHEET NO.
80	FAI 80 21 STRUCTURE 2	WILL	1230	324
		CONTRACT NO. 62R23		
	ILLINOIS	FED. AID PROJECT		

SANITARY MH
NOT FOUND
IN THIS AREA

6"
WATER MAIN
JOLIET

UNKNOWN UTILITY
2" EMPTY CONDUITS

1.5" CONDUIT
FIBER OPTIC
IDOT

CSX RR

EXIST R.O.W.

BEGIN IMPROVEMENT
STA. 214+54.07

EXIST R.O.W.

US-6

℄ US-6

213

214

215+00

216

217

EXIST R.O.W.

MATCHLINE STA. 217+50.00

EXIST EB I-80

EXIST WB I-80

672

673

674

00+01

INLETS / END SECTIONS
NOT FOUND
IN THIS AREA

UNKNOWN MH
RIM ELEV=539.35'
NOTE: LID IS BOLTED

4" CONDUIT
GAS MAIN
NICOR

EXIST R.O.W.

N

0 20 40 60
SCALE IN FEET

KEY PLAN

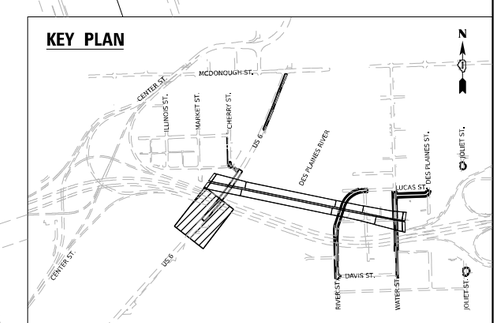

EXISTING DRAINAGE & UTILITY LEGEND

STORM SEWER	SANITARY SEWER
WATER MAIN	AERIAL LINE
ELECTRIC	END SECTION
GAS	MANHOLE (MH)
	INLET
FIBER OPTIC	CATCH BASIN (CB)

MODEL: Default
FILE NAME: pw://transystems-pw.bentley.com:transyscorp-pw1-hosted/Documents/Projects_2018/CH401/401180022/03-WSP/CAD/62R23-RB-1/Sheets/CivilD162R23-sht-drainEx11.dgn

WSP USA Inc.
30 N. LASALLE STREET
SUITE 4200
CHICAGO, IL 60602
TEL: (312) 782-8150

USER NAME = USHC706648	DESIGNED - SSM	REVISED -	
	DRAWN - CC	REVISED -	
PLOT SCALE = 40.000 ' / in.	CHECKED - HC	REVISED -	
PLOT DATE = 11/6/2025	DATE - 11/7/2025	REVISED -	

STATE OF ILLINOIS
DEPARTMENT OF TRANSPORTATION

EXISTING DRAINAGE AND UTILITY PLANS
US–6

SCALE: 1"=20' | SHEET 1 OF 12 SHEETS | STA. | TO STA.

F.A.I. RTE.	SECTION	COUNTY	TOTAL SHEETS	SHEET NO.
80	FAI 80 21 STRUCTURE 2	WILL	1230	325
		CONTRACT NO. 62R23		
		ILLINOIS	FED. AID PROJECT	

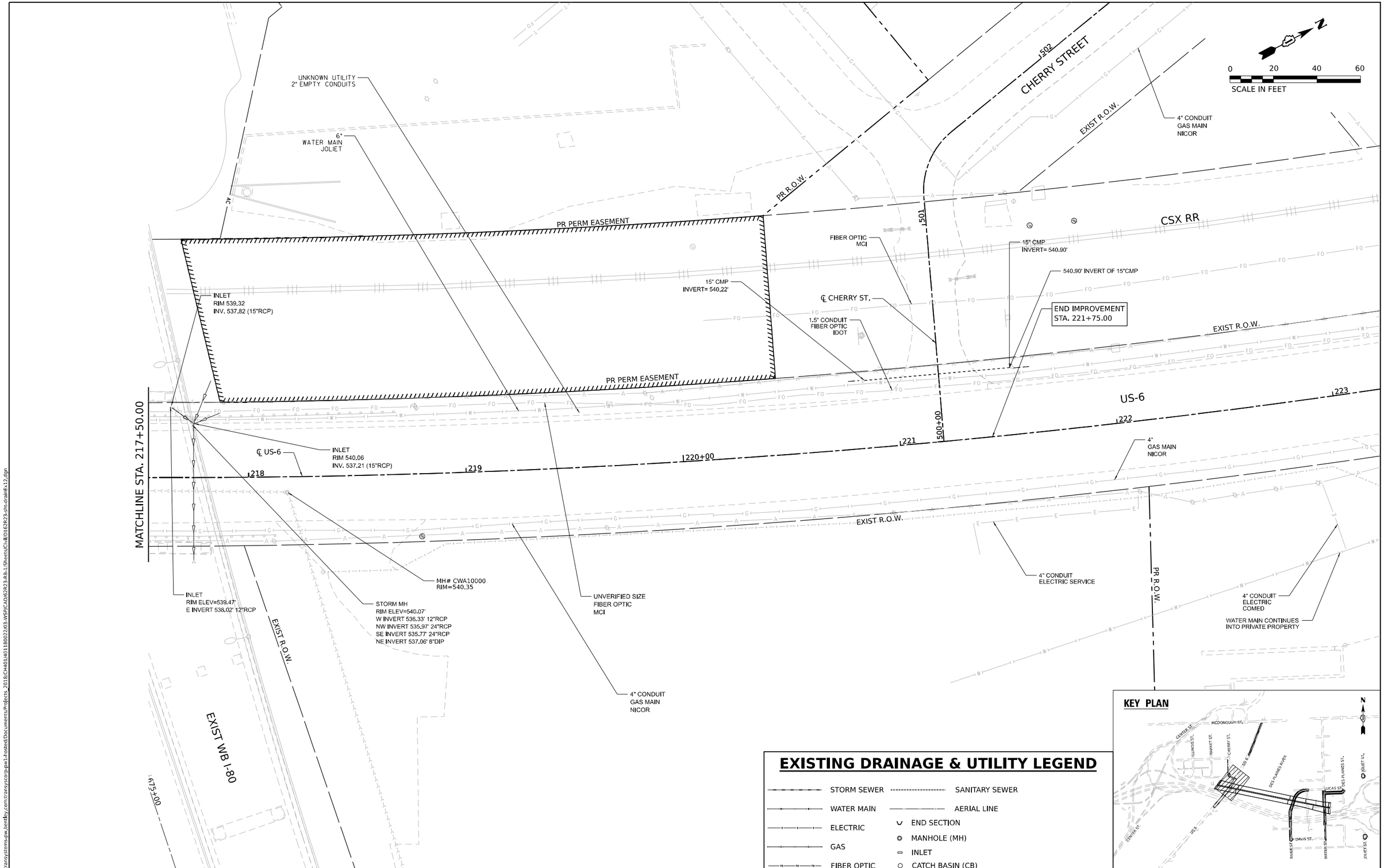

EXISTING DRAINAGE & UTILITY LEGEND

STORM SEWER	SANITARY SEWER
WATER MAIN	AERIAL LINE
ELECTRIC	END SECTION
GAS	MANHOLE (MH)
	INLET
FIBER OPTIC	CATCH BASIN (CB)

MODEL: Default
FILE NAME: pw://transystems-pw.bentley.com:transyscorp-pw1-hosted/Documents/Projects_2018/CH401/401180022/03-WSP/CAD/62R23-RB-1/Sheets/Civil/D162R23-sht-drainEx12.dgn

WSP USA Inc.
30 N. LASALLE STREET
SUITE 4200
CHICAGO, IL 60602
TEL: (312) 782-8150

USER NAME = USHC706648	DESIGNED - SSM	REVISED -	
	DRAWN - CC	REVISED -	
PLOT SCALE = 40.000 ' / in.	CHECKED - HC	REVISED -	
PLOT DATE = 11/6/2025	DATE - 11/7/2025	REVISED -	

STATE OF ILLINOIS
DEPARTMENT OF TRANSPORTATION

EXISTING DRAINAGE AND UTILITY PLANS
US–6

SCALE: 1"=20' | SHEET 2 OF 12 SHEETS | STA. | TO STA.

F.A.I. RTE.	SECTION	COUNTY	TOTAL SHEETS	SHEET NO.
80	FAI 80 21 STRUCTURE 2	WILL	1230	326
		CONTRACT NO. 62R23		
		ILLINOIS	FED. AID PROJECT	

0 20 40 60
SCALE IN FEET

STORM MH
RIM ELEV=543.88'
NW INVERT 538.89' 12"VCP
NOTE:
WATER LEVEL = 4.70'
NO OTHER VISIBLE PIPES

10" QLD
WATER MAIN
JOLIET

STORM MH
RIM ELEV=543.88'
S INVERT 538.98' 12"VCP
NW INVERT 538.87' 12"VCP

CSX RR

FIBER OPTIC
MCI

BEGIN PROJECT
STA. 216+36.00

EXIST R.O.W.

SANITARY MH
RIM ELEV=543.70'
NW INVERT 538.42' 12"VCP
E INVERT 538.15' 12"VCP

225+00
226
227
228
229
230+00

US-6

MATCHLINE STA. 230+50.00

EXIST R.O.W.

1.5" CONDUIT
FIBER OPTIC
AT&T

2"
GAS MAIN
NICOR

℄ US-6

10"
WATER MAIN

SANITARY MH
RIM ELEV=543.70'
E INVERT 538.20' 15"VCP
W INVERT 538.28' 18"VCP
NOTE:
WATER MAIN RUNS N-S DIRECTION
TOP OF PIPE (6"DIP) = 4.57'

10"
WATER MAIN
JOLIET

SANITARY MH
RIM ELEV=543.70'
E INVERT 538.20' 15"VCP
W INVERT 538.28' 18"VCP
NOTE:
WATER MAIN RUNS N-S DIRECTION
TOP OF PIPE (6"DIP) = 4.57'

1.5" CONDUIT
FIBER OPTIC
IDOT

10"
WATER MAIN
JOLIET

SANITARY MH
RIM ELEV=542.44'
SE INVERT 536.20' 15"PVC
W INVERT 536.24' 15"PVC

SANITARY MH
RIM ELEV=541.38'
E INVERT 535.01' 15"PVC
NW INVERT 535.16' 15"PVC

EXISTING DRAINAGE & UTILITY LEGEND

STORM SEWER		SANITARY SEWER	
WATER MAIN		AERIAL LINE	
ELECTRIC		END SECTION	
GAS		MANHOLE (MH)	
FIBER OPTIC		INLET	
		CATCH BASIN (CB)	

KEY PLAN

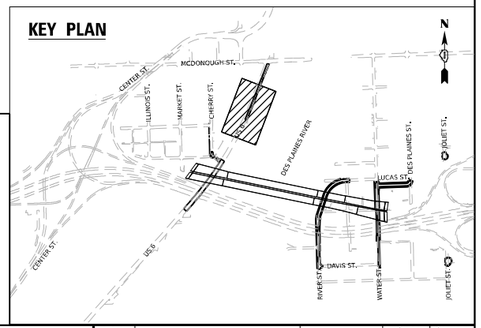

MODEL: Default
FILE NAME: pw://transystems-pw.bentley.com:transyscorp-pw1-hosted/Documents/Projects_2018/CH401/401180022/03-WSP/CAD/62R23-RB-1/Sheets/Civil/D62R23-sht-draftEx13.dgn

WSP USA Inc.
20 N. LASALLE STREET
SUITE 4200
CHICAGO, IL 60602
TEL: (312) 782-8150

USER NAME = USHC706648	DESIGNED - SSM	REVISED -	
	DRAWN - CC	REVISED -	
PLOT SCALE = 40.000 ' / in.	CHECKED - HC	REVISED -	
PLOT DATE = 11/6/2025	DATE - 11/7/2025	REVISED -	

STATE OF ILLINOIS
DEPARTMENT OF TRANSPORTATION

EXISTING DRAINAGE AND UTILITY PLANS
US–6

SCALE: 1"=20' | SHEET 3 OF 12 SHEETS | STA. | TO STA.

F.A.I. RTE.	SECTION	COUNTY	TOTAL SHEETS	SHEET NO.
80	FAI 80 21 STRUCTURE 2	WILL	1230	327
		CONTRACT NO. 62R23		
	ILLINOIS	FED. AID PROJECT		

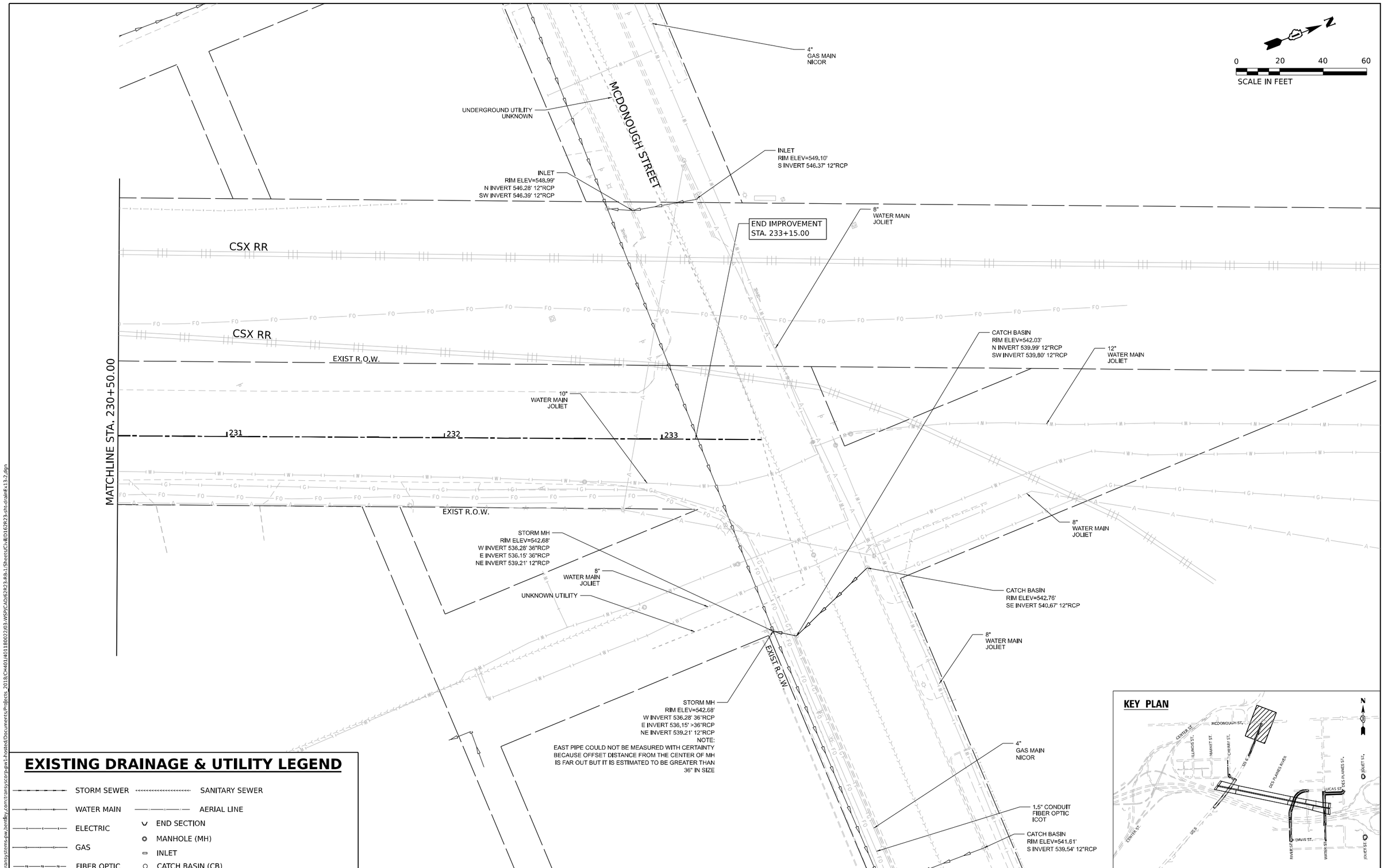

MODEL: Default
FILE NAME: pw://transystems-pw.bentley.com:transyscorp-pw1-hosted/Documents/Projects_2018/CH401/401180022/03-WSP/CAD/62R23-RB-1/Sheets/CivilD162R23-sht-drainEx13-2.dgn

WSP USA Inc.
30 N. LASALLE STREET
SUITE 4200
CHICAGO, IL 60602
TEL: (312) 782-8150

USER NAME = USHC706648	DESIGNED - SSM	REVISED -	
	DRAWN - CC	REVISED -	
PLOT SCALE = 40.000 ' / in.	CHECKED - HC	REVISED -	
PLOT DATE = 11/6/2025	DATE - 11/7/2025	REVISED -	

STATE OF ILLINOIS
DEPARTMENT OF TRANSPORTATION

EXISTING DRAINAGE AND UTILITY PLANS
US–6

SCALE: 1"=20' | SHEET 4 OF 12 SHEETS | STA. TO STA.

F.A.I. RTE.	SECTION	COUNTY	TOTAL SHEETS	SHEET NO.
80	FAI 80 21 STRUCTURE 2	WILL	1230	328
		CONTRACT NO. 62R23		
	ILLINOIS	FED. AID PROJECT		

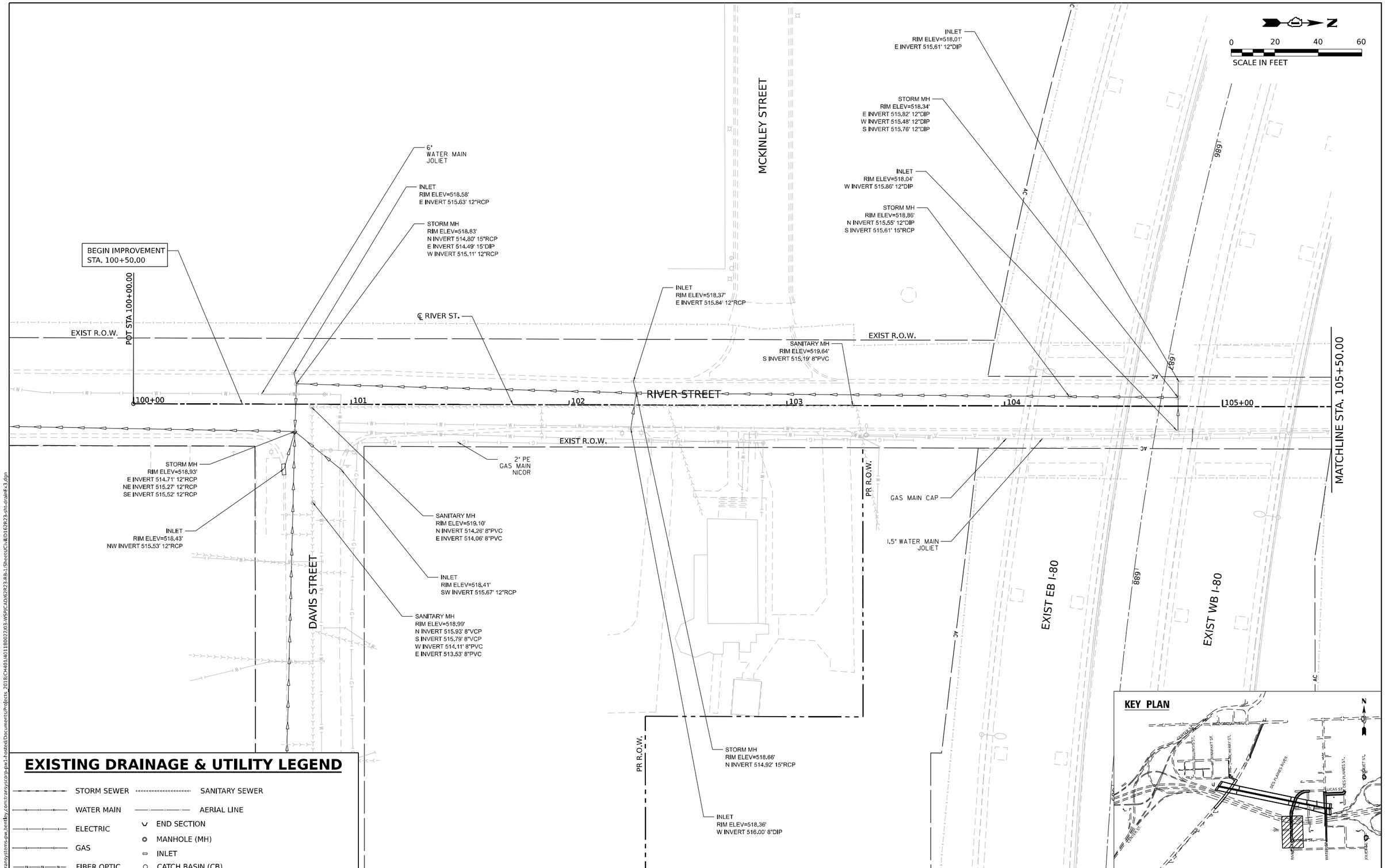

MODEL: Default
FILE NAME: pw://transystems-pw.bentley.com:transyscorp-pw1-hosted/Documents/Projects_2018/CH401/401180022/03-WSP/CAD/62R23-RB-1/Sheets/CivIl/D162R23-sht-drainEx3.dgn

WSP USA Inc.
30 N. LASALLE STREET
SUITE 4200
CHICAGO, IL 60602
TEL: (312) 782-8150

USER NAME = USHC706648	DESIGNED - SSM	REVISED -	
	DRAWN - CC	REVISED -	
PLOT SCALE = 40.000 ' / in.	CHECKED - HC	REVISED -	
PLOT DATE = 11/6/2025	DATE - 11/7/2025	REVISED -	

STATE OF ILLINOIS
DEPARTMENT OF TRANSPORTATION

EXISTING DRAINAGE AND UTILITY PLANS
RIVER STREET

SCALE: 1"=20' | SHEET 5 OF 12 SHEETS | STA. | TO STA.

F.A.I. RTE.	SECTION	COUNTY	TOTAL SHEETS	SHEET NO.
80	FAI 80 21 STRUCTURE 2	WILL	1230	329
		CONTRACT NO. 62R23		
		ILLINOIS	FED. AID PROJECT	

SANITARY MH
RIM ELEV=518.43'
W INVERT 506.93' 36"VCP
E INVERT 506.08' 36"RCP
S INVERT 506.03' 36"RCP

SANITARY MH
RIM ELEV=519.11'
W INVERT 505.86' 36"VCP
E INVERT 505.93' 36"VCP
E'LY INVERT 512.76' 8"VCP
NW INVERT 512.71' 8"VCP
SW INVERT 512.71' 8"VCP

SANITARY MH
RIM ELEV=517.41'
E INVERT 502.33' 48"RCP
SW INVERT 502.18' 48"RCP

SANITARY MH
RIM ELEV=518.48'
E INVERT 511.82' 12"VCP
N INVERT 514.58' 8"VCP
S INVERT 514.64' 8"VCP

0 20 40 60
SCALE IN FEET

INLET
RIM ELEV=517.89'
E INVERT 515.15' 12"RCP

GAS MAIN CAP

SANITARY MH
RIM ELEV=519.37'
N INVERT 502.17' 48"RCP
S INVERT 502.02' 48"RCP

PR R.O.W.

EXIST R.O.W.

INLET
RIM ELEV=517.65'
NE INVERT 515.49' 12"RCP

STORM MH
RIM ELEV=518.36'
E INVERT 515.34' 12"RCP
NW INVERT 515.39' 12"RCP
SW INVERT 515.42' 12"RCP

PT STA 106+62.40

PC STA 108+68.98

21" STEEL
GAS MAIN
NICOR

LUCAS STREET

PT STA 110+43.93

PC STA 105+75.88

PI STA 106+19.57

INLET
RIM ELEV=518.65'
NE INVERT 516.40' 12"RCP

STORM MH
RIM ELEV=518.96'
E INVERT 516.26' 12"RCP
NW INVERT 516.66' 12"RCP
SW INVERT 516.56' 12"RCP

SANITARY MH
RIM ELEV=519.09'
N INVERT 514.05' 8"VCP
S INVERT 514.00' 8"VCP
E INVERT 511.20' 12"VCP
W INVERT 511.32' 12"VCP
SW INVERT 513.31' 8"VCP

GAS MAIN CAP

6"
WATER MAIN
JOLIET

MATCHLINE STA. 105+50.00

RIVER STREET

107

108

109

110+00

INLET
RIM ELEV=518.65'
SE INVERT 516.40' 12"RCP

PR CURVE RIVER_PRCL
PI STA = 106+19.57
Δ = 19°49'46" (RT)
D = 22°55'06"
R = 250.00'
T = 43.70'
L = 86.52
E = 3.79'
e = ___
TR = ___
SE RUN = ___
PC STA = 105+75.88
PT STA = 106+62.40

℄ RIVER ST.

STORM MH
RIM ELEV=520.02'
N INVERT 514.42' 12"VCP
S INVERT 510.32' 12"VCP
E INVERT 511.22' 12"VCP
W INVERT 510.52' 12"VCP

SANITARY MH
RIM ELEV=519.84'
NOTE: PIPE IS OFFSET
(3.00' SOUTH)

SANITARY MH
RIM ELEV=519.48'
E INVERT 506.13' 36"VCP
W INVERT 506.08' 36"VCP
N INVERT 514.93' 8"VCP
S INVERT 515.03' 8"VCP
SE INVERT 513.53' 6"VCP

INLET
RIM ELEV=518.72'
E INVERT 514.27' 12"RCP

DUNCAN STREET

STORM MH
RIM ELEV=518.95'
N INVERT 514.15' 18"RCP
S INVERT 513.85' 15"RCP
E INVERT 514.35' 12"RCP
W INVERT 513.98' 12"RCP

111

EXIST R.O.W.

PR CURVE RIVER_PRCL
PI STA = 110+43.93
Δ = 69°58'03" (RT)
D = 22°55'06"
R = 250.00'
T = 174.95'
L = 305.29
E = 55.13'
e = ___
TR = ___
SE RUN = ___
PC STA = 108+68.98
PT STA = 111+74.27

6"
WATER MAIN
JOLIET

STORM MH
RIM ELEV=519.80'
S INVERT 513.50' 18"RCP
E INVERT 513.65' 18"RCP
W INVERT 514.50' 12"RCP

INLET
RIM ELEV=518.78'
W INVERT 514.45' 12"RCP

PT STA 1

4" STEEL
GAS MAIN
NICOR

SANITARY MH
RIM ELEV=519.66'
N INVERT 509.76' 12"VCP
S INVERT 509.71' 12"VCP
E INVERT 514.96' 12"VCP
W INVERT 514.98' 12"VCP

112

6"
WATER MAIN
JOLIET

2" STEEL
GAS MAIN
NICOR

KIEP AVENUE

PR R.O.

STORM MH
RIM ELEV=519.85'
E INVERT 513.70' 15"RCP
W INVERT 513.75' 18"RCP

KEY PLAN

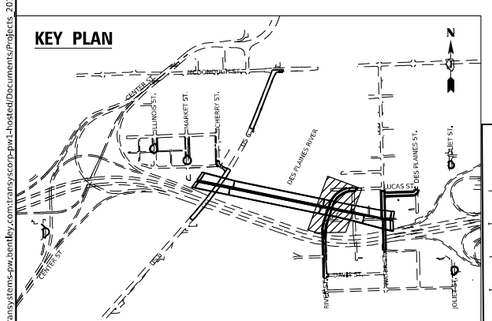

EXISTING DRAINAGE & UTILITY LEGEND

STORM SEWER	SANITARY SEWER
WATER MAIN	AERIAL LINE
ELECTRIC	END SECTION
GAS	MANHOLE (MH)
	INLET
FIBER OPTIC	CATCH BASIN (CB)

MODEL: Default
FILE NAME: pw://transystems-pw.bentley.com:transyscorp-pw1-hosted/Documents/Projects_2018/C-4401/4011800221/03-WSP/CAD/62R23-Rb-1/Sheets/Civil/D162R23-sht-craintEx4.dgn

WSP USA Inc.
30 N. LASALLE STREET
SUITE 4200
CHICAGO, IL 60602
TEL: (312) 782-8150

USER NAME = USHC706648	DESIGNED - SSM	REVISED -	
	DRAWN - CC	REVISED -	
PLOT SCALE = 40.000 ' / in.	CHECKED - HC	REVISED -	
PLOT DATE = 11/6/2025	DATE - 11/7/2025	REVISED -	

STATE OF ILLINOIS
DEPARTMENT OF TRANSPORTATION

EXISTING DRAINAGE AND UTILITY PLAN
RIVER STREET

SCALE: 1"=20' | SHEET 6 OF 12 SHEETS | STA. | TO STA.

F.A.I. RTE.	SECTION	COUNTY	TOTAL SHEETS	SHEET NO.
80	FAI 80 21 STRUCTURE 2	WILL	1230	330

CONTRACT NO. 62R23

ILLINOIS | FED. AID PROJECT

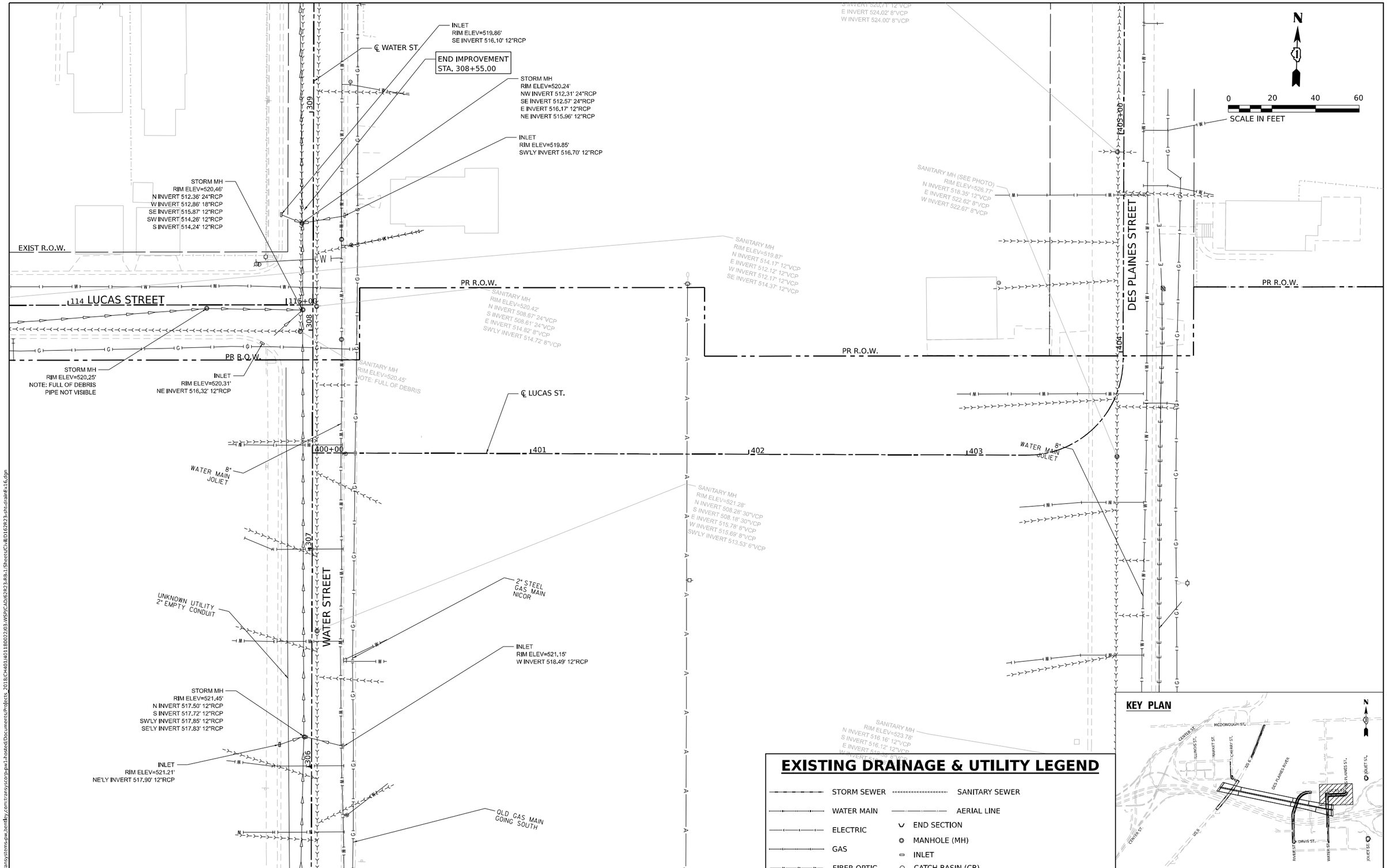

MODEL: Default
FILE NAME: pw://transystems-pw.bentley.com:transyscorp-pw1-hosted/Documents/Projects_2018/CH401/401180022/03-WSP/CAD/62R23-RB-1/Sheets/Civil/D162R23-sht-drainEx16.dgn

WSP USA Inc.
30 N. LASALLE STREET
SUITE 4200
CHICAGO, IL 60602
TEL: (312) 782-8150

USER NAME = USHC706648	DESIGNED - SSM	REVISED -	
	DRAWN - CC	REVISED -	
PLOT SCALE = 40.000 ' / in.	CHECKED - HC	REVISED -	
PLOT DATE = 11/6/2025	DATE - 11/7/2025	REVISED -	

STATE OF ILLINOIS
DEPARTMENT OF TRANSPORTATION

EXISTING DRAINAGE AND UTILITY PLANS
LUCAS STREET

SCALE: 1"=20' | SHEET 7 OF 12 SHEETS | STA. TO STA.

F.A.I. RTE.	SECTION	COUNTY	TOTAL SHEETS	SHEET NO.
80	FAI 80 21 STRUCTURE 2	WILL	1230	331
		CONTRACT NO. 62R23		
		ILLINOIS	FED. AID PROJECT	

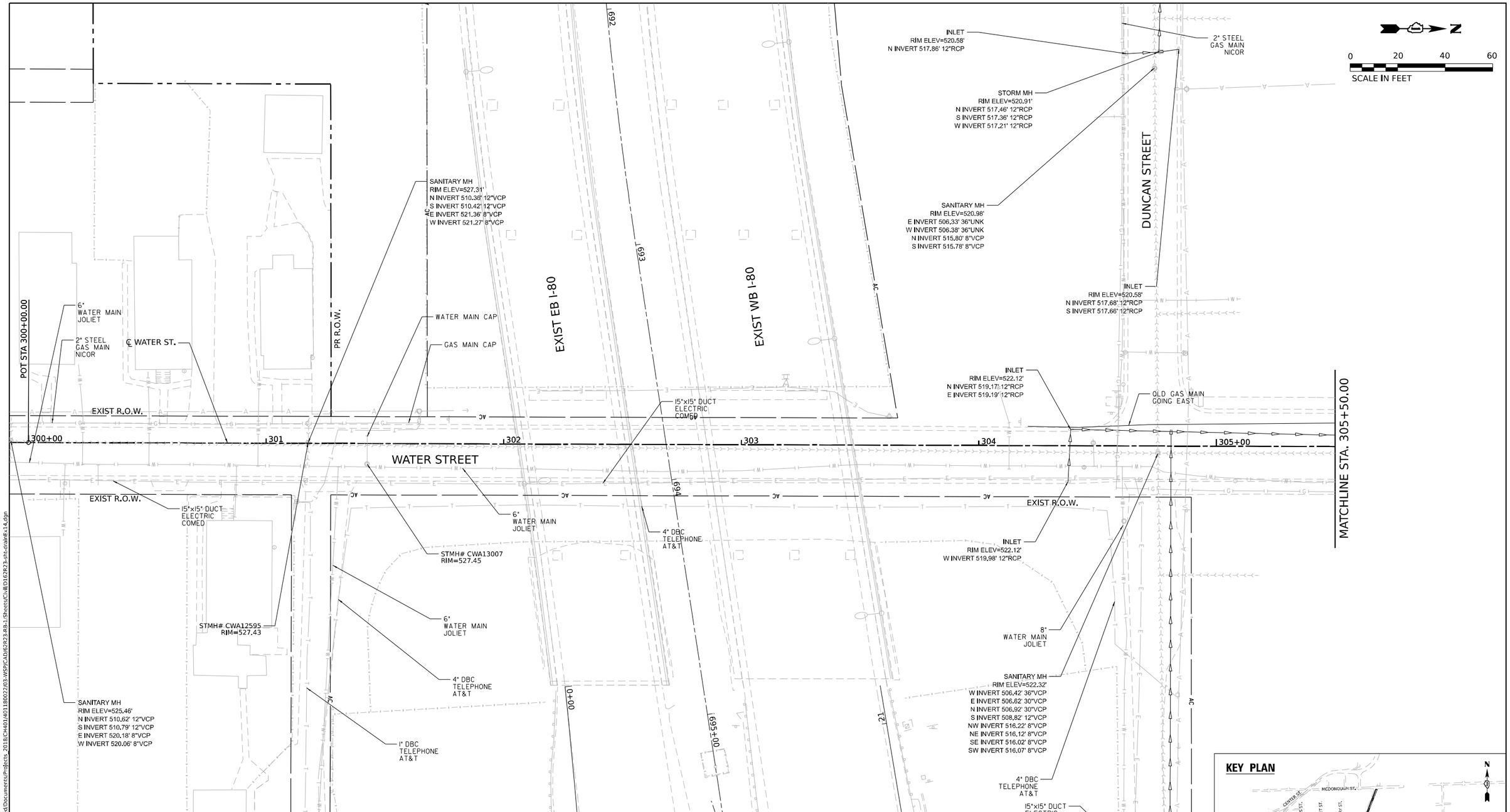

EXISTING DRAINAGE & UTILITY LEGEND

STORM SEWER	SANITARY SEWER
WATER MAIN	AERIAL LINE
ELECTRIC	END SECTION
GAS	MANHOLE (MH)
FIBER OPTIC	INLET
	CATCH BASIN (CB)

MODEL: Default
FILE NAME: pw://transystems-pw.bentley.com:transyscorp-pw1-hosted/Documents/Projects_2018/CH401/401180022/03-WSP/CAD/62R23-RB-1/Sheets/Civil/D162R23-sht-drainE14.dgn

WSP USA Inc.
30 N. LASALLE STREET
SUITE 4200
CHICAGO, IL 60602
TEL: (312) 782-8150

USER NAME = USHC706648	DESIGNED - SSM	REVISED -	
	DRAWN - CC	REVISED -	
PLOT SCALE = 40.000 ' / in.	CHECKED - HC	REVISED -	
PLOT DATE = 11/6/2025	DATE - 11/7/2025	REVISED -	

STATE OF ILLINOIS
DEPARTMENT OF TRANSPORTATION

EXISTING DRAINAGE AND UTILITY PLANS
WATER STREET

SCALE: 1"=20' | SHEET 8 OF 12 SHEETS | STA. TO STA.

F.A.I. RTE.	SECTION	COUNTY	TOTAL SHEETS	SHEET NO.
80	FAI 80 21 STRUCTURE 2	WILL	1230	332
		CONTRACT NO. 62R23		
		ILLINOIS	FED. AID PROJECT	

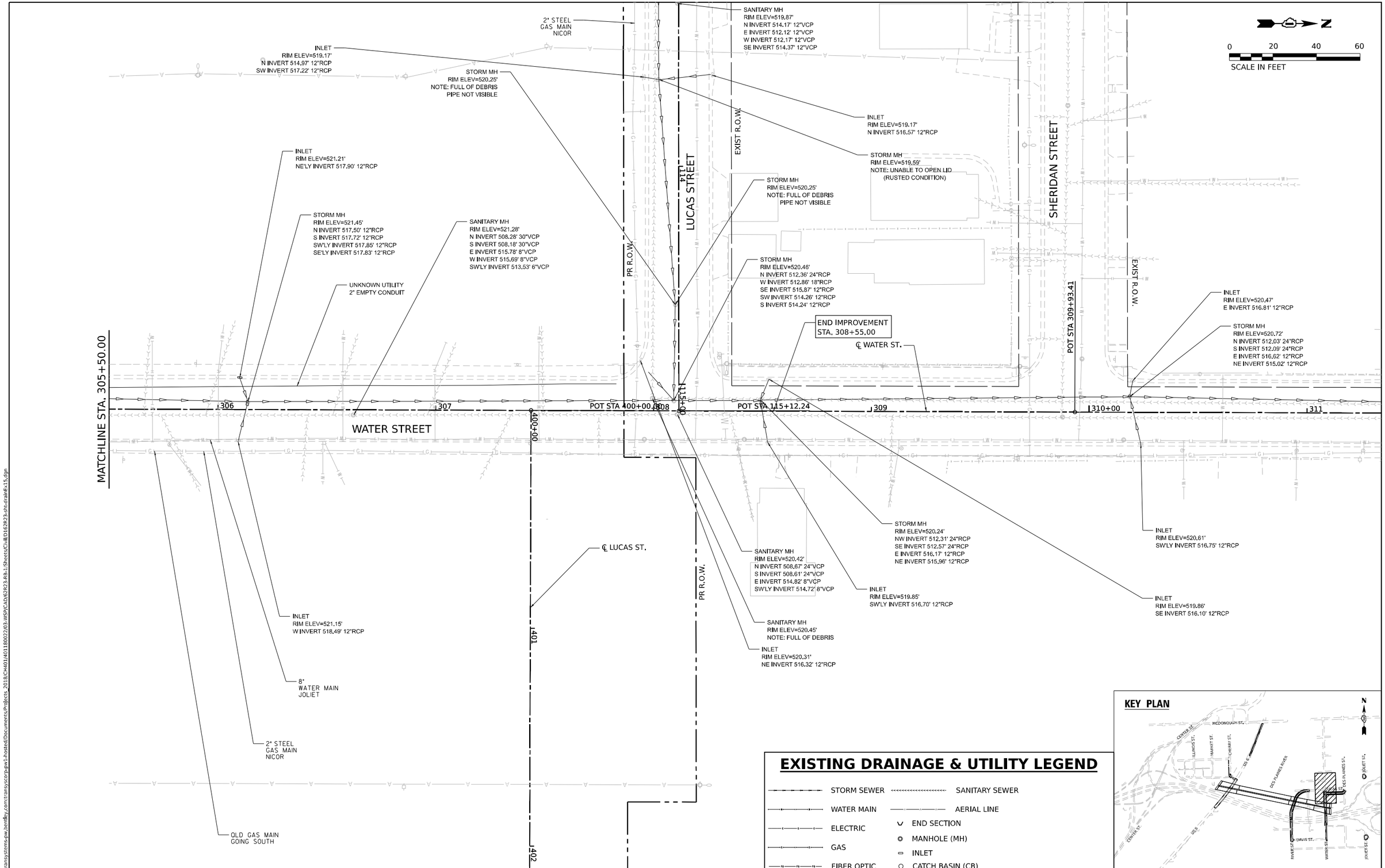

EXISTING DRAINAGE & UTILITY LEGEND

- STORM SEWER
- SANITARY SEWER
- WATER MAIN
- AERIAL LINE
- ELECTRIC
- END SECTION
- MANHOLE (MH)
- GAS
- INLET
- FIBER OPTIC
- CATCH BASIN (CB)

KEY PLAN

MODEL: Default
FILE NAME: pw://transystems-pw.bentley.com:transyscorp-pw1-hosted/Documents/Projects_2018/CH401/401180022/03-WSP/CAD/62R23-RB-1/Sheets/Civil/D62R23-sht-draftEx15.dgn

WSP USA Inc.
20 N. LASALLE STREET
SUITE 4200
CHICAGO, IL 60602
TEL: (312) 782-8150

USER NAME = USHC706648	DESIGNED - SSM	REVISED -	
	DRAWN - CC	REVISED -	
PLOT SCALE = 40.000 ' / in.	CHECKED - HC	REVISED -	
PLOT DATE = 11/6/2025	DATE - 11/7/2025	REVISED -	

STATE OF ILLINOIS
DEPARTMENT OF TRANSPORTATION

EXISTING DRAINAGE AND UTILITY PLANS
WATER STREET

SCALE: 1"=20' | SHEET 9 OF 12 SHEETS | STA. | TO STA.

F.A.I. RTE.	SECTION	COUNTY	TOTAL SHEETS	SHEET NO.
80	FAI 80 21 STRUCTURE 2	WILL	1230	333
		CONTRACT NO. 62R23		
	ILLINOIS	FED. AID PROJECT		

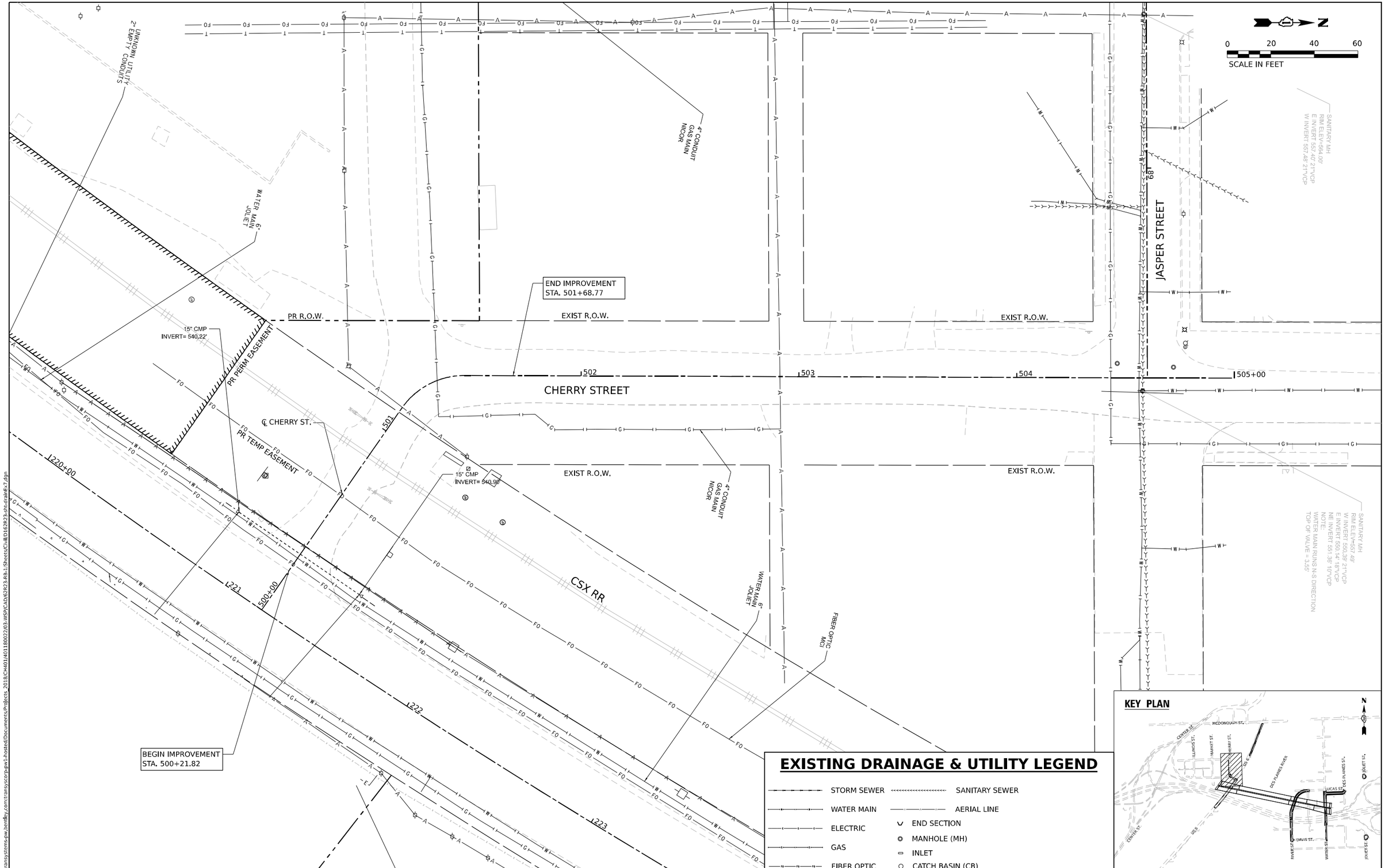

MODEL: Default
FILE NAME: pw://transystems-pw.bentley.com:transyscorp-pw1-hosted/Documents/Projects_2018/CH401/401180022/03-WSP/CAD/62R23-RB-1/Sheets/CivilD162R23-sht-drainEx7.dgn

WSP USA Inc.
20 N. LASALLE STREET
SUITE 4200
CHICAGO, IL 60602
TEL: (312) 782-8150

USER NAME = USHC706648	DESIGNED - SSM	REVISED -	
	DRAWN - CC	REVISED -	
PLOT SCALE = 40.000 ' / in.	CHECKED - HC	REVISED -	
PLOT DATE = 11/6/2025	DATE - 11/7/2025	REVISED -	

STATE OF ILLINOIS
DEPARTMENT OF TRANSPORTATION

EXISTING DRAINAGE AND UTILITY PLAN
CHERRY STREET

SCALE: 1"=20' | SHEET 10 OF 12 SHEETS | STA. | TO STA.

F.A.I. RTE.	SECTION	COUNTY	TOTAL SHEETS	SHEET NO.
80	FAI 80 21 STRUCTURE 2	WILL	1230	334
		CONTRACT NO. 62R23		
	ILLINOIS	FED. AID PROJECT		

SANITARY MH
RIM ELEV=522.18'
W INVERT 514.23' 15"VCP
E INVERT 514.02' 15"VCP
N INVERT 517.61' 8"VCP
S INVERT 517.43' 8"VCP

0 20 40 60
SCALE IN FEET

STREET LIGHTING
IDOT

6"
WATER MAIN
JOLIET

6" WATER MAIN
JOLIET

PR R.O.W.

2" STEEL
GAS MAIN
NICOR

SOUTH STREET

EXIST R.O.W.

STMH# 41656
RIM=548.53

600+00

601

602

S JOLIET STREET

SANITARY MH
RIM ELEV=548.42'

NOTE:
PIPES ARE NOT VISIBLE
WATER LEVEL=38.37'

EXIST R.O.W.

PR R.O.W.

PR R.O.W.

SANITARY MH
RIM ELEV=523.85'
N INVERT 506.75' 48"UNK
S INVERT 506.67' 48"UNK
NOTE:
WEST PIPE IS NOT VISIBLE

KEY PLAN

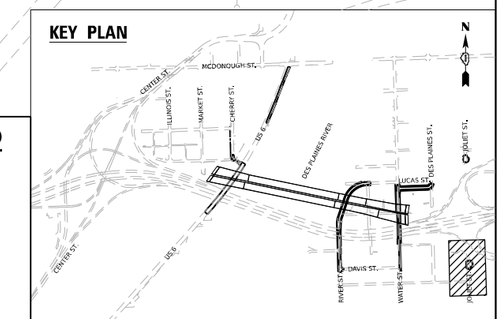

EXISTING DRAINAGE & UTILITY LEGEND

STORM SEWER	SANITARY SEWER
WATER MAIN	AERIAL LINE
ELECTRIC	END SECTION
GAS	MANHOLE (MH)
	INLET
FIBER OPTIC	CATCH BASIN (CB)

MODEL: Default
FILE NAME: pw://transystems-pw.bentley.com:transyscorp-pw1-hosted/Documents/Projects - 2018/CH401/401180022/03-WSP/CAD/62R23-RB-1/Sheets/CH401D162R23-sht-drainEx5.dgn

WSP USA Inc.
30 N. LASALLE STREET
SUITE 4200
CHICAGO, IL 60602
TEL: (312) 782-8150

USER NAME = USHC706648	DESIGNED - SSM	REVISED -	
	DRAWN - CC	REVISED -	
PLOT SCALE = 40.000 ' / in.	CHECKED - HC	REVISED -	
PLOT DATE = 11/6/2025	DATE - 11/7/2025	REVISED -	

STATE OF ILLINOIS
DEPARTMENT OF TRANSPORTATION

EXISTING DRAINAGE AND UTILITY PLAN
JOLIET STREET – SOUTH

SCALE: 1"=20' | SHEET 11 OF 12 SHEETS | STA. TO STA.

F.A.I. RTE.	SECTION	COUNTY	TOTAL SHEETS	SHEET NO.
80	FAI 80 21 STRUCTURE 2	WILL	1230	335
		CONTRACT NO. 62R23		
		ILLINOIS	FED. AID PROJECT	

0 20 40 60
SCALE IN FEET

SANITARY MH
RIM ELEV=532.38'
NE INVERT 510.38' 24"RCP
SW INVERT 510.28' 36"RCP

INLET
RIM ELEV=523.16'
E INVERT 521.21' 12"RCP

PR R.O.W.

EXIST R.O.W.

SHELBY STREET

STORM MH
RIM ELEV=523.59'
N INVERT 519.78' UNK"RCP
W INVERT 520.09' 12"RCP
E INVERT 520.05' 12"RCP

INLET
RIM ELEV=523.20'
SE INVERT 520.12' 12"RCP

2" GAS MAIN
NICOR

S JOLIET STREET

700+00 701 702 703

SANITARY MH
RIM ELEV=523.94'
N INVERT 510.81' 20"VCP
SW INVERT 510.74' 20"VCP

SANITARY MH
RIM ELEV=523.83'
N INVERT 511.02' 21"RCP
S INVERT 510.93' 21"RCP
NW INVERT 519.28' 8"VCP
NE INVERT 519.15' 8"VCP
SE INVERT 519.83' 8"VCP

INLET
RIM ELEV=523.35'
SE INVERT 520.50' 12"RCP

STORM MH
RIM ELEV=523.40'
NW INVERT 520.30' 12"RCP
S INVERT 520.24' 12"RCP

INLET
RIM ELEV=523.29'
NE INVERT 520.76' 12"RCP

STORM MH
RIM ELEV=523.69'
N INVERT 520.59' 12"RCP
SW INVERT 520.54' 12"RCP
SE INVERT 520.64' 12"RCP

INLET
RIM ELEV=524.22'
N INVERT 521.90' 12"RCP
E INVERT 521.92' 12"RCP

INLET
RIM ELEV=524.19'
SE INVERT 522.14' 12"RCP

EXISTING DRAINAGE & UTILITY LEGEND

- STORM SEWER
- SANITARY SEWER
- WATER MAIN
- AERIAL LINE
- ELECTRIC
- END SECTION
- MANHOLE (MH)
- GAS
- INLET
- FIBER OPTIC
- CATCH BASIN (CB)

KEY PLAN

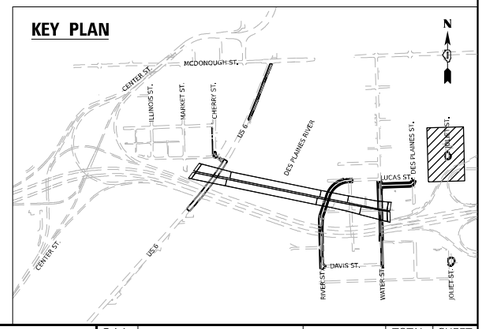

MODEL: Default
FILE NAME: pw://transystems-pw.bentley.com:transyscorp-pw1-hosted/Documents/Projects_2018/CH401/401180022/03-WSP/CAD/62R23-RB-1/Sheets/CivilD162R23-sht-craftEx6.dgn

WSP USA Inc.
20 N. LASALLE STREET
SUITE 4200
CHICAGO, IL 60602
TEL: (312) 782-8150

USER NAME = USHC706648	DESIGNED - SSM	REVISED -	
	DRAWN - CC	REVISED -	
PLOT SCALE = 40.000 ' / in.	CHECKED - HC	REVISED -	
PLOT DATE = 11/6/2025	DATE - 11/7/2025	REVISED -	

STATE OF ILLINOIS
DEPARTMENT OF TRANSPORTATION

EXISTING DRAINAGE AND UTILITY PLAN
JOLIET STREET – NORTH

SCALE: 1"=20' | SHEET 12 OF 12 SHEETS | STA. TO STA.

F.A.I. RTE.	SECTION	COUNTY	TOTAL SHEETS	SHEET NO.
80	FAI 80 21 STRUCTURE 2	WILL	1230	336
		CONTRACT NO. 62R23		
	ILLINOIS	FED. AID PROJECT		

LEGEND

PR. INLET	PR. DRAINAGE SCUPPER
PR. CATCH BASIN	PR. STORM SEWER
PR. MANHOLE	PR. RIP RAP APRON
PR. UNDERDRAIN HEADWALL	PR. STRUCTURE
PR. END SECTION	PR. PIPE
PR. SWALE	UTILITY CROSSING
PR. DITCH	

MARKET ST.
CHERRY ST.
CSX RAILROAD
US 6/ RAILROAD ST.
DES PLAINES RIVER
RAMP C
WB I-80
EB I-80
EXIST WB I-80
EXIST EB I-80
MATCHLINE STA. 51+00.00

DRAINAGE NETWORK CONSTRCTED IN CONTRACT 62R22
℄ MARKET ST.
℄ CHERRY ST.
PR R.O.W.
CONNECT TO STRUCTURE CONSTRUCTED IN CONTRACT 62R22
I-80 WB OVER DES PLAINES RIVER APPROACH SLAB
PR PERM EASEMENT
SEE US-6 PROPOSED DRAINAGE PLANS
℄ CENTER RAMP C
100-YR FLOODWAY BOUNDARY, FEMA ZONE AE (DES PLAINES RIVER)
1' STUB
℄ CENTER RAMP C STA. 0+00.00=
℄ I-80 STA. 43+21.69, 70.00' LT.
I-80 WB OVER DES PLAINES RIVER SN 099-8309
EX 3820
EX 3776
BEGIN PROJECT STA. 37+89.00
℄ CENTER RAMP B STA. 21+04.74=
℄ I-80 STA. 39+16.66, 69.00' RT.
SEE STRUCTURAL PLANS FOR BRIDGE DECK DRAINAGE
I-80 WB PGL
℄ I-80
CONNECT TO STRUCTURE CONSTRUCTED IN 62R22
EX 3775
I-80 EB PGL
EX 3742
℄ CENTER RAMP B
I-80 EB OVER DES PLAINES RIVER APPROACH SLAB
EXIST R.O.W.
I-80 EB OVER DES PLAINES RIVER SN 099-8325
EXIST I-80 WB OVER DES PLAINES RIVER SN 099-0057
100-YR FLOODWAY BOUNDARY, FEMA ZONE AE (DES PLAINES RIVER)
APPROX ZONE AE 100-YR FLOODPLAIN BOUNDARY (JOLIET FLOW MAIN DRAIN), BFE = 524.5'
MATCHLINE
SEE CONTRACT NO. 62R22
℄ US-6
EXIST I-80 EB OVER DES PLAINES RIVER SN 099-0056
100-YR FLOODWAY BOUNDARY, FEMA ZONE AE (DES PLAINES RIVER)

EX-3820
STA 38+20, 103'LT
CB TA 4 DIA T20F&G
RIM = 595.96
EX INV. = 589.91 S
INV. = 589.91 E

EX-3776
STA 37+75, 9.5' LT
MAN TA 6 DIA T20F&G
RIM = 594.50
EX INV. = 588.46 N
EX INV. = 588.36 S
INV = 588.50 E

EX-3775
STA 37+75, 9.0'RT
MAN TA 7 DIA T20F&G
RIM = 594.53
EX INV. = 588.08 N
EX INV. = 585.00 S
INV. = 588.50 E
EX INV. = 582.97 W

EX-3742
STA 37+42, 81.1' RT
CB TA 4 DIA T20F&G
RIM = 592.61
EX INV. = 586.49 N
INV. = 586.49 E

KEY PLAN

N

0 50 100 150
SCALE IN FEET

MODEL: Default
FILE NAME: pw://transystems-pw.bentley.com:transyscorp-pw1-hosted/Documents/Projects_2018/C-M401/M401180022/03-WSP/CAD/62R23-Rb-1/Sheets/CivilD162R23-ch-drainplan1.dgn

WSP USA Inc.
30 N. LASALLE STREET
SUITE 4200
CHICAGO, IL 60602
TEL: (312) 782-8150

USER NAME = USHC706648	AKG	DESIGNED - DB	REVISED -	STATE OF ILLINOIS DEPARTMENT OF TRANSPORTATION	PROPOSED DRAINAGE AND UTILITY PLAN I–80	F.A.I. RTE.	SECTION
	SSM	DRAWN - HC	REVISED -			80	FAI 80 21 STRUCTURE 2
PLOT SCALE = 100.000 ' / in.	KS	CHECKED - KS	REVISED -				
PLOT DATE = 11/6/2025		DATE - 11/7/2025	REVISED -		SCALE: 1" = 50' SHEET 1 OF 4 SHEETS STA. TO STA.		

COUNTY	TOTAL SHEETS	SHEET NO.
WILL	1230	337
CONTRACT NO. 62R23		
ILLINOIS	FED. AID PROJECT	

LEGEND

- PR. INLET
- PR. CATCH BASIN
- PR. UNDERDRAIN HEADWALL
- PR. END SECTION
- PR. DRAINAGE SCUPPER
- PR. SWALE
- PR. MANHOLE
- PR. STORM SEWER
- PR. PIPE UNDERDRAIN
- PR. RIP RAP APRON
- XXXX PR. STRUCTURE
- XXXX PR. PIPE
- PR. DITCH
- UC UTILITY CROSSING

NOTES:

1. FOR PIPE UNDERDRAIN DETAILS AND SCHEDULE, SEE SHEET 385
2. FOR PLACEMENT OF DRAINAGE STRUCTURE, SEE SHEET383
3. FOR RIPRAP DETAILS, SEE SHEET 384
4. UC: PROPOSED STORM SEWER CROSSING OVER PROPOSED CITY OF JOLIET UTILITIES; REFER TO JOLIET DRAINAGE AND UTILITY PLANS

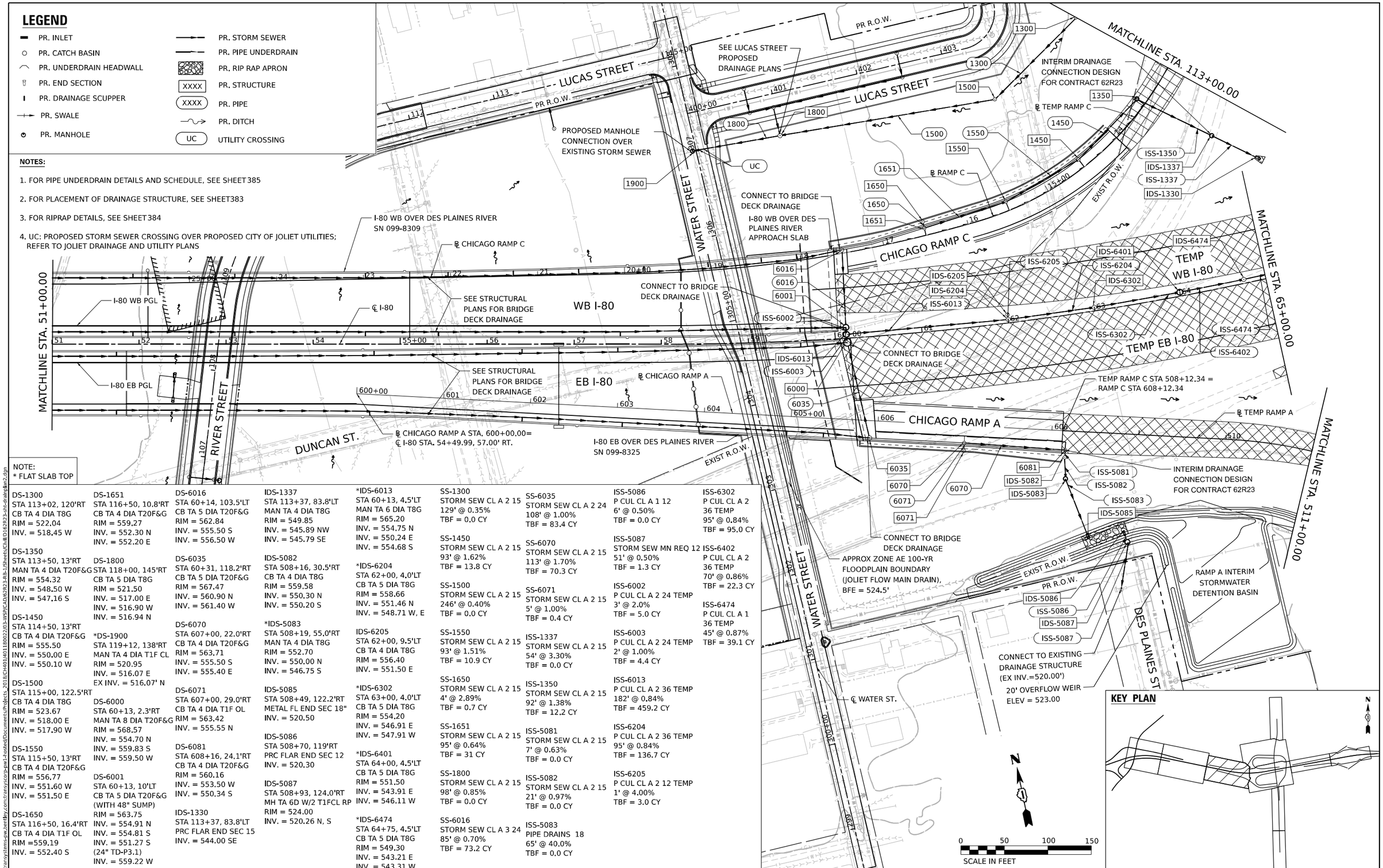

NOTE:
* FLAT SLAB TOP

DS-1300
STA 113+02, 120'RT
CB TA 4 DIA T8G
RIM = 522.04
INV. = 518.45 W

DS-1350
STA 113+50, 13'RT
MAN TA 4 DIA T20F&G
RIM = 554.32
INV. = 548.50 W
INV. = 547.16 S

DS-1450
STA 114+50, 13'RT
CB TA 4 DIA T20F&G
RIM = 555.50
INV. = 550.00 E
INV. = 550.10 W

DS-1500
STA 115+00, 122.5'RT
CB TA 4 DIA T8G
RIM = 523.67
INV. = 518.00 E
INV. = 517.90 W

DS-1550
STA 115+50, 13'RT
CB TA 4 DIA T20F&G
RIM = 556.77
INV. = 551.60 W
INV. = 551.50 E

DS-1650
STA 116+50, 16.4'RT
CB TA 4 DIA T1F OL
RIM =559.19
INV. = 552.40 S

DS-1651
STA 116+50, 10.8'RT
CB TA 4 DIA T20F&G
RIM = 559.27
INV. = 552.30 N
INV. = 552.20 E

DS-1800
STA 118+00, 145'RT
CB TA 5 DIA T8G
RIM = 521.50
INV. = 517.00 E
INV. = 516.90 W
INV. = 516.94 N

*DS-1900
STA 119+12, 138'RT
MAN TA 4 DIA T1F CL
RIM = 520.95
INV. = 516.07 E
EX INV. = 516.07' N

DS-6000
STA 60+13, 2.3'RT
MAN TA 8 DIA T20F&G
RIM = 568.57
INV. = 554.70 N
INV. = 559.83 S
INV. = 559.50 W

DS-6001
STA 60+13, 10'LT
CB TA 5 DIA T20F&G
(WITH 48" SUMP)
RIM = 563.75
INV. = 554.91 N
INV. = 554.81 S
INV. = 551.27 S
(24" TD-P3.1)
INV. = 559.22 W

DS-6016
STA 60+14, 103.5'LT
CB TA 5 DIA T20F&G
RIM = 562.84
INV. = 555.50 S
INV. = 556.50 W

DS-6035
STA 60+31, 118.2'RT
CB TA 5 DIA T20F&G
RIM = 567.47
INV. = 560.90 N
INV. = 561.40 W

DS-6070
STA 607+00, 22.0'RT
CB TA 4 DIA T20F&G
RIM = 563.71
INV. = 555.50 S
INV. = 555.40 E

DS-6071
STA 607+00, 29.0'RT
CB TA 4 DIA T1F OL
RIM = 563.42
INV. = 555.55 N

DS-6081
STA 608+16, 24.1'RT
CB TA 4 DIA T20F&G
RIM = 560.16
INV. = 553.50 W
INV. = 550.34 S

IDS-1330
STA 113+37, 83.8'LT
PRC FLAR END SEC 15
INV. = 544.00 SE

IDS-1337
STA 113+37, 83.8'LT
MAN TA 4 DIA T8G
RIM = 549.85
INV. = 545.89 NW
INV. = 545.79 SE

IDS-5082
STA 508+16, 30.5'RT
CB TA 4 DIA T8G
RIM = 559.58
INV. = 550.30 N
INV. = 550.20 S

*IDS-5083
STA 508+19, 55.0'RT
MAN TA 4 DIA T8G
RIM = 552.70
INV. = 550.00 N
INV. = 546.75 S

IDS-5085
STA 508+49, 122.2'RT
METAL FL END SEC 18"
INV. = 520.50

IDS-5086
STA 508+70, 119'RT
PRC FLAR END SEC 12
INV. = 520.30

IDS-5087
STA 508+93, 124.0'RT
MH TA 6D W/2 T1FCL RP
RIM = 524.00
INV. = 520.26 N, S

*IDS-6013
STA 60+13, 4.5'LT
MAN TA 6 DIA T8G
RIM = 565.20
INV. = 554.75 N
INV. = 550.24 E
INV. = 554.68 S

*IDS-6204
STA 62+00, 4.0'LT
CB TA 5 DIA T8G
RIM = 558.66
INV. = 551.46 N
INV. = 548.71 W, E

IDS-6205
STA 62+00, 9.5'LT
CB TA 4 DIA T8G
RIM = 556.40
INV. = 551.50 E

*IDS-6302
STA 63+00, 4.0'LT
CB TA 5 DIA T8G
RIM = 554.20
INV. = 546.91 E
INV. = 547.91 W

*IDS-6401
STA 64+00, 4.5'LT
CB TA 5 DIA T8G
RIM = 551.50
INV. = 543.91 E
INV. = 546.11 W

*IDS-6474
STA 64+75, 4.5'LT
CB TA 5 DIA T8G
RIM = 549.30
INV. = 543.21 E
INV. = 543.31 W

SS-1300
STORM SEW CL A 2 15
129' @ 0.35%
TBF = 0.0 CY

SS-1450
STORM SEW CL A 2 15
93' @ 1.62%
TBF = 13.8 CY

SS-1500
STORM SEW CL A 2 15
246' @ 0.40%
TBF = 0.0 CY

SS-1550
STORM SEW CL A 2 15
93' @ 1.51%
TBF = 10.9 CY

SS-1650
STORM SEW CL A 2 15
4' @ 2.89%
TBF = 0.7 CY

SS-1651
STORM SEW CL A 2 15
95' @ 0.64%
TBF = 31 CY

SS-1800
STORM SEW CL A 2 15
98' @ 0.85%
TBF = 0.0 CY

SS-6016
STORM SEW CL A 3 24
85' @ 0.70%
TBF = 73.2 CY

SS-6035
STORM SEW CL A 2 24
108' @ 1.00%
TBF = 83.4 CY

SS-6070
STORM SEW CL A 2 15
113' @ 1.70%
TBF = 70.3 CY

SS-6071
STORM SEW CL A 2 15
5' @ 1.00%
TBF = 0.4 CY

SS-1337
STORM SEW CL A 2 15
54' @ 3.30%
TBF = 0.0 CY

SS-1350
STORM SEW CL A 2 15
92' @ 1.38%
TBF = 12.2 CY

SS-5081
STORM SEW CL A 2 15
7' @ 0.63%
TBF = 0.0 CY

SS-5082
STORM SEW CL A 2 15
21' @ 0.97%
TBF = 0.0 CY

SS-5083
PIPE DRAINS 18
65' @ 40.0%
TBF = 0.0 CY

ISS-5086
P CUL CL A 1 12
6' @ 0.50%
TBF = 0.0 CY

ISS-5087
STORM SEW MN REQ 12
51' @ 0.50%
TBF = 1.3 CY

ISS-6002
P CUL CL A 2 24 TEMP
3' @ 2.0%
TBF = 5.0 CY

ISS-6003
P CUL CL A 2 24 TEMP
2' @ 1.00%
TBF = 4.4 CY

ISS-6013
P CUL CL A 2 36 TEMP
182' @ 0.84%
TBF = 459.2 CY

ISS-6204
P CUL CL A 2 36 TEMP
95' @ 0.84%
TBF = 136.7 CY

ISS-6205
P CUL CL A 2 12 TEMP
1' @ 4.00%
TBF = 3.0 CY

ISS-6302
P CUL CL A 2
36 TEMP
95' @ 0.84%
TBF = 95.0 CY

ISS-6402
P CUL CL A 2
36 TEMP
70' @ 0.86%
TBF = 22.3 CY

ISS-6474
P CUL CL A 1
36 TEMP
45' @ 0.87%
TBF = 39.1 CY

MODEL: Default
FILE NAME: pw://transystems-pw.bentley.com:transyscorp-pw1-hosted/Documents/Projects_2018/CH401/401180022/03-WSP/CAD/62R23-RB-1/Sheets/CH401D162R23-sht-drainplan2.dgn

WSP USA Inc.
30 N. LASALLE STREET
SUITE 4200
CHICAGO, IL 60602
TEL: (312) 782-8150

USER NAME = USHC706648	DESIGNED - DB	REVISED -	
	DRAWN - HC	REVISED -	
PLOT SCALE = 100.000 ' / in.	CHECKED - KS	REVISED -	
PLOT DATE = 11/6/2025	DATE - 11/7/2025	REVISED -	

STATE OF ILLINOIS
DEPARTMENT OF TRANSPORTATION

PROPOSED DRAINAGE AND UTILITY PLAN
I–80

SCALE: 1" = 50' | SHEET 2 OF 4 SHEETS | STA. TO STA.

F.A.I. RTE.	SECTION	COUNTY	TOTAL SHEETS	SHEET NO.
80	FAI 80 21 STRUCTURE 2	WILL	1230	338

CONTRACT NO. 62R23

ILLINOIS | FED. AID PROJECT

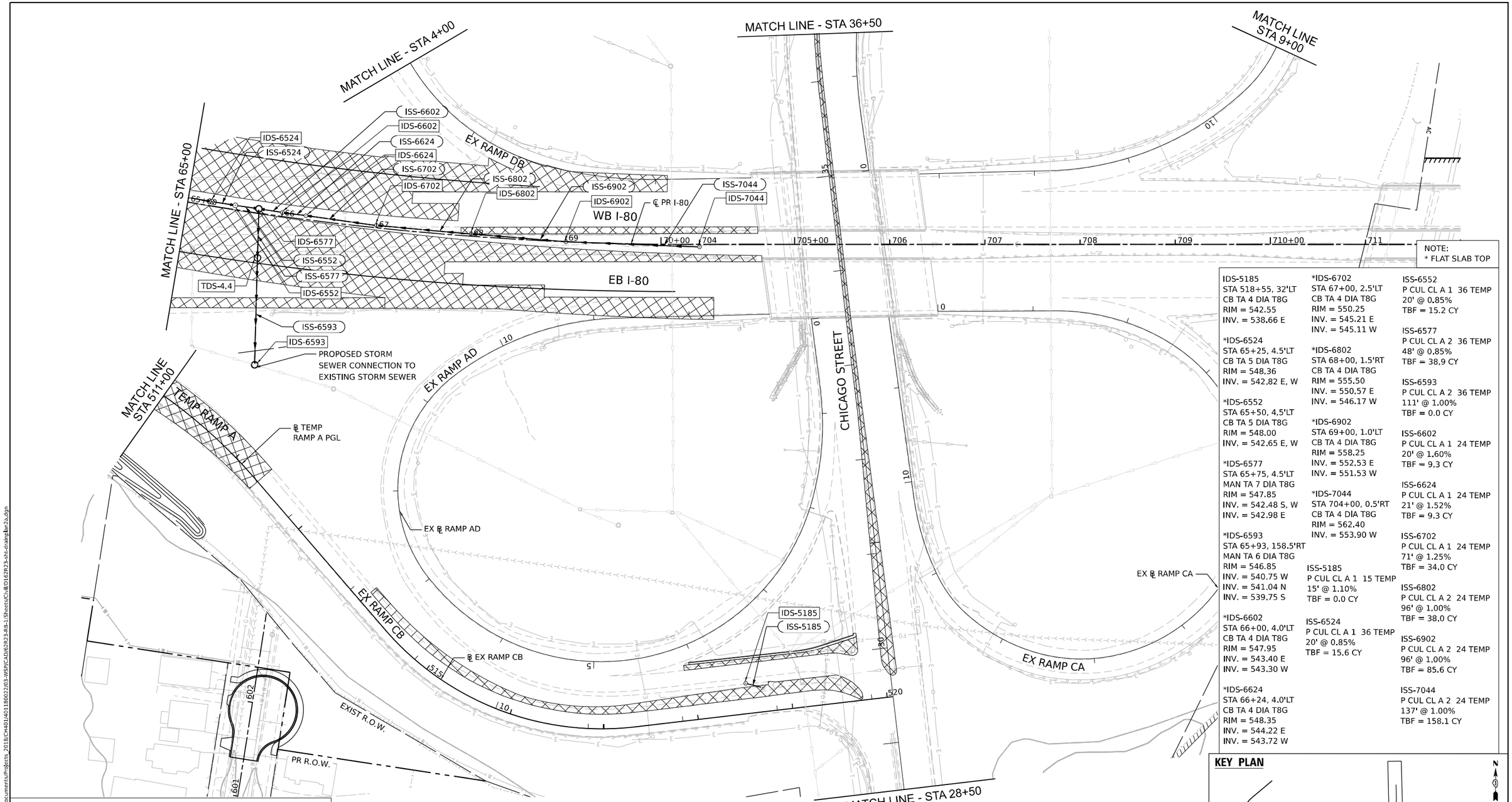

NOTE:
* FLAT SLAB TOP

IDS-5185
STA 518+55, 32'LT
CB TA 4 DIA T8G
RIM = 542.55
INV. = 538.66 E

*IDS-6524
STA 65+25, 4.5'LT
CB TA 5 DIA T8G
RIM = 548.36
INV. = 542.82 E, W

*IDS-6552
STA 65+50, 4.5'LT
CB TA 5 DIA T8G
RIM = 548.00
INV. = 542.65 E, W

*IDS-6577
STA 65+75, 4.5'LT
MAN TA 7 DIA T8G
RIM = 547.85
INV. = 542.48 S, W
INV. = 542.98 E

*IDS-6593
STA 65+93, 158.5'RT
MAN TA 6 DIA T8G
RIM = 546.85
INV. = 540.75 W
INV. = 541.04 N
INV. = 539.75 S

*IDS-6602
STA 66+00, 4.0'LT
CB TA 4 DIA T8G
RIM = 547.95
INV. = 543.40 E
INV. = 543.30 W

*IDS-6624
STA 66+24, 4.0'LT
CB TA 4 DIA T8G
RIM = 548.35
INV. = 544.22 E
INV. = 543.72 W

*IDS-6702
STA 67+00, 2.5'LT
CB TA 4 DIA T8G
RIM = 550.25
INV. = 545.21 E
INV. = 545.11 W

*IDS-6802
STA 68+00, 1.5'RT
CB TA 4 DIA T8G
RIM = 555.50
INV. = 550.57 E
INV. = 546.17 W

*IDS-6902
STA 69+00, 1.0'LT
CB TA 4 DIA T8G
RIM = 558.25
INV. = 552.53 E
INV. = 551.53 W

*IDS-7044
STA 704+00, 0.5'RT
CB TA 4 DIA T8G
RIM = 562.40
INV. = 553.50 W

ISS-5185
P CUL CL A 1 15 TEMP
15' @ 1.10%
TBF = 0.0 CY

ISS-6524
P CUL CL A 1 36 TEMP
20' @ 0.85%
TBF = 15.6 CY

ISS-6552
P CUL CL A 1 36 TEMP
20' @ 0.85%
TBF = 15.2 CY

ISS-6577
P CUL CL A 2 36 TEMP
48' @ 0.85%
TBF = 38.9 CY

ISS-6593
P CUL CL A 2 36 TEMP
111' @ 1.00%
TBF = 0.0 CY

ISS-6602
P CUL CL A 1 24 TEMP
20' @ 1.60%
TBF = 9.3 CY

ISS-6624
P CUL CL A 1 24 TEMP
21' @ 1.52%
TBF = 9.3 CY

ISS-6702
P CUL CL A 1 24 TEMP
71' @ 1.25%
TBF = 34.0 CY

ISS-6802
P CUL CL A 2 24 TEMP
96' @ 1.00%
TBF = 38.0 CY

ISS-6902
P CUL CL A 2 24 TEMP
96' @ 1.00%
TBF = 85.6 CY

ISS-7044
P CUL CL A 2 24 TEMP
137' @ 1.00%
TBF = 158.1 CY

KEY PLAN

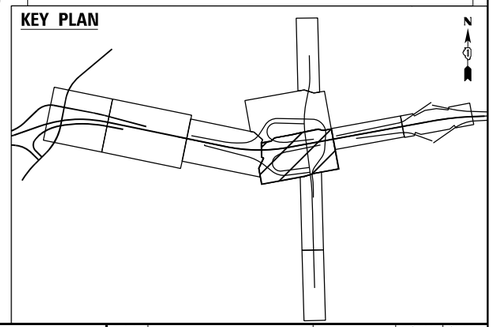

LEGEND

- PR. INLET
- PR. CATCH BASIN
- PR. MANHOLE
- PR. UNDERDRAIN HEADWALL
- PR. END SECTION
- PR. SWALE
- PR. STORM SEWER
- PR. PIPE UNDERDRAIN
- PR. RIP RAP APRON
- XXXX PR. STRUCTURE
- XXXX PR. PIPE
- PR. DITCH

NOTES:

1. FOR PIPE UNDERDRAIN DETAILS AND SCHEDULE, SEE SHEET 385
2. FOR PLACEMENT OF DRAINAGE STRUCTURE, SEE SHEET 383
3. FOR RIPRAP DETAILS, SEE SHEET 384

N

0 50 100 150
SCALE IN FEET

WSP USA Inc.
20 N. LASALLE STREET
SUITE 4200
CHICAGO, IL 60602
TEL: (312) 782-8150

USER NAME = USHC706648	DESIGNED - AKG	REVISED -	
	DRAWN - SSM	REVISED -	
PLOT SCALE = 100.000 ' / in.	CHECKED - KS	REVISED -	
PLOT DATE = 11/6/2025	DATE - 11/7/2025	REVISED -	

STATE OF ILLINOIS
DEPARTMENT OF TRANSPORTATION

PROPOSED DRAINAGE AND UTILITY PLAN
I-80

SCALE: 1" = 50' | SHEET 3 OF 4 SHEETS | STA. TO STA.

F.A.I. RTE.	SECTION	COUNTY	TOTAL SHEETS	SHEET NO.
80	FAI 80 21 STRUCTURE 2	WILL	1230	339
		CONTRACT NO. 62R23		
	ILLINOIS	FED. AID PROJECT		

MODEL: Default
FILE NAME: pw://transystems-pw.bentley.com:transyscorp-pw1-hosted/Documents/Projects_2018/CH401/401180022/03-WSP/CAD/62R23-RB-1/Sheets/Civil/D162R23-sht-drainplan2a.dgn

KEY PLAN

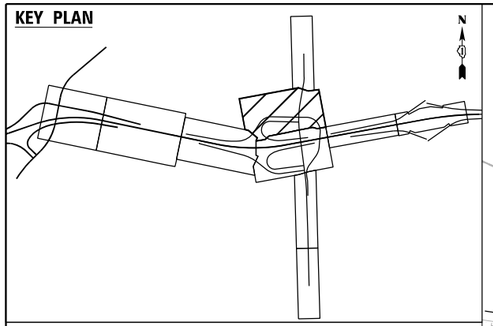

LEGEND

PR. INLET	PR. STORM SEWER
PR. CATCH BASIN	PR. PIPE UNDERDRAIN
PR. MANHOLE	PR. RIP RAP APRON
PR. UNDERDRAIN HEADWALL	XXXX PR. STRUCTURE
PR. END SECTION	XXXX PR. PIPE
PR. SWALE	PR. DITCH

NOTES:

1. FOR PIPE UNDERDRAIN DETAILS AND SCHEDULE, SEE SHEET 385
2. FOR PLACEMENT OF DRAINAGE STRUCTURE, SEE SHEET 383
3. FOR RIPRAP DETAILS, SEE SHEET 384

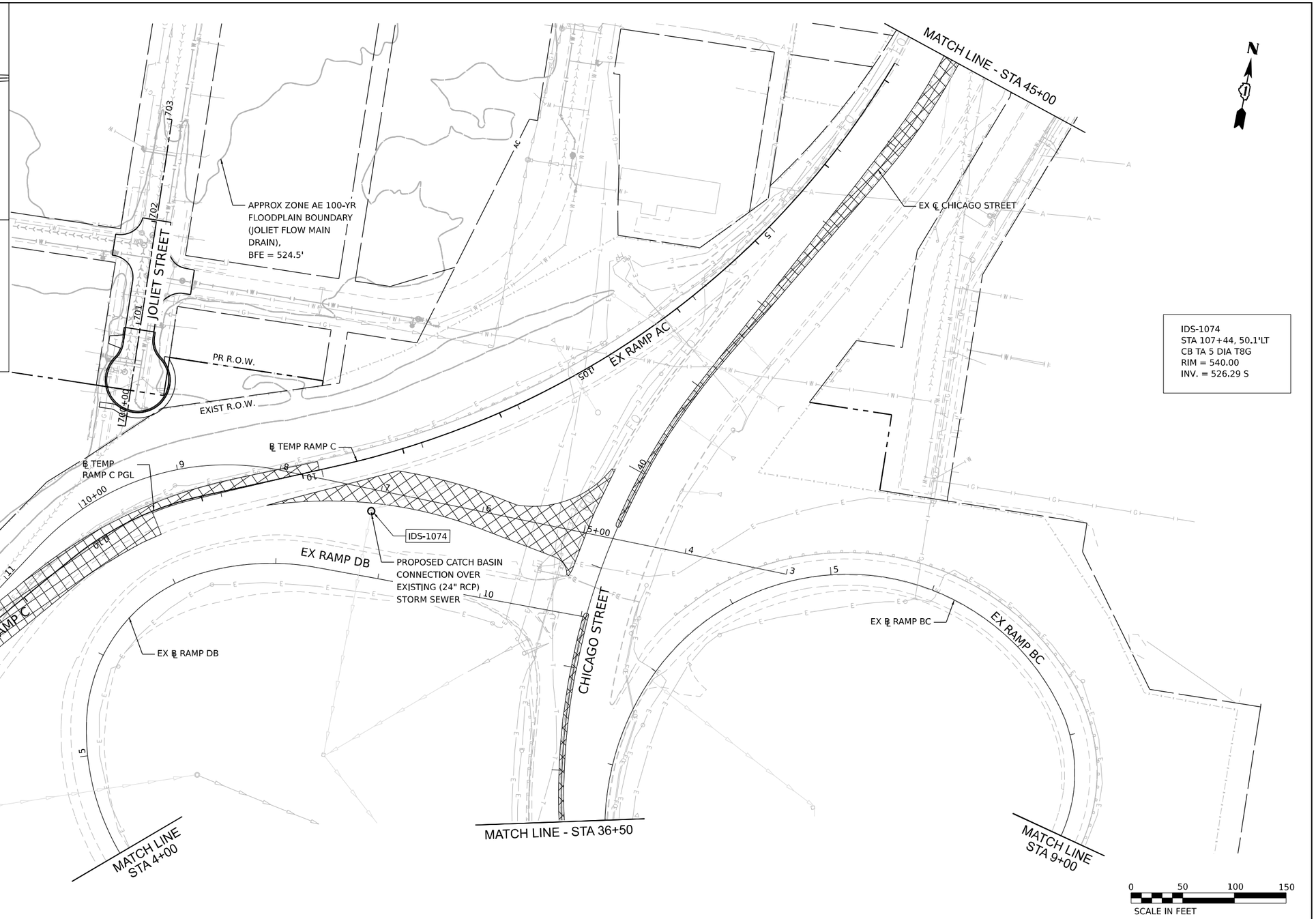

IDS-1074
STA 107+44, 50.1'LT
CB TA 5 DIA T8G
RIM = 540.00
INV. = 526.29 S

MODEL: Default
FILE NAME: pw://transystems-pw.bentley.com:transyscorp-pw1-hosted/Documents/Projects_2018/CH401/401180022/03-WSP/CAD/62R23-RB-1/Sheets/Civil/D62R23-sht-drainplan2b.dgn

WSP USA Inc.
20 N. LASALLE STREET
SUITE 4200
CHICAGO, IL 60602
TEL: (312) 782-8150

USER NAME = USHC706648	DESIGNED - AKG	REVISED -	
	DRAWN - SSM	REVISED -	
PLOT SCALE = 100.000 ' / in.	CHECKED - KS	REVISED -	
PLOT DATE = 11/6/2025	DATE - 11/7/2025	REVISED -	

STATE OF ILLINOIS
DEPARTMENT OF TRANSPORTATION

PROPOSED DRAINAGE AND UTILITY PLAN
I–80

SCALE: 1" = 50' | SHEET 4 OF 4 SHEETS | STA. | TO STA.

F.A.I. RTE.	SECTION	COUNTY	TOTAL SHEETS	SHEET NO.
80	FAI 80 21 STRUCTURE 2	WILL	1230	340
		CONTRACT NO. 62R23		
	ILLINOIS	FED. AID PROJECT		

LEGEND

	PR. INLET		PR. STORM SEWER
	PR. CATCH BASIN		PR. PIPE UNDERDRAIN
	PR. UNDERDRAIN HEADWALL		PR. RIP RAP APRON
	PR. END SECTION	XXXX	PR. STRUCTURE
	PR. MANHOLE	XXXX	PR. PIPE
	PR. SWALE		PR. DITCH

NOTES:

1. FOR PIPE UNDERDRAIN DETAILS AND SCHEDULE, SEE SHEET 385
2. FOR PLACEMENT OF DRAINAGE STRUCTURE, SEE SHEET 383
3. FOR RIPRAP DETAILS, SEE SHEET 384

CHICAGO RAMP A

TEMP RAMP A

6081

IDS-5082

IDS-5083

ISS-5081

ISS-5082

ISS-5083

IDS-5085

INTERIM DRAINAGE CONNECTION DESIGN FOR CONTRACT 62R23

EXIST R.O.W.

PR R.O.W.

IDS-5086

ISS-5086

IDS-5087

ISS-5087

CONNECT TO EXISTING DRAINAGE STRUCTURE INV. = 520.00

20' OVERFLOW WEIR ELEV = 523.00 (SEE DETAIL, BELOW)

TURF REINFORCEMENT MAT, 32' x 18'

RAMP A INTERIM STORMWATER DETENTION BASIN 10-YR STORAGE VOLUME 0.63 AC-FT HWL = 523.00

APPROX ZONE AE 100-YR FLOODPLAIN BOUNDARY (JOLIET FLOW MAIN DRAIN), BFE = 524.5'

DES PLAINES ST

WATER STREET

N

0 20 40 60

SCALE IN FEET

KEY PLAN

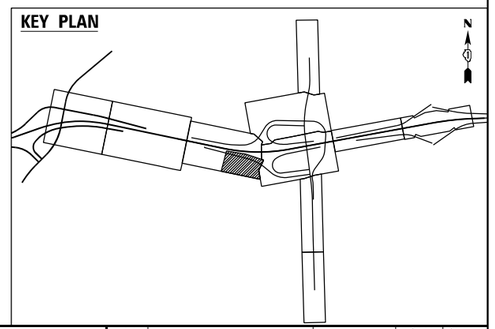

DETENTION POND VOLUME (RAMP A POND)						
ELEVATION	AREA	AVG AREA	DEPTH	VOL (CU. FT.)	∑ VOL (CU. FT.)	∑ VOL (AC-FT)
520.3	0.0					
521.0	2673.8	1336.9	0.7	935.8	935.8	0.02
521.5	7098.3	4886.1	0.5	2443.0	3378.9	0.08
522.0	13285.0	10191.7	0.5	5095.8	8474.7	0.19
522.5	19713.5	16499.3	0.5	8249.6	16724.3	0.38
523.0	23825.4	21769.5	0.5	10884.7	27609.0	0.63

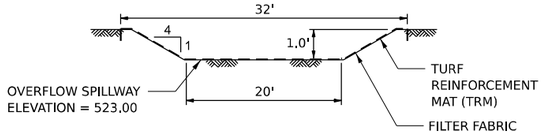

OVERFLOW SPILLWAY DETAIL

(NOT TO SCALE)

MODEL: Default
FILE NAME: pw://transystems-pw.bentley.com:transyscorp-pw1-hosted/Documents/Projects_2018/CH401/401180022/03-WSP/CAD/62R23-RB-1/Sheets/Civil/D162R23-sht-drainbsdn-rampA.dgn

WSP USA Inc.
30 N. LASALLE STREET
SUITE 4200
CHICAGO, IL 60602
TEL: (312) 782-8150

USER NAME = USHC706648	DESIGNED - DB	REVISED -	
	DRAWN - HC	REVISED -	
PLOT SCALE = 40.000 ' / in.	CHECKED - KS	REVISED -	
PLOT DATE = 11/6/2025	DATE - 11/7/2025	REVISED -	

STATE OF ILLINOIS
DEPARTMENT OF TRANSPORTATION

RAMP A
INTERIM DETENTION POND PLAN

SCALE: 1" = 20' | SHEET 1 OF 1 SHEETS | STA. TO STA.

F.A.I. RTE.	SECTION	COUNTY	TOTAL SHEETS	SHEET NO.
80	FAI 80 21 STRUCTURE 2	WILL	1230	341
		CONTRACT NO. 62R23		
	ILLINOIS	FED. AID PROJECT		

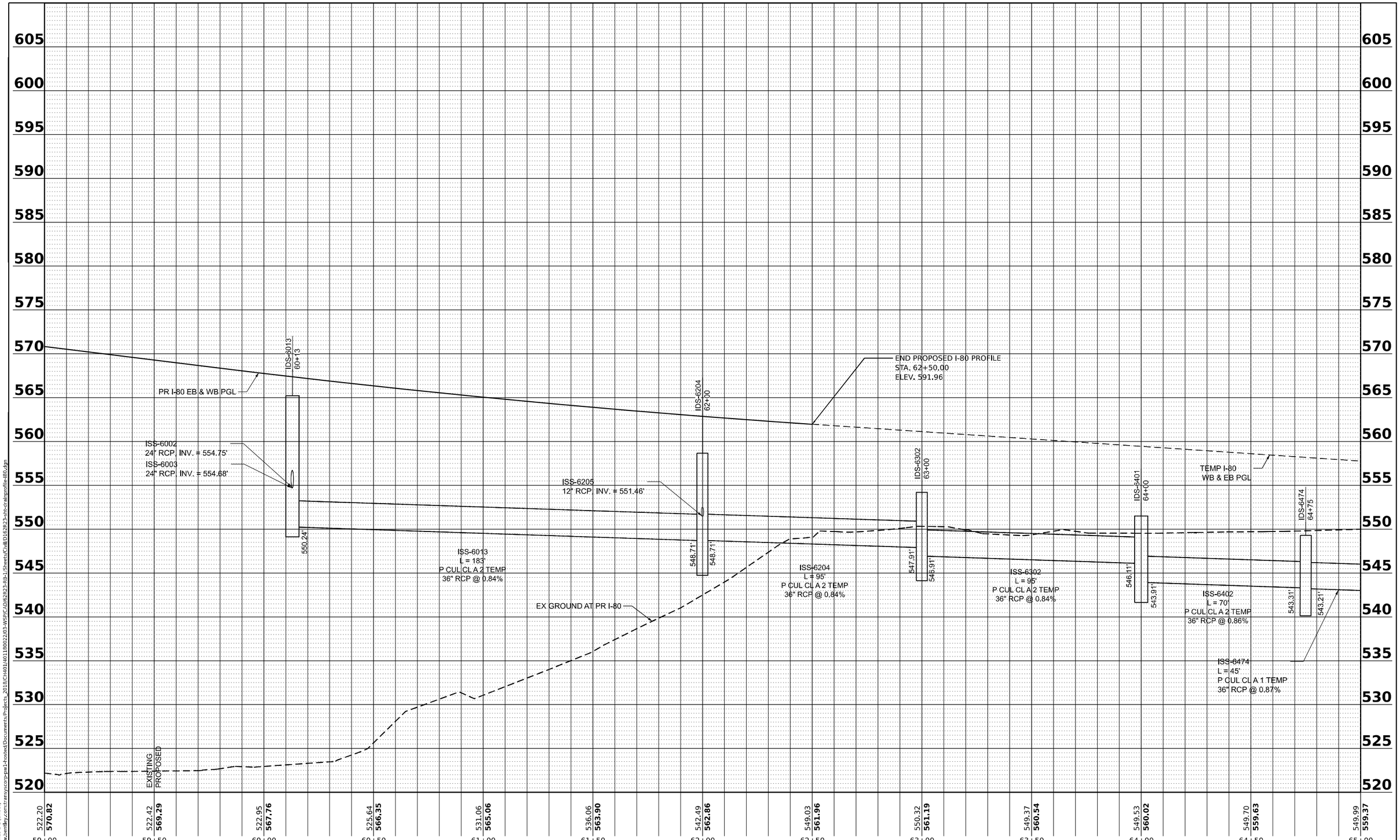

PLAN		BY	DATE
	SURVEYED		
	PLOTTED		
	ALIGNMENT CHECKED		
NOTE BOOK	RT. OF WAY CHECKED		
NO.	CADD FILE NAME		

PROFILE		BY	DATE
	SURVEYED		
	PLOTTED		
	GRADES CHECKED		
NOTE BOOK	BAR. NOTED		
NO.	STRUCTURE NOTAT'NS CH'KD		

MODEL: I80-BMCD_profile-1 + Profile 1-1 [Sheet]
FILE NAME: pw://transystems-pw.bentley.com:transyscorp-pw1-hosted/Documents/Projects_2018/CH401/401180022/03-WSP/CAD/62R23-RB-1/Sheets/Civil/D162R23-sht-rdrailprofile80.dgn

WSP USA Inc.
30 N. LASALLE STREET
SUITE 4200
CHICAGO, IL 60602
TEL: (312) 782-8150

USER NAME = USHC706648	DESIGNED - DB	REVISED -	
	DRAWN - HC	REVISED -	
PLOT SCALE = 0.16666667 ' / in.	CHECKED - KS	REVISED -	
PLOT DATE = 11/6/2025	DATE - 11/7/2025	REVISED -	

STATE OF ILLINOIS
DEPARTMENT OF TRANSPORTATION

PROPOSED DRAINAGE AND UTILITY PROFILE
I–80

SCALE: HORIZ: 1"=50' VERT: 1"=5' | SHEET 1 OF 2 SHEETS | STA. TO STA.

F.A.I. RTE.	SECTION	COUNTY	TOTAL SHEETS	SHEET NO.
80	FAI 80 21 STRUCTURE 2	WILL	1230	342
		CONTRACT NO. 62R23		
		ILLINOIS	FED. AID PROJECT	

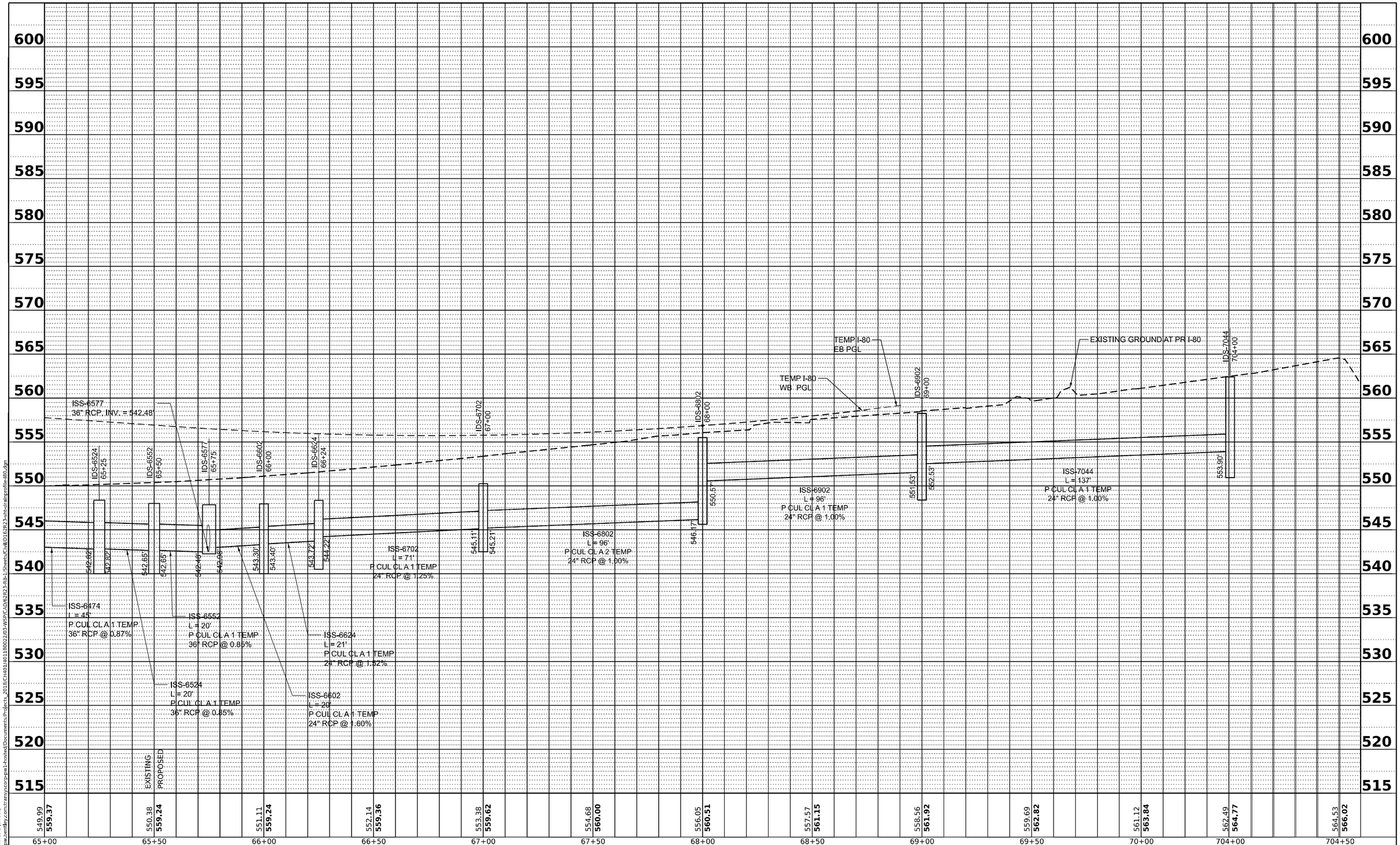

PLAN	BY	DATE
SURVEYED		
PLOTTED		
ALIGNMENT CHECKED		
RT. OF WAY CHECKED		
CADD FILE NAME		
NOTE BOOK NO.		

PROFILE	BY	DATE
SURVEYED		
PLOTTED		
GRADES CHECKED		
B.M. NOTED		
STRUCTURE NOTATNS CHKD		
NOTE BOOK NO.		

MODEL: I80-MVCD_profile-1 - Profile 2 [Sheet]
FILE NAME: pw://transystems-pw.bentley.com:transyscorp-pw1-hosted/Documents/Projects_2018/CH401/401180022/03-WSP/CAD/62R23-sht-drainprofile-I80.dgn

WSP USA Inc.
30 N. LASALLE STREET
SUITE 4200
CHICAGO, IL 60602
TEL: (312) 782-8150

USER NAME = USHC706648	DESIGNED - DB	REVISED -	
	DRAWN - HC	REVISED -	
PLOT SCALE = 0.16666667 ' / in.	CHECKED - KS	REVISED -	
PLOT DATE = 11/6/2025	DATE - 11/7/2025	REVISED -	

STATE OF ILLINOIS
DEPARTMENT OF TRANSPORTATION

PROPOSED DRAINAGE AND UTILITY PROFILE
I–80

SCALE: HORIZ: 1"=50' VERT: 1"=5' | SHEET 2 OF 2 SHEETS | STA. TO STA.

F.A.I. RTE.	SECTION	COUNTY	TOTAL SHEETS	SHEET NO.
80	FAI 80 21 STRUCTURE 2	WILL	1230	343

CONTRACT NO. 62R23

ILLINOIS | FED. AID PROJECT

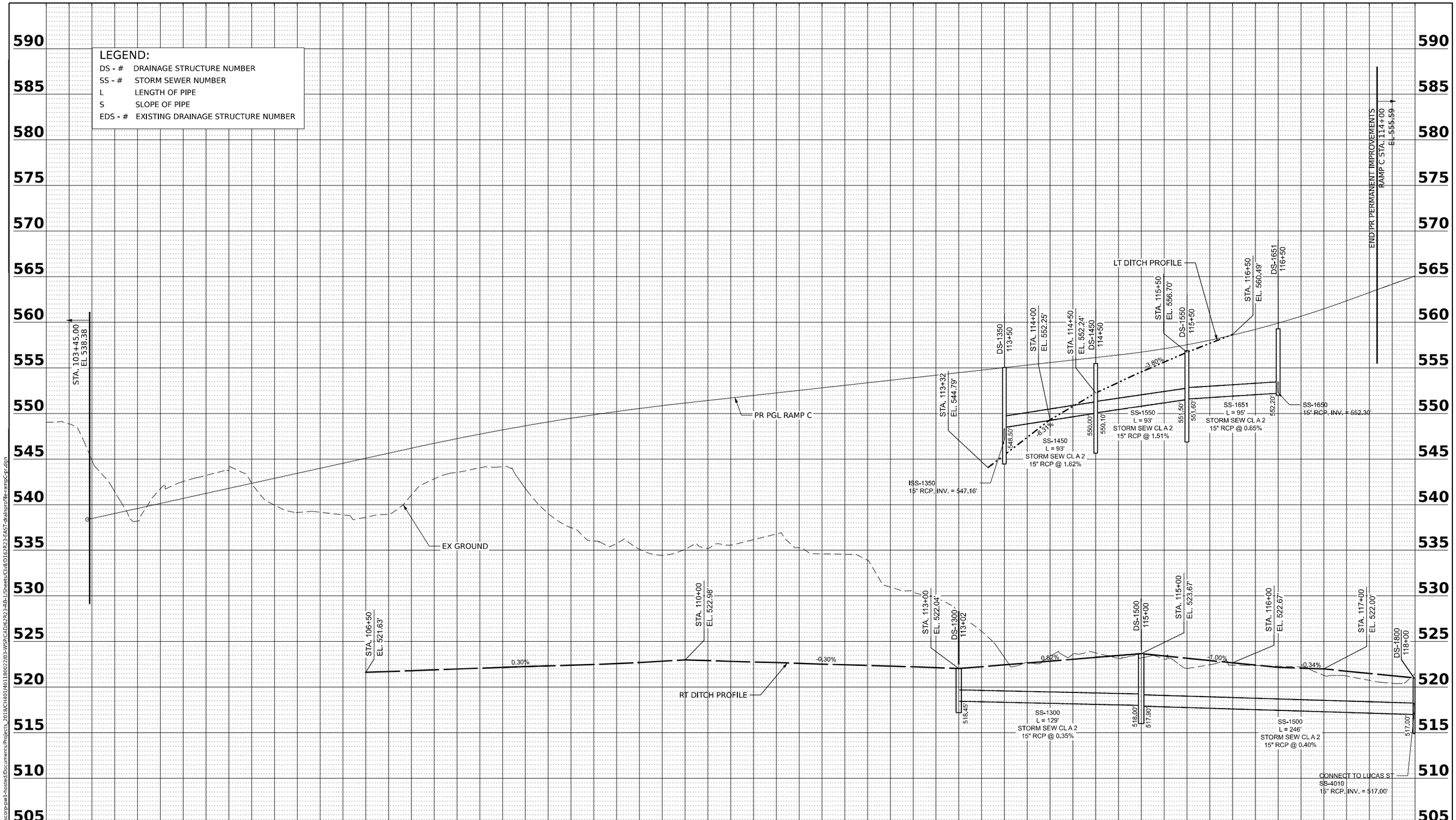

PLAN	BY	DATE
SURVEYED		
PLOTTED		
ALIGNMENT CHECKED		
RT. OF WAY CHECKED		
CADD FILE NAME		
NOTE BOOK NO.		

PROFILE	BY	DATE
SURVEYED		
PLOTTED		
GRADES CHECKED		
B.M. NOTED		
STRUCTURE NOTAT'NS CHKD		
NOTE BOOK NO.		

MODEL: Ramp C_profile - Profile 1 [Sheet]
FILE NAME: pw://transystems-pw.bentley.com:transyscorp-pw1-hosted/Documents/Projects_2018/CH401/401180022/03-WSP/CAD/62R23-RB-1/Sheets/Civil/D162R23-EAST-drainprofile-rampC-pr.dgn

WSP USA Inc.
30 N. LASALLE STREET
SUITE 4200
CHICAGO, IL 60602
TEL: (312) 782-8150

USER NAME = USHC706648	DESIGNED - CJF	REVISED -	
	DRAWN - CJF	REVISED -	
PLOT SCALE = 0.16666667 ' / in.	CHECKED - JJR	REVISED -	
PLOT DATE = 11/6/2025	DATE - 11/7/2025	REVISED -	

STATE OF ILLINOIS
DEPARTMENT OF TRANSPORTATION

PROPOSED DRAINAGE PROFILE
RAMP C

SCALE: HORIZ: 1"=50' VERT: 1"=5' | SHEET 1 OF 1 SHEETS | STA. TO STA.

F.A.I. RTE.	SECTION	COUNTY	TOTAL SHEETS	SHEET NO.
80	FAI 80 21 STRUCTURE 2	WILL	1230	344
		CONTRACT NO. 62R23		
		ILLINOIS	FED. AID PROJECT	

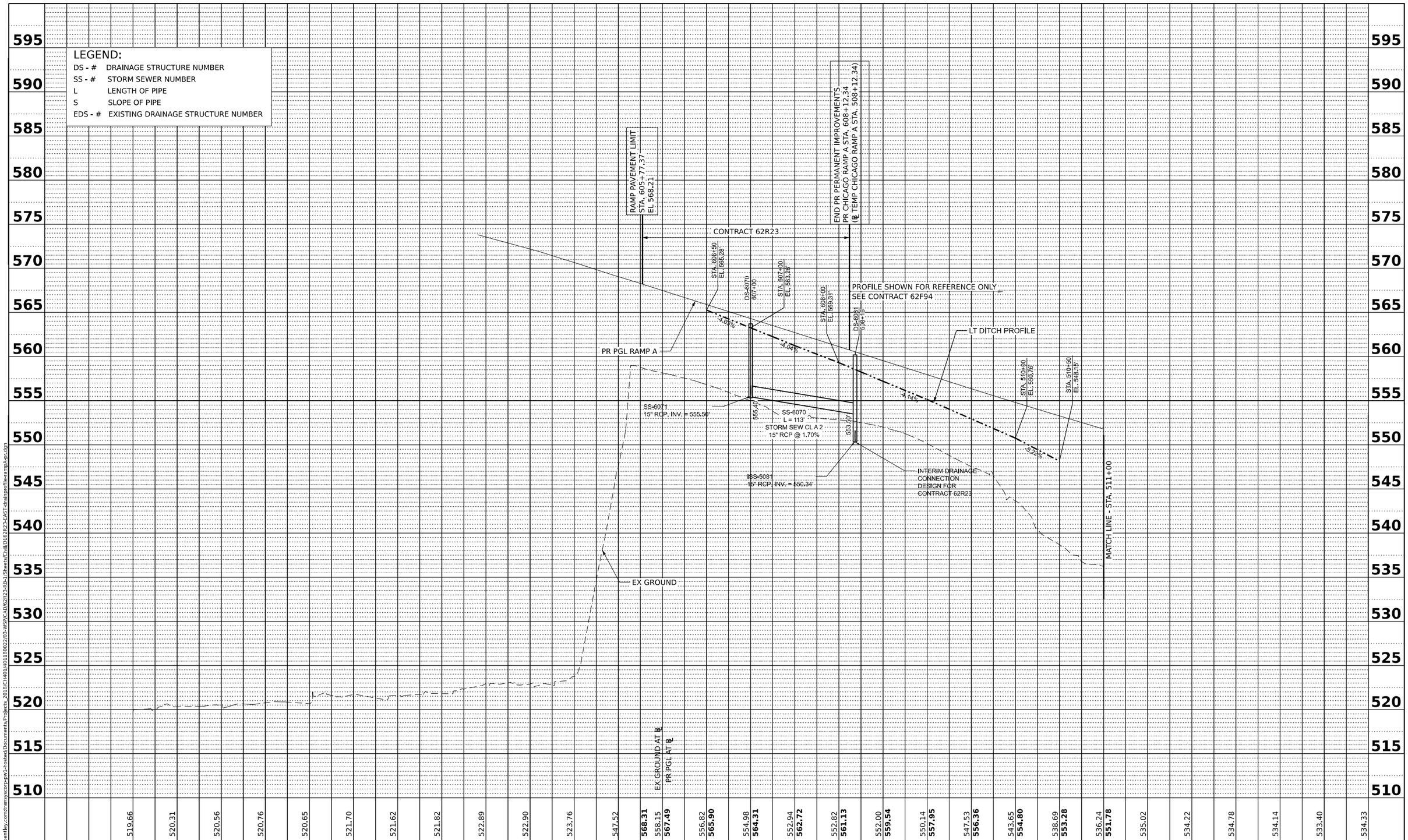

PLAN	BY	DATE
SURVEYED		
PLOTTED		
ALIGNMENT CHECKED		
RT. OF WAY CHECKED		
CADD FILE NAME		
NOTE BOOK NO.		

PROFILE	BY	DATE
SURVEYED		
PLOTTED		
GRADES CHECKED		
B.M., NOTED		
STRUCTURE NOTATNS CHKD		
NOTE BOOK NO.		

MODEL: Ramp A - Profile 1 [Sheet]
FILE NAME: pw://transystems-pw.bentley.com:transyscorp-pw1-hosted/Documents/Projects_2018/CH401/401180022/03-WSP/CAD/62R23-IB-1/Sheets/Civil/D1E2R23-EAST-drainprofile-ramp1-p-c.dgn

WSP USA Inc.
30 N. LASALLE STREET
SUITE 4200
CHICAGO, IL 60602
TEL: (312) 782-8150

USER NAME = USHC706648	DESIGNED - HC	REVISED -	
	DRAWN - HC	REVISED -	
PLOT SCALE = 0.16666667 ' / in.	CHECKED - KS	REVISED -	
PLOT DATE = 11/6/2025	DATE - 11/7/2025	REVISED -	

STATE OF ILLINOIS
DEPARTMENT OF TRANSPORTATION

PROPOSED DRAINAGE PROFILE
RAMP A

SCALE: HORIZ: 1"=50' VERT: 1"=5' | SHEET 1 OF 1 SHEETS | STA. TO STA.

F.A.I. RTE.	SECTION	COUNTY	TOTAL SHEETS	SHEET NO.
80	FAI 80 21 STRUCTURE 2	WILL	1230	345
		CONTRACT NO. 62R23		
	ILLINOIS	FED. AID PROJECT		

LEGEND

- PR. INLET
- PR. CATCH BASIN
- PR. MANHOLE
- PR. UNDERDRAIN HEADWALL
- PR. END SECTION
- PR. SWALE
- PR. DITCH
- PR. STORM SEWER
- PR. PIPE UNDERDRAIN
- PR. RIP RAP APRON
- XXXX PR. STRUCTURE
- XXXX PR. PIPE
- UC UTILITY CROSSING

DS-2151
STA. 215+34, 28.2' LT
CB TA 4 DIA T8G
RIM = 538.51
INV. = 535.18 (E)

DS-2150
STA. 215+34, 15.0' LT
MAN TA 6 DIA T1F CL
RIM = 539.18
INV. = 535.13 (N, W)

DS-2171
STA. 217+01, 28.2' LT
CB TA 4 DIA T8G
RIM = 539.87
INV. = 534.91 (E)

DS-2170
STA. 217+01, 15.5' LT
MAN TA 6 DIA T1F CL
RIM = 539.58
INV. = 534.86 (S, E, W)

DS-2172
STA. 217+25, 54.2' RT
CONC ES 542001 30 1:4
TRAVERSABLE PIPE GRATE
INV. = 534.73

SS-2151
SS CL A 1 EQRS 18
9' @ 0.55%
TBF = 1.0 CY

SS-2150
SS CL A 1 EQRS 24
162' @ 0.17%
TBF = 34.5 CY

SS-2171
SS CL A 1 EQRS 18
9' @ 0.61%
TBF = 2.7 CY

SS-2170
STORM SEW WM REQ 30
66' @ 0.20%
TBF = 6.0 CY

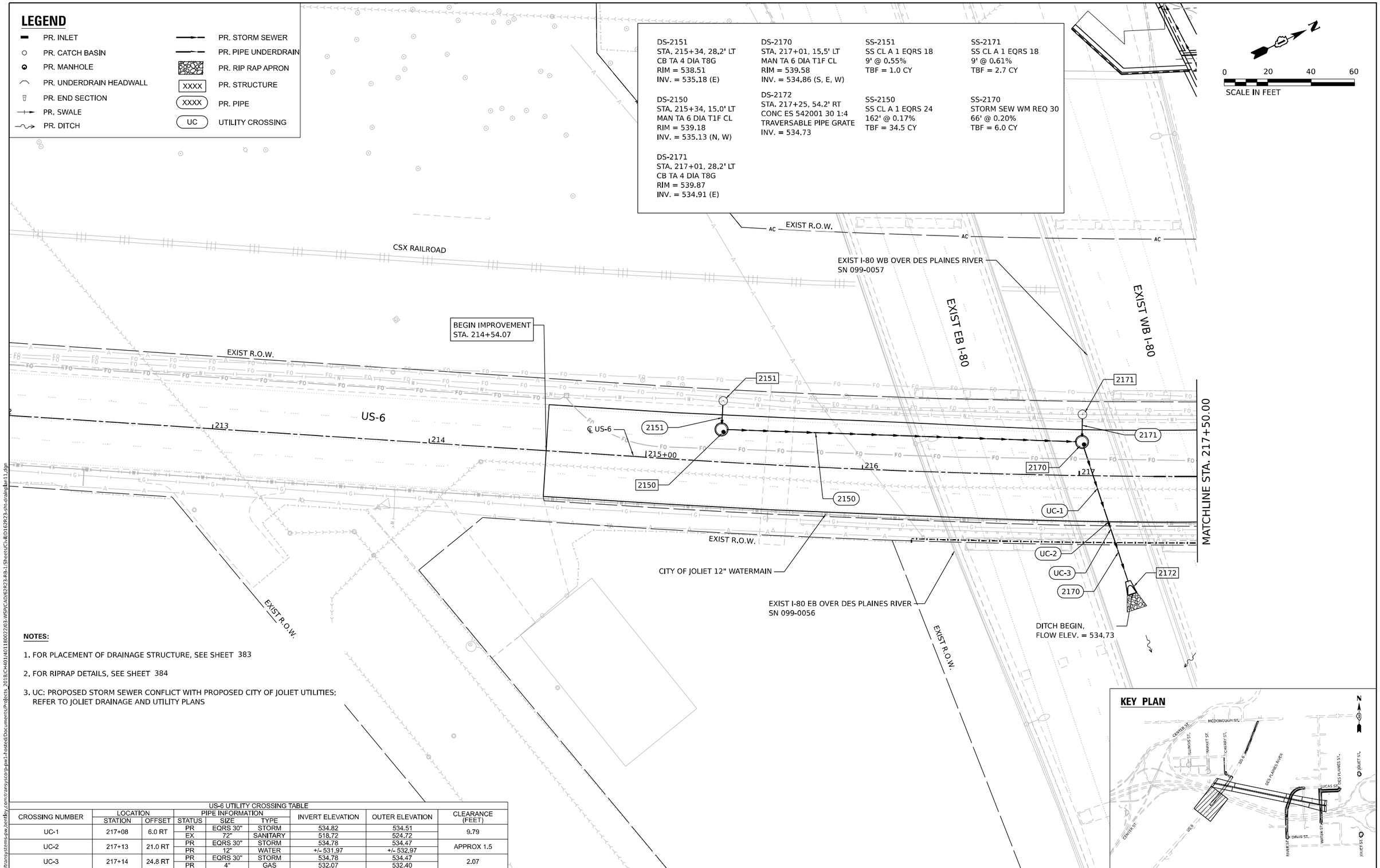

NOTES:

1. FOR PLACEMENT OF DRAINAGE STRUCTURE, SEE SHEET 383
2. FOR RIPRAP DETAILS, SEE SHEET 384
3. UC: PROPOSED STORM SEWER CONFLICT WITH PROPOSED CITY OF JOLIET UTILITIES; REFER TO JOLIET DRAINAGE AND UTILITY PLANS

US-6 UTILITY CROSSING TABLE

CROSSING NUMBER	LOCATION		PIPE INFORMATION			INVERT ELEVATION	OUTER ELEVATION	CLEARANCE (FEET)
	STATION	OFFSET	STATUS	SIZE	TYPE			
UC-1	217+08	6.0 RT	PR	EQRS 30"	STORM	534.82	534.51	9.79
			EX	72"	SANITARY	518.72	524.72	
UC-2	217+13	21.0 RT	PR	EQRS 30"	STORM	534.78	534.47	APPROX 1.5
			PR	12"	WATER	+/- 531.97	+/- 532.97	
UC-3	217+14	24.8 RT	PR	EQRS 30"	STORM	534.78	534.47	2.07
			PR	4"	GAS	532.07	532.40	

WSP USA Inc.
30 N. LASALLE STREET
SUITE 4200
CHICAGO, IL 60602
TEL: (312) 782-8130

USER NAME = USHC706648	DESIGNED - AKG	REVISED -	
	DRAWN - SSM	REVISED -	
PLOT SCALE = 40.000 ' / in.	CHECKED - KS	REVISED -	
PLOT DATE = 11/6/2025	DATE - 11/7/2025	REVISED -	

STATE OF ILLINOIS
DEPARTMENT OF TRANSPORTATION

PROPOSED DRAINAGE AND UTILITY PLAN
US–6

SCALE: 1"=20' | SHEET 1 OF 4 SHEETS | STA. TO STA.

F.A.I. RTE.	SECTION	COUNTY	TOTAL SHEETS	SHEET NO.
80	FAI 80 21 STRUCTURE 2	WILL	1230	346

CONTRACT NO. 62R23

ILLINOIS | FED. AID PROJECT

MODE: Default
FILE NAME: pw://transystems-pw.bentley.com:transyscorp-pw1-hosted/Documents/Projects_2018/CH401401180022/03-WSP/CAD/62R23-RB-1/Sheets/CH_RD162R23-site-drainplan11.dgn

LEGEND

- PR. INLET
- PR. CATCH BASIN
- PR. MANHOLE
- PR. UNDERDRAIN HEADWALL
- PR. END SECTION
- PR. SWALE
- PR. DITCH
- PR. STORM SEWER
- PR. PIPE UNDERDRAIN
- PR. RIP RAP APRON
- XXXX PR. STRUCTURE
- XXXX PR. PIPE
- UC UTILITY CROSSING

0 20 40 60
SCALE IN FEET

PR PERM EASEMENT
PR R.O.W.
℄ I-80
℄ CENTER RAMP C
℄ CHERRY ST.
EXIST R.O.W.
PR PERM EASEMENT
MATCHLINE STA. 217+50.00
℄ US-6
US-6
CITY OF JOLIET 12" WATERMAIN
DITCH FLOW ELEV. = 534.95
EXIST WB I-80
EXIST R.O.W.
EB I-80
WB I-80
PROPOSED DITCH
BOTTOM WIDTH = 8'
SIDE SLOPES = 1:6
408 L.F. @ 0.3%
FLOW DEPTH = 1.5'
FLOW ELEV. = 534.72
EXIST I-80 WB OVER DES PLAINES RIVER
SN 099-0057
CHERRY STREET STA. 500+00.00 = US-6 STA. 221+20.02
END IMPROVEMENT STA. 221+75.00
PR R.O.W.
EX STORM MH WITH PUMP
6" DIA OUTLET PUMPED OVER RIVER WALL, OUTFALL INV. = 542.70
RIM = 534.00
18" SEWER IN, INV. = 528.50
24" SEWER OUT, INV. = 528.50
BOTTOM EL = 526.50
EX CATCH BASIN
RIM = 533.50
EX INV. = 528.64 (18" E)
DITCH END,
FLOW ELEV.= 533.50

DS-2210
STA 221+60, 28'LT
CB TA 4 DIA T8G
RIM = 540.80
INV. = 536.93

DS-2211
STA 221+60, 15.5' LT
MH TA 5 DIA T1F CL
RIM = 541.85
INV. = 536.88 W
INV. = 536.38 S

DS-2200
STA 220+80, 28' LT
CB TA 4 DIA T8G
RIM = 540.70
INV. = 536.74

DS-2201
STA 220+80, 15.5' LT
MH TA 5 DIA T1F CL
RIM = 541.80
INV. = 536.69 W
INV. = 536.19 N, S

DS-2202
STA 219+20, 15,5' LT
MH TA 5 DIA T1F CL
RIM = 541.00
INV. = 536.80 W
INV. = 535.80 N, S

DS-2203
STA 219+20, 25' LT
CB TC 2 DIA T8G
RIM = 540.75
INV. =536.86

DS-2173
STA 217+75, 25.0' LT
MH TA 6 DIA T8G
RIM = 541.80
EX INV. = 535.97 (24" NW)
EX INV. = 536.33 (12" W) TO BE PLUGGED
EX INV. = 537.06 (8" W) TO BE PLUGGED
INV. = 535.77 (24" E)

DS-2174
STA 217+75, 15.5' LT
MH TA 6 DIA T1F CL
RIM = 540.20
INV. = 535.75 W
INV. = 535.45 N
INV. = 535.05 E

DS-2175
STA 217+75, 43.9' RT
CONC ES 542011 30 1:4
TRAVERSABLE PIPE GRATE
INV. = 534.95

SS-2210
STORM SEW CL A 1 18
8' @ 0.62%
TBF = 2.4 CY

SS-2211
STORM SEW CL A 2 24
75' @ 0.25%
TBF = 34.3 CY

SS-2200
STORM SEW CL A 1 18
8' @ 0.62%
TBF = 1.5 CY

SS-2201
STORM SEW CL A 1 24
155' @ 0.25%
TBF = 82.9 CY

SS-2202
STORM SEW CL A 1 24
140' @ 0.25%
TBF = 42.1 CY

SS-2203
STORM SEW CL A 1 18
5' @ 1.20%
TBF = 1.0 CY

SS-2173
STORM SEW CL A 1 24
4' @ 0.55%
TBF = 2.0 CY

SS-2174
STORM SEW WM
REQ 30
51' @ 0.20%
TBF = 15.7 CY

NOTES:

1. FOR PLACEMENT OF DRAINAGE STRUCTURE, SEE SHEET 383
2. FOR RIPRAP DETAILS, SEE SHEET 384
3. UC: PROPOSED STORM SEWER CONFLICT WITH PROPOSED CITY OF JOLIET UTILITIES; REFER TO JOLIET DRAINAGE AND UTILITY PLANS

US-6 UTILITY CROSSING TABLE

CROSSING NUMBER	LOCATION		PIPE INFORMATION			INVERT ELEVATION	OUTER ELEVATION	CLEARANCE (FEET)
	STATION	OFFSET	STATUS	SIZE	TYPE			
UC-4	217+74	6.2 RT	PR	EQRS 30"	STORM	535.02	534.71	9.95
			EX	72"	SANITARY	518.76	524.76	
UC-5	217+74	21.0 RT	PR	EQRS 30"	STORM	534.98	534.67	APPROX 1.5
			PR	12"	WATER	+/- 532.15	+/- 533.15	
UC-6	217+74	24.8 RT	PR	EQRS 30"	STORM	534.98	534.67	2.07
			PR	4"	GAS	532.27	532.60	

KEY PLAN

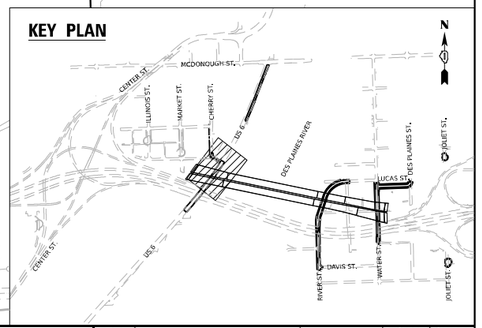

WSP USA Inc.
30 N. LASALLE STREET
SUITE 4200
CHICAGO, IL 60602
TEL: (312) 782-8150

USER NAME = USHC706648	DESIGNED - AKG	REVISED -	
	DRAWN - SSM	REVISED -	
PLOT SCALE = 40.000 ' / in.	CHECKED - KS	REVISED -	
PLOT DATE = 11/6/2025	DATE - 11/7/2025	REVISED -	

STATE OF ILLINOIS
DEPARTMENT OF TRANSPORTATION

PROPOSED DRAINAGE AND UTILITY PLAN
US-6

SCALE: 1"=20' | SHEET 2 OF 4 SHEETS | STA. TO STA.

F.A.I. RTE.	SECTION	COUNTY	TOTAL SHEETS	SHEET NO.
80	FAI 80 21 STRUCTURE 2	WILL	1230	347
		CONTRACT NO. 62R23		
		ILLINOIS	FED. AID PROJECT	

MODEL: Default
FILE NAME: pw://transystems-pw.bentley.com:transyscorp-pw1-hosted/Documents/Projects_2018/CH401/401180022/03-WSP/CAD/62R23-RB-1/Sheets/CivilD162R23-sht-drainplan12.dgn

LEGEND

- PR. INLET
- PR. CATCH BASIN
- PR. MANHOLE
- PR. UNDERDRAIN HEADWALL
- PR. END SECTION
- PR. SWALE
- PR. DITCH
- PR. STORM SEWER
- PR. PIPE UNDERDRAIN
- PR. RIP RAP APRON
- XXXX PR. STRUCTURE
- XXXX PR. PIPE
- UC UTILITY CROSSING

0 20 40 60
SCALE IN FEET

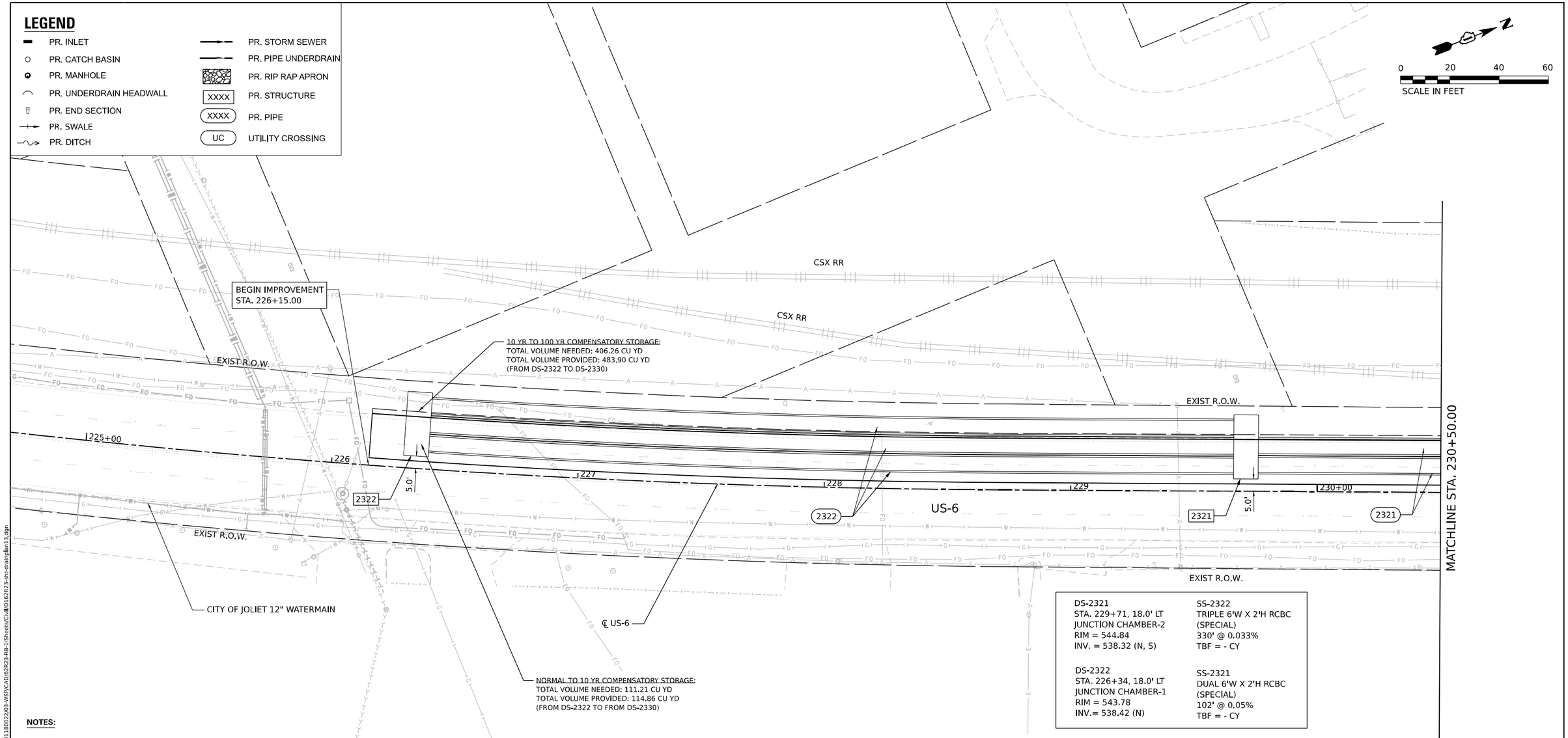

DS-2321 STA. 229+71, 18.0' LT JUNCTION CHAMBER-2 RIM = 544.84 INV. = 538.32 (N, S)	SS-2322 TRIPLE 6'W X 2'H RCBC (SPECIAL) 330' @ 0.033% TBF = - CY
DS-2322 STA. 226+34, 18.0' LT JUNCTION CHAMBER-1 RIM = 543.78 INV.= 538.42 (N)	SS-2321 DUAL 6'W X 2'H RCBC (SPECIAL) 102' @ 0.05% TBF = - CY

NOTES:

1. FOR PLACEMENT OF DRAINAGE STRUCTURE, SEE SHEET 383
2. FOR RIPRAP DETAILS, SEE SHEET 384
3. UC: PROPOSED STORM SEWER CONFLICT WITH PROPOSED CITY OF JOLIET UTILITIES; REFER TO JOLIET DRAINAGE AND UTILITY PLANS

KEY PLAN

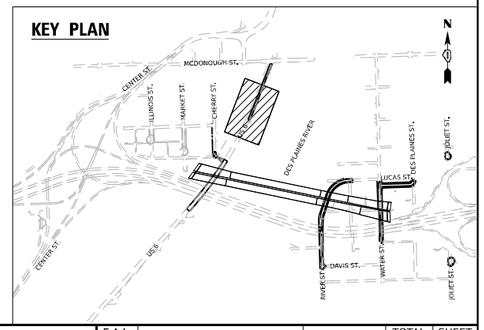

MODEL: Default
FILE NAME: pw://transystems-pw.bentley.com:transyscorp-pw1-hosted/Documents/Projects_2018/CH401/401180022/03-WSP/CAD/62R23-RB-1/Sheets/Civil/0162R23-sht-drainplan13.dgn

WSP USA Inc.
30 N. LASALLE STREET
SUITE 4200
CHICAGO, IL 60602
TEL: (312) 782-8150

USER NAME = USHC706648	DESIGNED - AKG	REVISED -	
	DRAWN - SSM	REVISED -	
PLOT SCALE = 40.000 ' / in.	CHECKED - KS	REVISED -	
PLOT DATE = 11/6/2025	DATE - 11/7/2025	REVISED -	

STATE OF ILLINOIS
DEPARTMENT OF TRANSPORTATION

PROPOSED DRAINAGE AND UTILITY PLAN
US-6

SCALE: 1"=20' | SHEET 3 OF 4 SHEETS | STA. TO STA.

F.A.I. RTE.	SECTION	COUNTY	TOTAL SHEETS	SHEET NO.
80	FAI 80 21 STRUCTURE 2	WILL	1230	348
		CONTRACT NO. 62R23		
		ILLINOIS	FED. AID PROJECT	

LEGEND

- PR. INLET
- PR. CATCH BASIN
- PR. MANHOLE
- PR. UNDERDRAIN HEADWALL
- PR. END SECTION
- PR. SWALE
- PR. DITCH
- PR. STORM SEWER
- PR. PIPE UNDERDRAIN
- PR. RIP RAP APRON
- XXXX PR. STRUCTURE
- XXXX PR. PIPE
- UC UTILITY CROSSING

0 20 40 60
SCALE IN FEET

MCDONOUGH STREET

EXIST R.O.W.

CSX RR

PROPOSED MANHOLE CONNECTION OVER EXISTING STORM SEWER

END IMPROVEMENT STA. 233+22.35

TEMPORARY SOIL RETENTION SYSTEM

10 YR TO 100 YR COMPENSATORY STORAGE:
TOTAL VOLUME NEEDED: 406.26 CU YD
TOTAL VOLUME PROVIDED: 483.90 CU YD
(FROM DS-2322 TO DS-2330)

NORMAL TO 10 YR COMPENSATORY STORAGE:
TOTAL VOLUME NEEDED: 111.21 CU YD
TOTAL VOLUME PROVIDED: 114.86 CU YD
(FROM DS-2322 TO DS-2330)

℄ US-6

MATCHLINE STA. 230+50.00

2321

US-6

231 232 233

2320 5.0' 2320 2319 5.0' 2319 2330

UC

2330

UTILITY CROSSING WITH FIBER OPTICS LINE; REFER TO ITS INFRASTRUCTURE PLANS FOR DETAILS

UC-7

UC

CITY OF JOLIET 12" WATERMAIN

EXIST R.O.W.

CITY OF JOLIET 8" WATERMAIN

2332

PROPOSED MANHOLE CONNECTION OVER EXISTING STORM SEWER

EXIST R.O.W.

EXIST R.O.W.

DS-2330
STA. 233+12, 10.1' LT
MAN TA 8 DIA T1F CL
RIM = 544.50
EX INV. = 539.09 (40"W - APPROXIMATELY)
INV. = 538.04 (24" S)
INV. = 538.04 (42" E)

DS-2332
STA. 233+46, 88.2' RT
MAN TA 8 DIA T1F CL
RIM = 542.68
INV. = 536.31 (42" W)
EX INV. = 539.21 (12" N)
EX INV. = 536.15 (36" E)

DS-2320
STA. 230+79, 14.5' LT
JUNCTION CHAMBER-3
RIM = 545.82
INV.= 538.27 (N, S)

DS-2319
STA. 231+99, 10.5' LT
JUNCTION CHAMBER-4
RIM = 545.82
INV.= 538.22 (N, S)

SS-2319
STORM SEW CL A 2 24
106' @ 0.17%
TBF = 91.8 CY

SS-2320
6'W X 2'H RCBC
(SPECIAL)
114' @ 0.05%
TBF = - CY

SS-2330
STORM SEW WM REQ 42
98' @ 1.77%
TBF = 61.9 CY

NOTES:

1. FOR PLACEMENT OF DRAINAGE STRUCTURE, SEE SHEET 383
2. FOR RIPRAP DETAILS, SEE SHEET 384
3. UC: PROPOSED STORM SEWER CONFLICT WITH PROPOSED CITY OF JOLIET UTILITIES; REFER TO JOLIET DRAINAGE AND UTILITY PLANS

US-6 UTILITY CROSSING TABLE

CROSSING NUMBER	LOCATION		PIPE INFORMATION			INVERT ELEVATION	OUTER ELEVATION	CLEARANCE (FEET)
	STATION	OFFSET	STATUS	SIZE	TYPE			
UC-7	223+31	36.3 RT	PR	42"	STORM	537.21	536.84	2.94
			PR	2"	GAS	533.73	533.90	

KEY PLAN

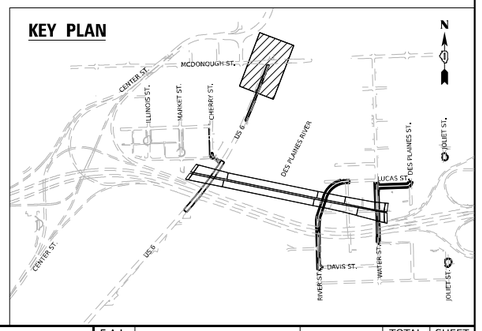

MODEL: Default
FILE NAME: pw://transystems-pw.bentley.com:transyscorp-pw1-hosted/Documents/Projects_2018/CH401/401180022/03-WSP/CAD/62R23-RB-1/Sheets/CivilD162R23-sht-drainplan13-2.dgn

WSP USA Inc.
30 N. LASALLE STREET
SUITE 4200
CHICAGO, IL 60602
TEL: (312) 782-8150

USER NAME = USHC706648	DESIGNED - AKG	REVISED -	
	DRAWN - SSM	REVISED -	
PLOT SCALE = 40.000 ' / in.	CHECKED - KS	REVISED -	
PLOT DATE = 11/6/2025	DATE - 11/7/2025	REVISED -	

STATE OF ILLINOIS
DEPARTMENT OF TRANSPORTATION

PROPOSED DRAINAGE AND UTILITY PLAN
US–6

SCALE: 1"=20' | SHEET 4 OF 4 SHEETS | STA. TO STA.

F.A.I. RTE.	SECTION	COUNTY	TOTAL SHEETS	SHEET NO.
80	FAI 80 21 STRUCTURE 2	WILL	1230	349
		CONTRACT NO. 62R23		
	ILLINOIS	FED. AID PROJECT		

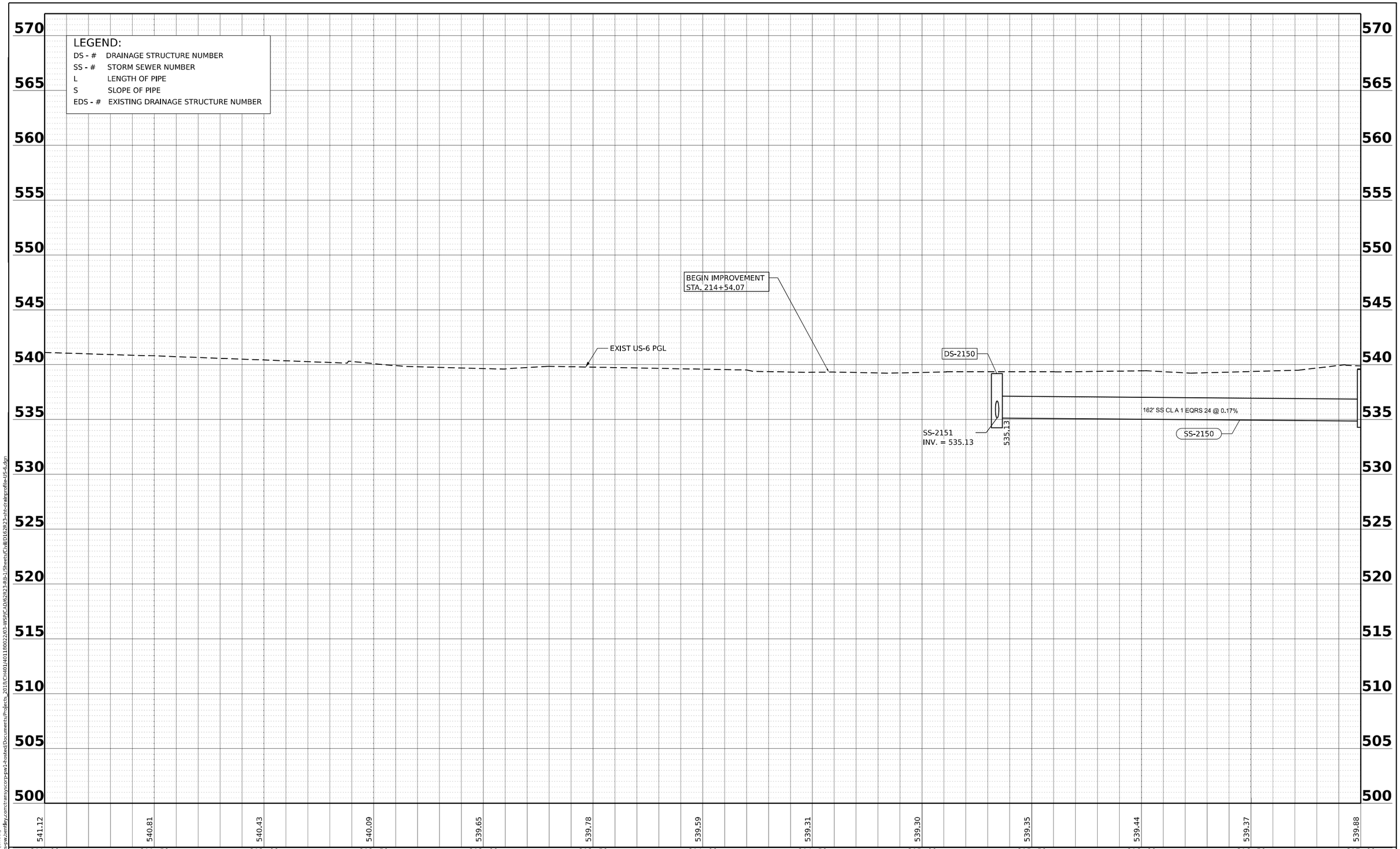

PLAN		BY	DATE
NOTE BOOK NO.____	SURVEYED		
	PLOTTED		
	ALIGNMENT CHECKED		
	RT. OF WAY CHECKED		
	CADD FILE NAME		

PROFILE		BY	DATE
NOTE BOOK NO.____	SURVEYED		
	PLOTTED		
	GRADES CHECKED		
	B.M. NOTED		
	STRUCTURE NOTATNS CHKD		

MODEL: US6_PrCL-3 - US6_3 [Sheet]
FILE NAME: pw://transystems-pw.bentley.com:transyscorp-pw1-hosted/Documents/Projects_2018/CH401/401180022/03-WSP/CAD/62R23-RB-1/Sheets/Civil/D162R23-sht-stratlprofile-US-6.dgn

WSP USA Inc.
30 N. LASALLE STREET
SUITE 4200
CHICAGO, IL 60602
TEL: (312) 782-8150

USER NAME = USHC706648	DESIGNED - AKG	REVISED -	
	DRAWN - SSM	REVISED -	
PLOT SCALE = 0.16666667 ' / in.	CHECKED - KS	REVISED -	
PLOT DATE = 11/6/2025	DATE - 11/7/2025	REVISED -	

STATE OF ILLINOIS
DEPARTMENT OF TRANSPORTATION

PROPOSED DRAINAGE AND UTILITY PROFILE
US–6

SCALE: HORIZ: 1"=50' VERT: 1"=5' | SHEET 1 OF 4 SHEETS | STA. TO STA.

F.A.I. RTE.	SECTION	COUNTY	TOTAL SHEETS	SHEET NO.
80	FAI 80 21 STRUCTURE 2	WILL	1230	350
		CONTRACT NO. 62R23		
	ILLINOIS	FED. AID PROJECT		

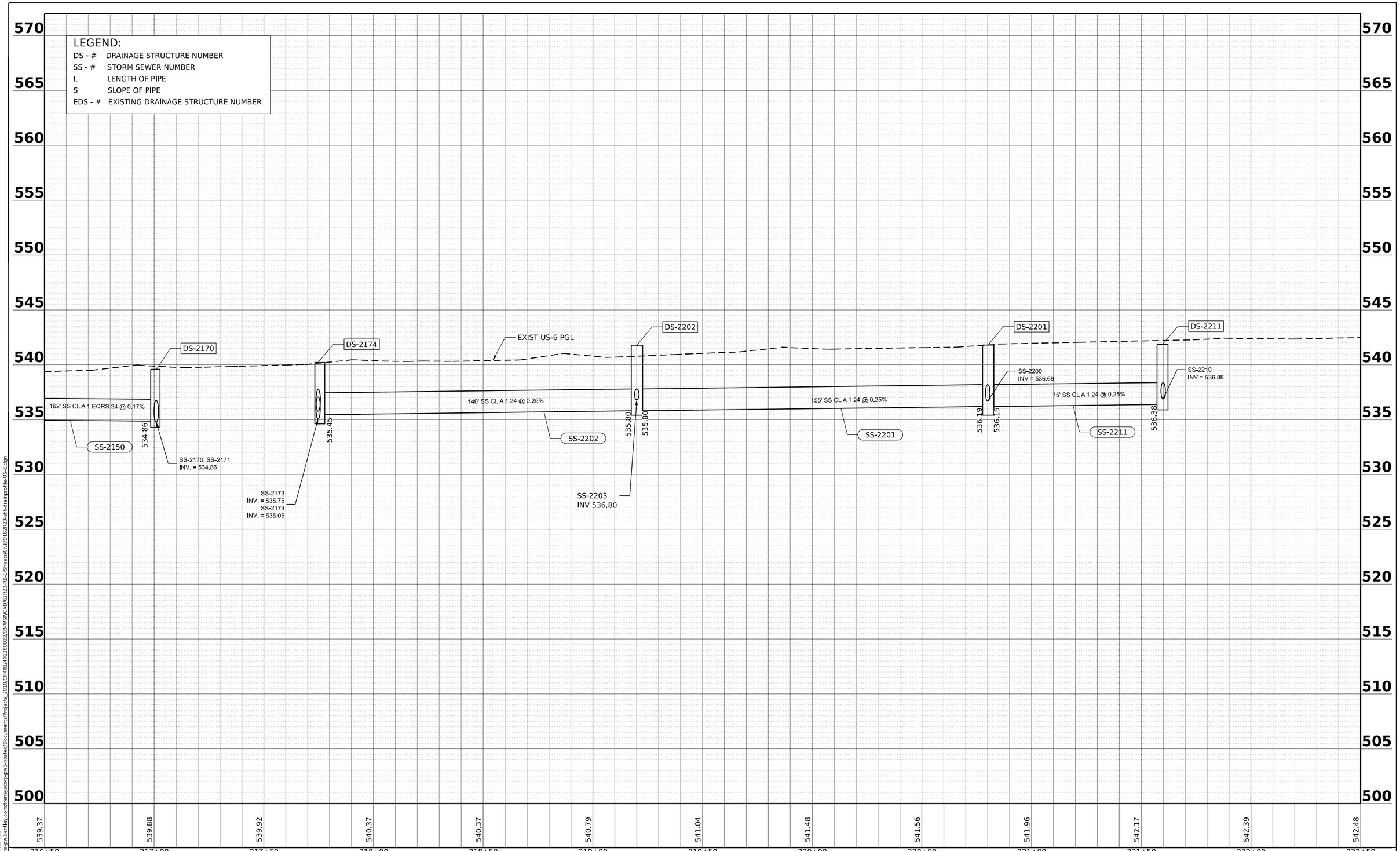

PLAN	BY	DATE
SURVEYED		
PLOTTED		
ALIGNMENT CHECKED		
RT. OF WAY CHECKED		
CADD FILE NAME		
NOTE BOOK NO.		

PROFILE	BY	DATE
SURVEYED		
PLOTTED		
GRADES CHECKED		
B.M. NOTED		
STRUCTURE NOTATNS CHKD		
NOTE BOOK NO.		

MODEL: I56_PrCL4 - I56_4 [Sheet]
FILE NAME: pw://transystems-pw.bentley.com:transyscorp-pw1-hosted/Documents/Projects_2018/CH401/401180022/03-WSP/CAD/62R23-RB-1/Sheets/Civil/D162R23-sht-draingprofile-US-6.dgn

WSP USA Inc.
30 N. LASALLE STREET
SUITE 4200
CHICAGO, IL 60602
TEL: (312) 782-8150

USER NAME = USHC706648	DESIGNED - AKG	REVISED -	
	DRAWN - SSM	REVISED -	
PLOT SCALE = 0.16666667 ' / in.	CHECKED - KS	REVISED -	
PLOT DATE = 11/6/2025	DATE - 11/7/2025	REVISED -	

STATE OF ILLINOIS
DEPARTMENT OF TRANSPORTATION

PROPOSED DRAINAGE AND UTILITY PROFILE
US–6

SCALE: HORIZ: 1"=50' VERT: 1"=5' | SHEET 2 OF 4 SHEETS | STA. TO STA.

F.A.I. RTE.	SECTION	COUNTY	TOTAL SHEETS	SHEET NO.
80	FAI 80 21 STRUCTURE 2	WILL	1230	351
		CONTRACT NO. 62R23		
	ILLINOIS	FED. AID PROJECT		

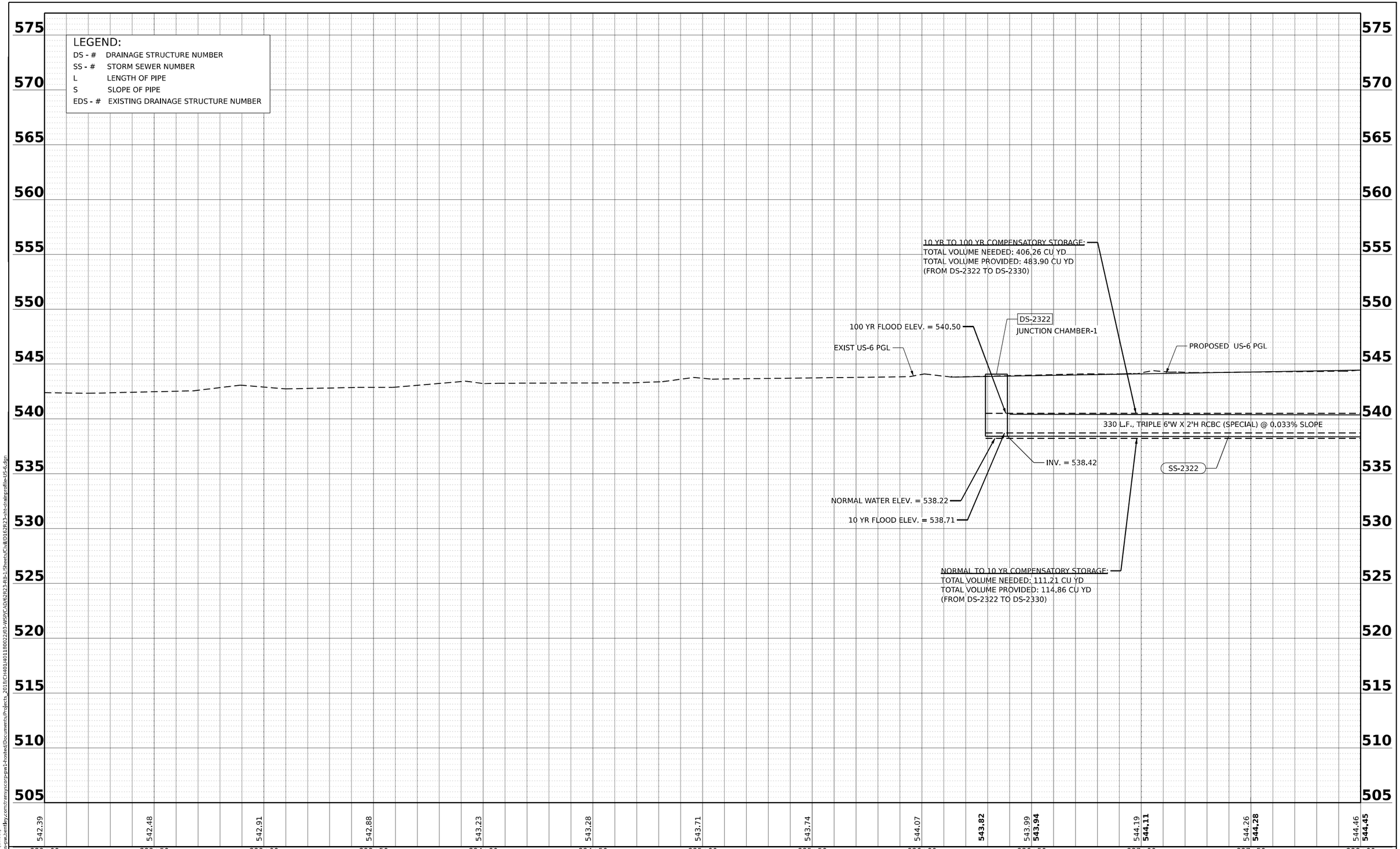

PLAN
NOTE BOOK NO.
SURVEYED
PLOTTED
ALIGNMENT CHECKED
RT. OF WAY CHECKED
CADD FILE NAME
BY
DATE

PROFILE
NOTE BOOK NO.
SURVEYED
PLOTTED
GRADES CHECKED
B.M. NOTED
STRUCTURE NOTATNS CHKD
BY
DATE

MODEL: US6_PrCL-5 - US6_5 (Sheet)
FILE NAME: pw://transystems-pw.bentley.com:transyscorp-pw1-hosted/Documents/Projects_2018/CH401/401180022/03-WSP/CAD/62R23-RB-1/Sheets/Civil/D162R23-sht-trainprofile-US-6.dgn

WSP USA Inc.
30 N. LASALLE STREET
SUITE 4200
CHICAGO, IL 60602
TEL: (312) 782-8150

USER NAME = USHC706648	DESIGNED - AKG	REVISED -
	DRAWN - SSM	REVISED -
PLOT SCALE = 0.16666667 ' / in.	CHECKED - KS	REVISED -
PLOT DATE = 11/6/2025	DATE - 11/7/2025	REVISED -

STATE OF ILLINOIS
DEPARTMENT OF TRANSPORTATION

PROPOSED DRAINAGE AND UTILITY PROFILE
US–6

SCALE: HORIZ: 1"=50' VERT: 1"=5' | SHEET 3 OF 4 SHEETS | STA. TO STA.

F.A.I. RTE.	SECTION	COUNTY	TOTAL SHEETS	SHEET NO.
80	FAI 80 21 STRUCTURE 2	WILL	1230	352
		CONTRACT NO. 62R23		
		ILLINOIS	FED. AID PROJECT	

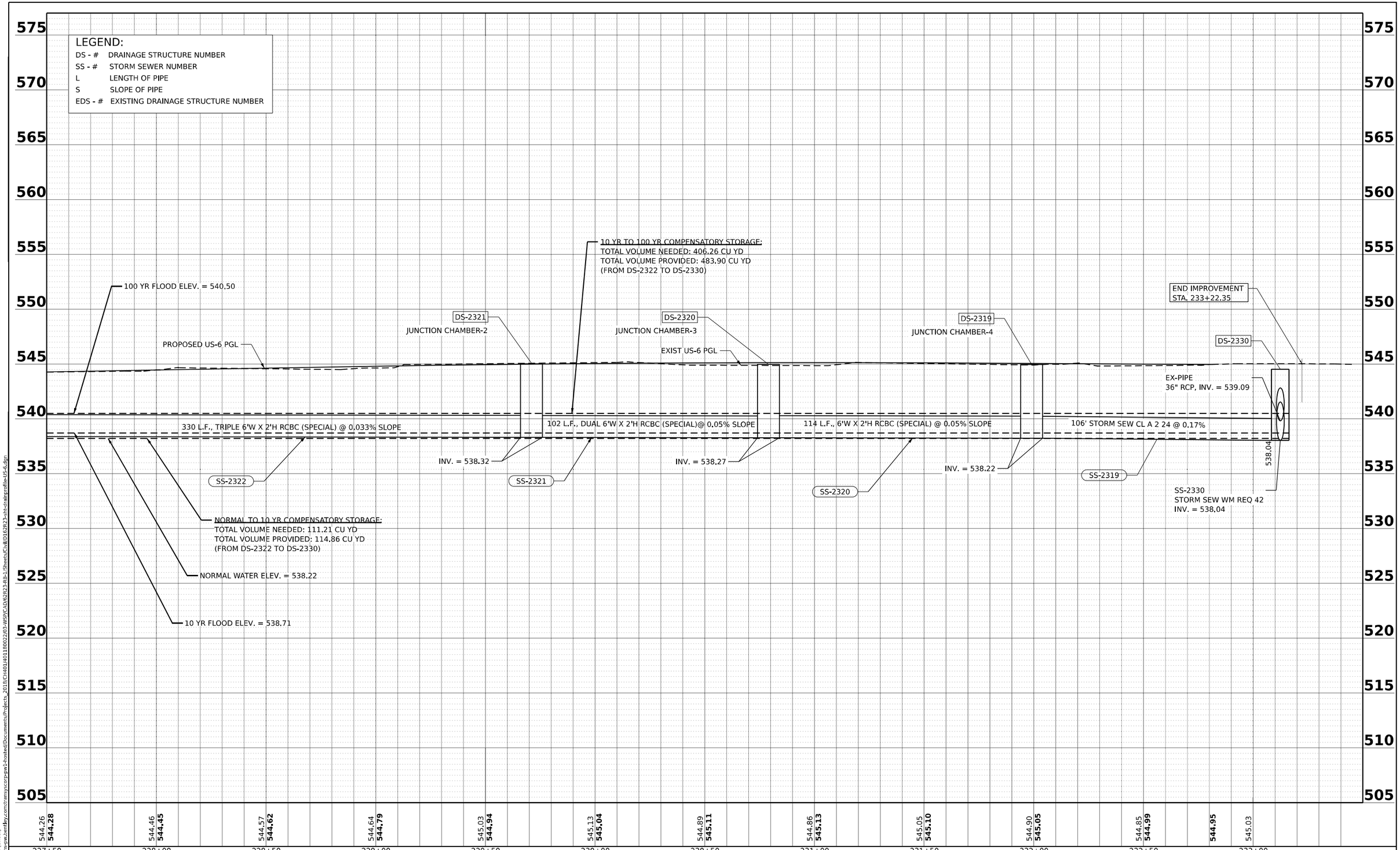

PLAN
NOTE BOOK NO.
SURVEYED
PLOTTED
ALIGNMENT CHECKED
RT. OF WAY CHECKED
CADD FILE NAME
BY
DATE

PROFILE
NOTE BOOK NO.
SURVEYED
PLOTTED
GRADES CHECKED
B.M. NOTED
STRUCTURE NOTATNS CHKD
BY
DATE

MODEL: US6_PrCL6 - US6_6 [Sheet]
FILE NAME: pw://transystems-pw.bentley.com:transyscorp-pw1-hosted/Documents/Projects_2018/CH401/401180022/03-WSP/CAD/62R23-RB-1/Sheets/Civil/D162R23-sht-drainprofile-US-6.dgn

WSP USA Inc.
30 N. LASALLE STREET
SUITE 4200
CHICAGO, IL 60602
TEL: (312) 782-8150

USER NAME = USHC706648	DESIGNED - AKG	REVISED -	
	DRAWN - SSM	REVISED -	
PLOT SCALE = 0.16666667 ' / in.	CHECKED - KS	REVISED -	
PLOT DATE = 11/6/2025	DATE - 11/7/2025	REVISED -	

STATE OF ILLINOIS
DEPARTMENT OF TRANSPORTATION

PROPOSED DRAINAGE AND UTILITY PROFILE
US–6

SCALE: HORIZ: 1"=50' VERT: 1"=5' | SHEET 4 OF 4 SHEETS | STA. TO STA.

F.A.I. RTE.	SECTION	COUNTY	TOTAL SHEETS	SHEET NO.
80	FAI 80 21 STRUCTURE 2	WILL	1230	353
		CONTRACT NO. 62R23		
		ILLINOIS	FED. AID PROJECT	

LEGEND

- PR. INLET
- PR. CATCH BASIN
- PR. MANHOLE
- PR. UNDERDRAIN HEADWALL
- PR. END SECTION
- PR. SWALE
- PR. DITCH
- PR. STORM SEWER
- PR. PIPE UNDERDRAIN
- PR. RIP RAP APRON
- XXXX PR. STRUCTURE
- XXXX PR. PIPE
- UC UTILITY CROSSING

NOTE: * FLAT SLAB TOP

*DS-1040
STA. 104+30, 4.4' LT
MAN TA 4 DIA T1F CL
RIM = 519.00
INV. = 515.61 (N)
INV. = 515.71 (W)
EX INV. = 515.61 (15" S)

DS-1041
STA. 104+30, 45.8' LT
CONC ES 542001 15 1:3
INV. = 516.00' (E)

*DS-1042
STA. 104+80, 10.8' LT
CB TA 4 DIA T11 F&G
RIM = 518.62
INV. = 515.75 (N, E)

*DS-1043
STA. 104+80, 12.1' RT
CB TA 5 DIA T1F OL
RIM = 518.64
INV. = 515.77 (W,N)

*DS-1045
STA. 104+80, 4.4 LT
CB TA 5 DIA T1F CL
RIM = 518.74
INV. = 515.73 (W, E, S)

*DS-1050
STA. 105+34, 18.6' RT
MAN TA 5 DIA T1F CL
RIM = 519.03
INV. = 515.93 (W,N,S)

DS-1052
STA. 105+34, 12.6' RT
CB TC 2 DIA T11 F&G
RIM = 518.45
INV. = 515.95 (E)

DS-1053
STA. 105+34, 13.4' LT
CB TC 2 DIA T11 F&G
RIM = 518.45
INV. = 516.00 (S)

SS-1041
STORM SEW WM REQ 15
32' @ 1.00%
TBF = 0.4 CY

SS-1042
STORM SEW CL A 5 12
3' @ 0.67%
TBF = 0.3 CY

SS-1043
STORM SEW CL A 1 EQRS 15
12' @ 0.33%
TBF = 0.8 CY

SS-1045
STORM SEW CL A 1 EQRS 18
45' @ 0.27%
TBF = 4.1 CY

SS-1050
STORM SEW CL A 1 EQRS 15
50' @ 0.32%
TBF = 0 CY

SS-1052
STORM SEW CL A 1 12
1.8' @ 0.6%
TBF = 0 CY

SS-1053
STORM SEW WM REQ 12
50' @ 0.50%
TBF = 0 CY

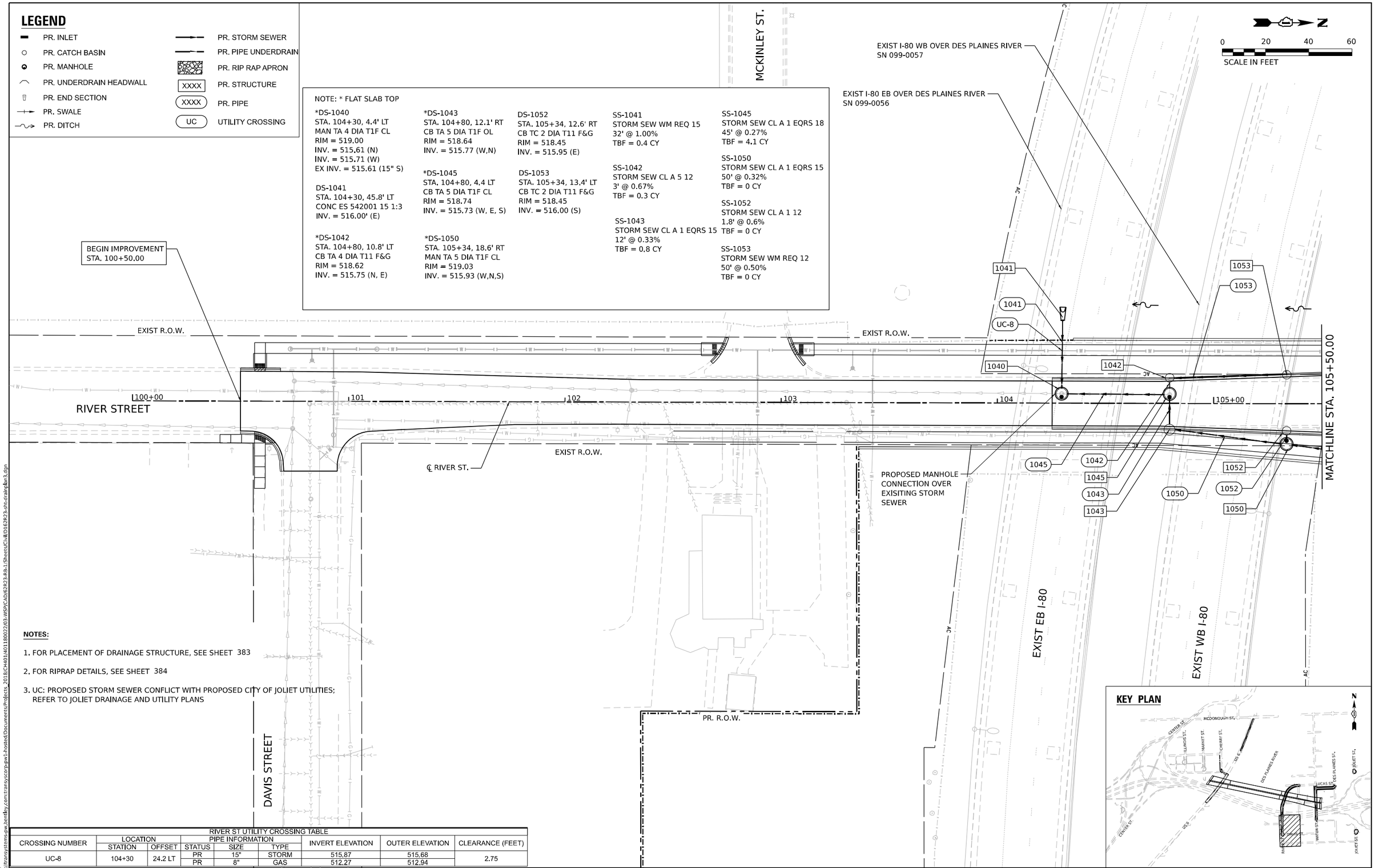

NOTES:

1. FOR PLACEMENT OF DRAINAGE STRUCTURE, SEE SHEET 383
2. FOR RIPRAP DETAILS, SEE SHEET 384
3. UC: PROPOSED STORM SEWER CONFLICT WITH PROPOSED CITY OF JOLIET UTILITIES; REFER TO JOLIET DRAINAGE AND UTILITY PLANS

RIVER ST UTILITY CROSSING TABLE

CROSSING NUMBER	LOCATION		PIPE INFORMATION			INVERT ELEVATION	OUTER ELEVATION	CLEARANCE (FEET)
	STATION	OFFSET	STATUS	SIZE	TYPE			
UC-8	104+30	24.2 LT	PR	15"	STORM	515.87	515.68	2.75
			PR	8"	GAS	512.27	512.94	

WSP USA Inc.
30 N. LASALLE STREET
SUITE 4200
CHICAGO, IL 60602
TEL: (312) 782-8150

USER NAME = USHC706648	DESIGNED - AKG	REVISED -	
	DRAWN - SSM	REVISED -	
PLOT SCALE = 40.000 ' / in.	CHECKED - KS	REVISED -	
PLOT DATE = 11/6/2025	DATE - 11/7/2025	REVISED -	

STATE OF ILLINOIS
DEPARTMENT OF TRANSPORTATION

PROPOSED DRAINAGE AND UTILITY PLAN
RIVER STREET

SCALE: 1"=20' | SHEET 1 OF 2 SHEETS | STA. TO STA.

F.A.I. RTE.	SECTION	COUNTY	TOTAL SHEETS	SHEET NO.
80	FAI 80 21 STRUCTURE 2	WILL	1230	354
		CONTRACT NO. 62R23		
	ILLINOIS	FED. AID PROJECT		

MODEL: Default
FILE NAME: pw://transystems@pw.bentley.com:transyscorp-pw1-hosted/Documents/Projects_2018/CH401/401180022/03-WSP/CAD/62R23-RB-1/Sheets/Civil/0162R23-sht-drainplan3.dgn

LEGEND

- PR. INLET
- PR. CATCH BASIN
- PR. MANHOLE
- PR. UNDERDRAIN HEADWALL
- PR. END SECTION
- PR. SWALE
- PR. DITCH
- PR. STORM SEWER
- PR. PIPE UNDERDRAIN
- PR. RIP RAP APRON
- XXXX PR. STRUCTURE
- XXXX PR. PIPE
- UC UTILITY CROSSING

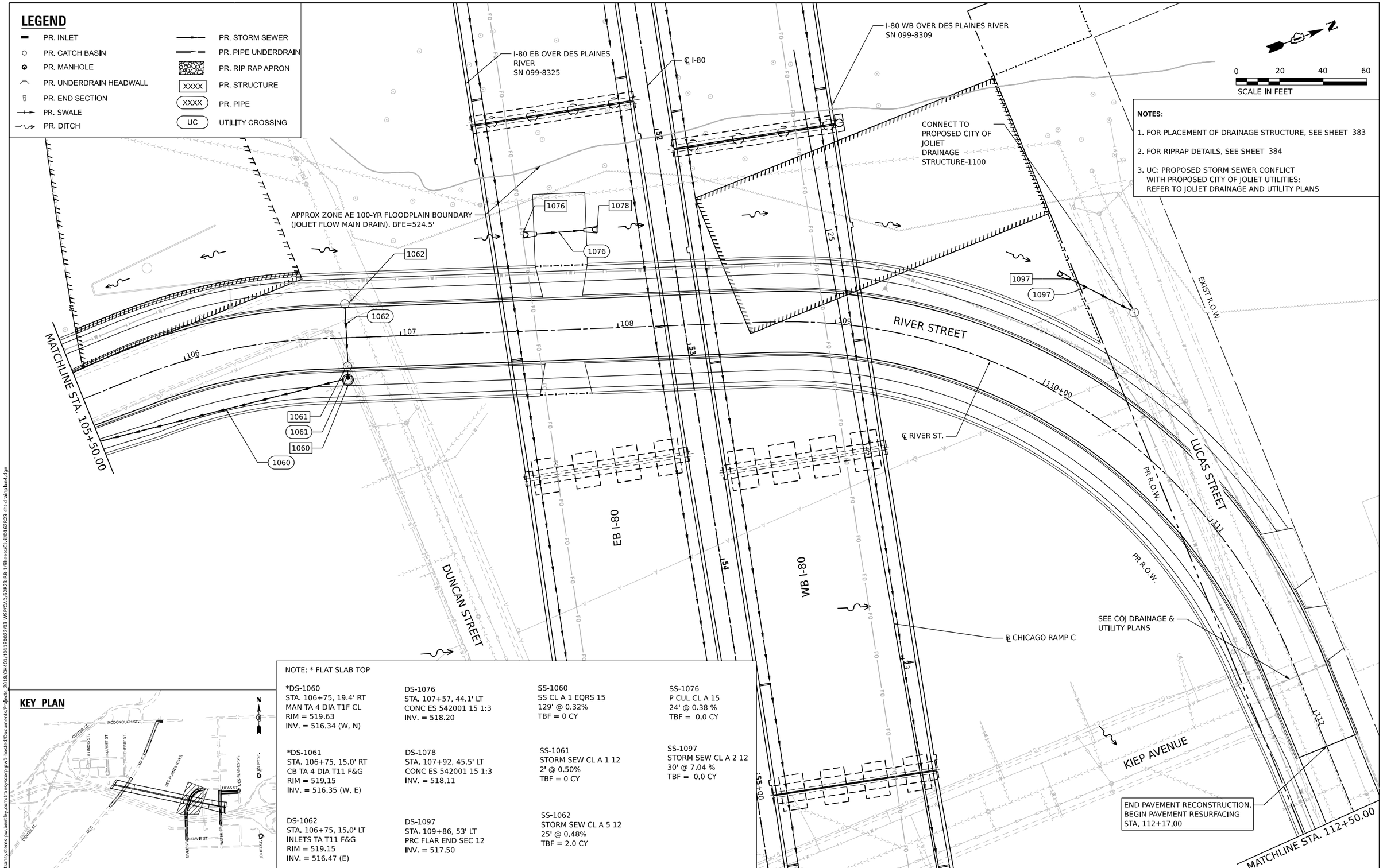

NOTES:

1. FOR PLACEMENT OF DRAINAGE STRUCTURE, SEE SHEET 383
2. FOR RIPRAP DETAILS, SEE SHEET 384
3. UC: PROPOSED STORM SEWER CONFLICT WITH PROPOSED CITY OF JOLIET UTILITIES; REFER TO JOLIET DRAINAGE AND UTILITY PLANS

NOTE: * FLAT SLAB TOP

*DS-1060
STA. 106+75, 19.4' RT
MAN TA 4 DIA T1F CL
RIM = 519.63
INV. = 516.34 (W, N)

*DS-1061
STA. 106+75, 15.0' RT
CB TA 4 DIA T11 F&G
RIM = 519.15
INV. = 516.35 (W, E)

DS-1062
STA. 106+75, 15.0' LT
INLETS TA T11 F&G
RIM = 519.15
INV. = 516.47 (E)

DS-1076
STA. 107+57, 44.1' LT
CONC ES 542001 15 1:3
INV. = 518.20

DS-1078
STA. 107+92, 45.5' LT
CONC ES 542001 15 1:3
INV. = 518.11

DS-1097
STA. 109+86, 53' LT
PRC FLAR END SEC 12
INV. = 517.50

SS-1060
SS CL A 1 EQRS 15
129' @ 0.32%
TBF = 0 CY

SS-1061
STORM SEW CL A 1 12
2' @ 0.50%
TBF = 0 CY

SS-1062
STORM SEW CL A 5 12
25' @ 0.48%
TBF = 2.0 CY

SS-1076
P CUL CL A 15
24' @ 0.38 %
TBF = 0.0 CY

SS-1097
STORM SEW CL A 2 12
30' @ 7.04 %
TBF = 0.0 CY

KEY PLAN

WSP USA Inc.
30 N. LASALLE STREET
SUITE 4200
CHICAGO, IL 60602
TEL: (312) 782-8150

USER NAME = USHC706648	DESIGNED - AKG	REVISED -	
	DRAWN - SSM	REVISED -	
PLOT SCALE = 40.000 ' / in.	CHECKED - KS	REVISED -	
PLOT DATE = 11/6/2025	DATE - 11/7/2025	REVISED -	

STATE OF ILLINOIS
DEPARTMENT OF TRANSPORTATION

PROPOSED DRAINAGE AND UTILITY PLAN
RIVER STREET

SCALE: 1"=20' | SHEET 2 OF 2 SHEETS | STA. | TO STA.

F.A.I. RTE.	SECTION	COUNTY	TOTAL SHEETS	SHEET NO.
80	FAI 80 21 STRUCTURE 2	WILL	1230	355
		CONTRACT NO. 62R23		
	ILLINOIS	FED. AID PROJECT		

MODEL: Default
FILE NAME: pw://transystems-pw.bentley.com:transyscorp-pw1-hosted/Documents/Projects_2018/C-4401/401180022/03-WSP/CAD/62R23-RB-1/Sheets/Civil/D162R23-sht-drainplan4.dgn

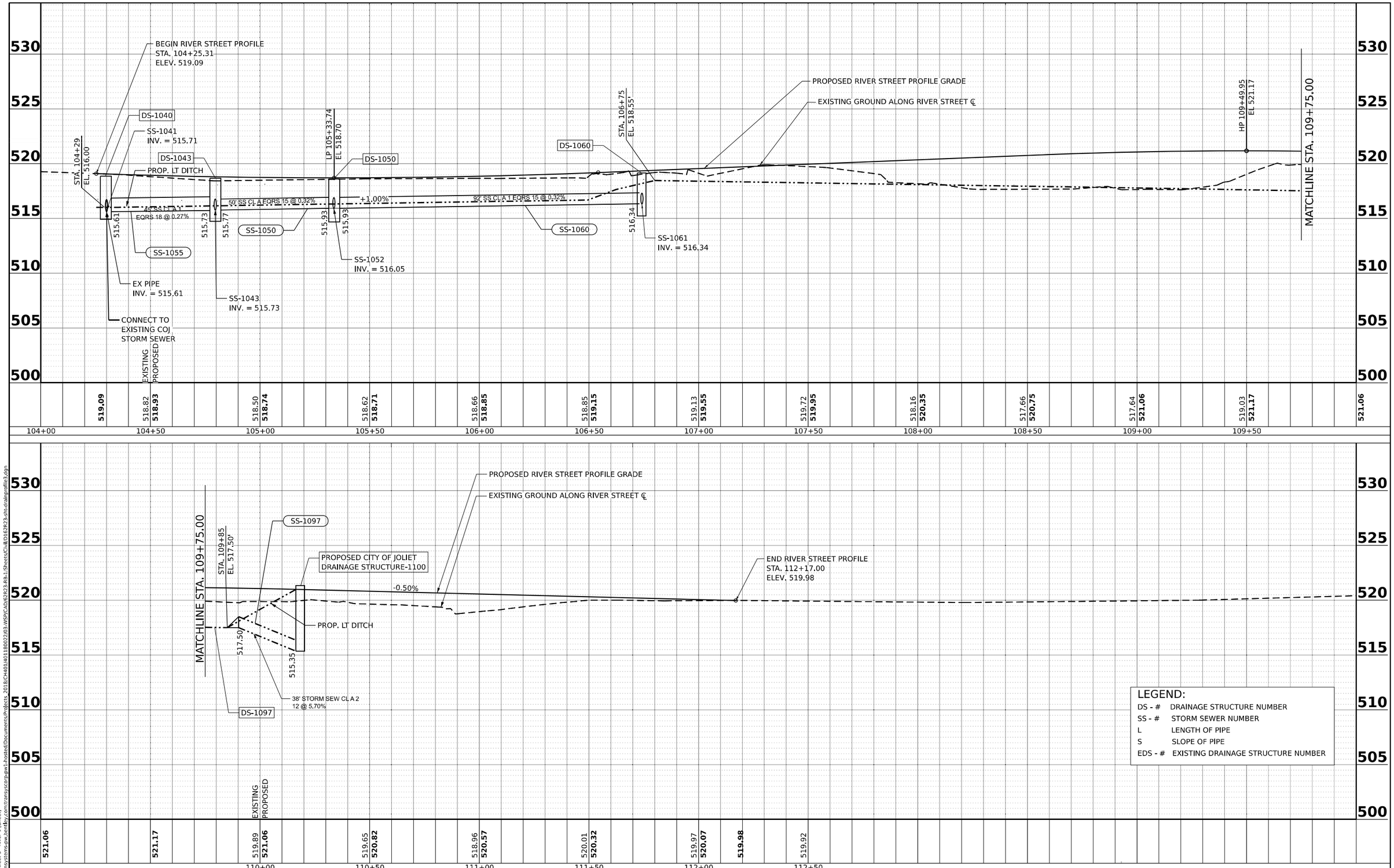

MODEL: PICL_RiverStreet-3 - River-1 [Sheet]
FILE NAME: pw://transystems-pw.bentley.com:transyscorp-pw1-hosted/Documents/Projects_2018/CH401/401180022/03-WSP/CAD/62R23-RB-1/Sheets/Civil/0162R23-sht-drainprofile3.dgn

WSP USA Inc.
30 N. LASALLE STREET
SUITE 4200
CHICAGO, IL 60602
TEL: (312) 782-8150

USER NAME = USHC706648	DESIGNED - AKG	REVISED -	
	DRAWN - SSM	REVISED -	
PLOT SCALE = 0.16666667 ' / in.	CHECKED - KS	REVISED -	
PLOT DATE = 11/6/2025	DATE - 11/7/2025	REVISED -	

STATE OF ILLINOIS
DEPARTMENT OF TRANSPORTATION

PROPOSED DRAINAGE AND UTILITY PROFILE
RIVER STREET

SCALE: HORIZ: 1"=20' VERT: 1"=5' | SHEET 1 OF 1 SHEETS | STA. TO STA.

F.A.I. RTE.	SECTION	COUNTY	TOTAL SHEETS	SHEET NO.
80	FAI 80 21 STRUCTURE 2	WILL	1230	356
		CONTRACT NO. 62R23		
		ILLINOIS	FED. AID PROJECT	

LEGEND

- PR. INLET
- PR. CATCH BASIN
- PR. MANHOLE
- PR. UNDERDRAIN HEADWALL
- PR. END SECTION
- PR. SWALE
- PR. DITCH
- PR. STORM SEWER
- PR. PIPE UNDERDRAIN
- PR. RIP RAP APRON
- XXXX PR. STRUCTURE
- XXXX PR. PIPE
- UC UTILITY CROSSING

*DS-4000 STA. 400+70, 15.6 RT CB TA 4 DIA T11 F&G RIM = 519.93 INV. = 517.17 (E, N)	DS-4001 STA. 400+70, 15.0' LT INLETS TA T11 F&G RIM = 520.15 INV. = 517.42 (S)	DS-4021 STA. 402+50, 15.0' LT INLETS TA T11 F&G RIM = 523.36 INV. = 520.01 (S)	SS-4000 SS CL A 1 EQRS 15 24' @ 0.33% TBF = 1.6 CY	SS-4010 STORM SEW CL A 2 15 30' @ 0.33% TBF = 0.0 CY	SS-4021 STORM SEW WM REQ 12 25' @ 1.03% TBF = 15.0 CY
*DS-4010 STA. 400+98, 15.6' RT CB TA 4 DIA T11 F&G RIM = 520.08 INV. = 517.09 (W) INV. = 517.09 (E) INV. = 517.09 (S)	*DS-4020 STA. 402+50, 15.6' RT CB TA 4 DIA T11 F&G RIM = 523.36 INV. = 517.58 (W) INV. = 519.76 (N)	*DS-1030 STA. 113+59, 49.2' RT CB TA 4 DIA T8G RIM = 518.00 INV. = 513.84 (N)	SS-4001 STORM SEW WM REQ 12 27' @ 0.94% TBF = 1.9 CY	SS-4020 STORM SEW CL A 1 15 149' @ 0.33% TBF = 36.1 CY	SS-1030 STORM SEW WM REQ 12 31' @ 1.21 % TBF = 0.0 CY

NOTE: * FLAT SLAB TOP

N

0 20 40 60
SCALE IN FEET

END ROADWAY IMPROVEMENT STA. 308+55.00

℄ WATER ST.

EXIST R.O.W.

APPROX ZONE AE 100-YR FLOODPLAIN BOUNDARY (JOLIET FLOW MAIN DRAIN). BFE=524.5'

END IMPROVEMENT STA. 403+96.54

PR R.O.W.

LUCAS STREET

115+00

309

308

405+00

DES PLAINES STREET

404

PR R.O.W.

℄ LUCAS/DES PLAINES STREET

CONNECT TO PROPOSED CITY OF JOLIET DRAINAGE STRUCTURE-ST3

1030

1030

4001

UC

4021

UC

BEGIN IMPROVEMENT STA. 400+11.65

400+00

401

402

403

4001

LUCAS STREET

UC

4010

UC

4021

4000

4000

4020

4020

LUCAS STREET STA. 400+00.00= WATER STREET STA. 307+43.73

4010

307

CONNECT TO DS-1800 (SEE I-80 PROPOSED DRAINAGE PLANS)

WATER STREET

306

℄ CHICAGO RAMP C

I-80 WB OVER DES PLAINES RIVER SN 099-8309

20

19

18

NOTES:

1. FOR PLACEMENT OF DRAINAGE STRUCTURE, SEE SHEET 383
2. FOR RIPRAP DETAILS, SEE SHEET 384
3. UC: PROPOSED STORM SEWER CONFLICT WITH PROPOSED CITY OF JOLIET UTILITIES; REFER TO JOLIET DRAINAGE AND UTILITY PLANS

KEY PLAN

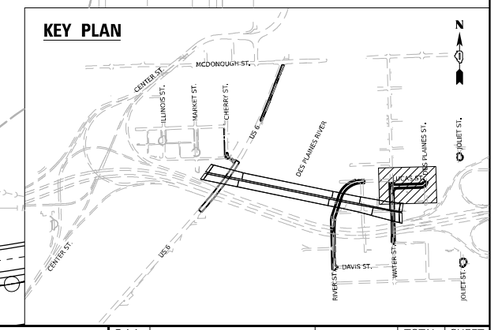

MODEL: Default
FILE NAME: pw://transystems-pw.bentley.com:transyscorp-pw1-hosted/Documents/Projects_2018/CH401/401180022/03-WSP/CAD/62R23-RB-1/Sheets/Civil/0162R23-sht-drainplan16.dgn

WSP USA Inc.
30 N. LASALLE STREET
SUITE 4200
CHICAGO, IL 60602
TEL: (312) 782-8150

USER NAME = USHC706648	DESIGNED - AKG	REVISED -	
	DRAWN - SSM	REVISED -	
PLOT SCALE = 40.000 ' / in.	CHECKED - KS	REVISED -	
PLOT DATE = 11/6/2025	DATE - 11/7/2025	REVISED -	

STATE OF ILLINOIS
DEPARTMENT OF TRANSPORTATION

PROPOSED DRAINAGE AND UTILITY PLAN
LUCAS STREET

SCALE: 1"=20' | SHEET 1 OF 1 SHEETS | STA. TO STA.

F.A.I. RTE.	SECTION	COUNTY	TOTAL SHEETS	SHEET NO.
80	FAI 80 21 STRUCTURE 2	WILL	1230	357
		CONTRACT NO. 62R23		
		ILLINOIS	FED. AID PROJECT	

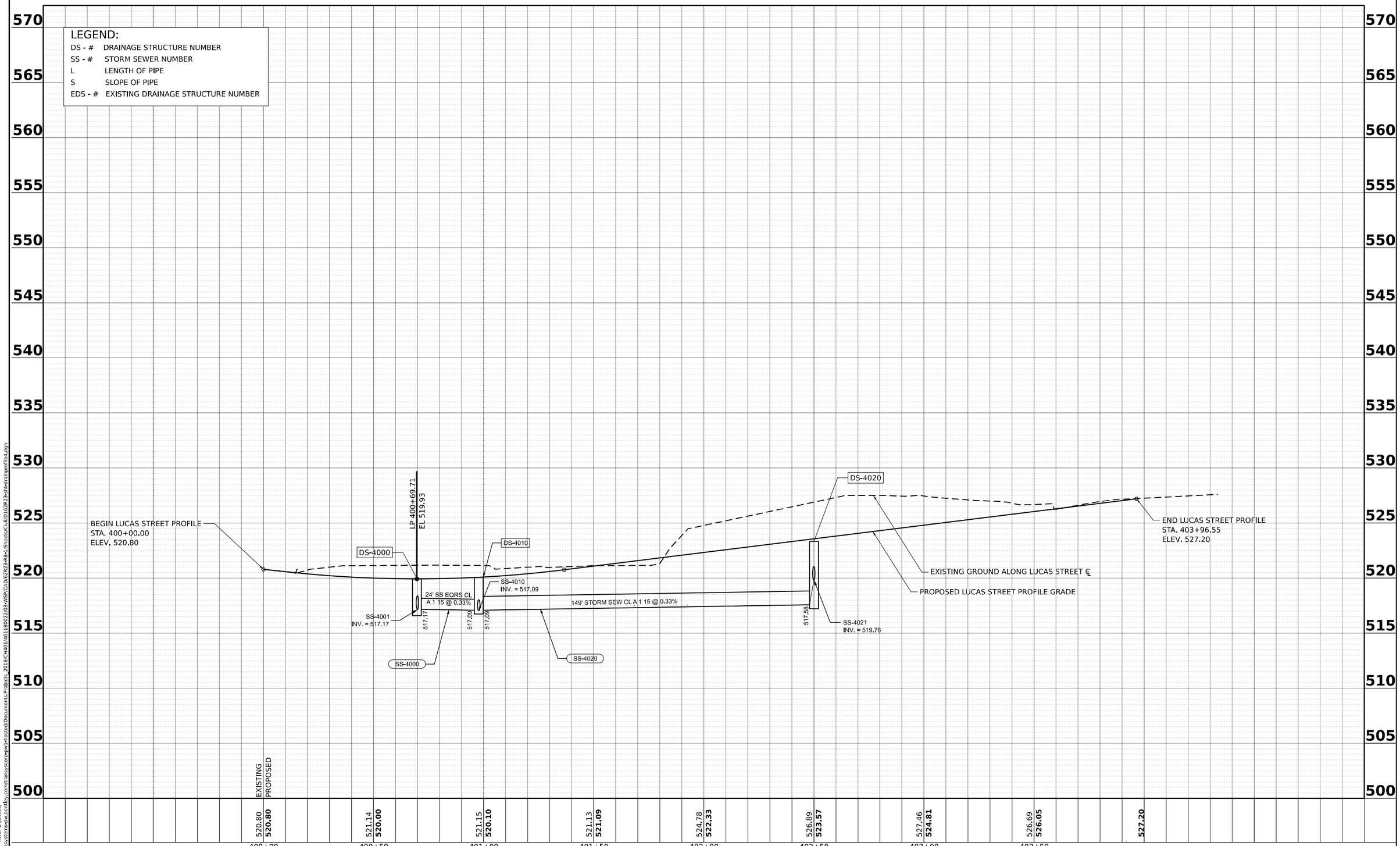

MODEL: LUCAS_PrCL - Rivet-2 [Sheet]
FILE NAME: pw://transystems-pw.bentley.com:transyscorp-pw1-Hosted/Documents/Projects_2018/CH401/401180022/03-WSP/CAD/62R23-RB-1/Sheets/Civil/D162R23-sht-drainprofile4.dgn

WSP USA Inc.
30 N. LASALLE STREET
SUITE 4200
CHICAGO, IL 60602
TEL: (312) 782-8150

USER NAME = USHC706648	DESIGNED - AKG	REVISED -	
	DRAWN - SSM	REVISED -	
PLOT SCALE = 0.16666667 ' / in.	CHECKED - KS	REVISED -	
PLOT DATE = 11/6/2025	DATE - 11/7/2025	REVISED -	

STATE OF ILLINOIS
DEPARTMENT OF TRANSPORTATION

PROPOSED DRAINAGE AND UTILITY PROFILE
LUCAS STREET

SCALE: HORIZ: 1"=20' VERT: 1"=5' | SHEET 1 OF 1 SHEETS | STA. TO STA.

F.A.I. RTE.	SECTION	COUNTY	TOTAL SHEETS	SHEET NO.
80	FAI 80 21 STRUCTURE 2	WILL	1230	358
		CONTRACT NO. 62R23		
		ILLINOIS	FED. AID PROJECT	

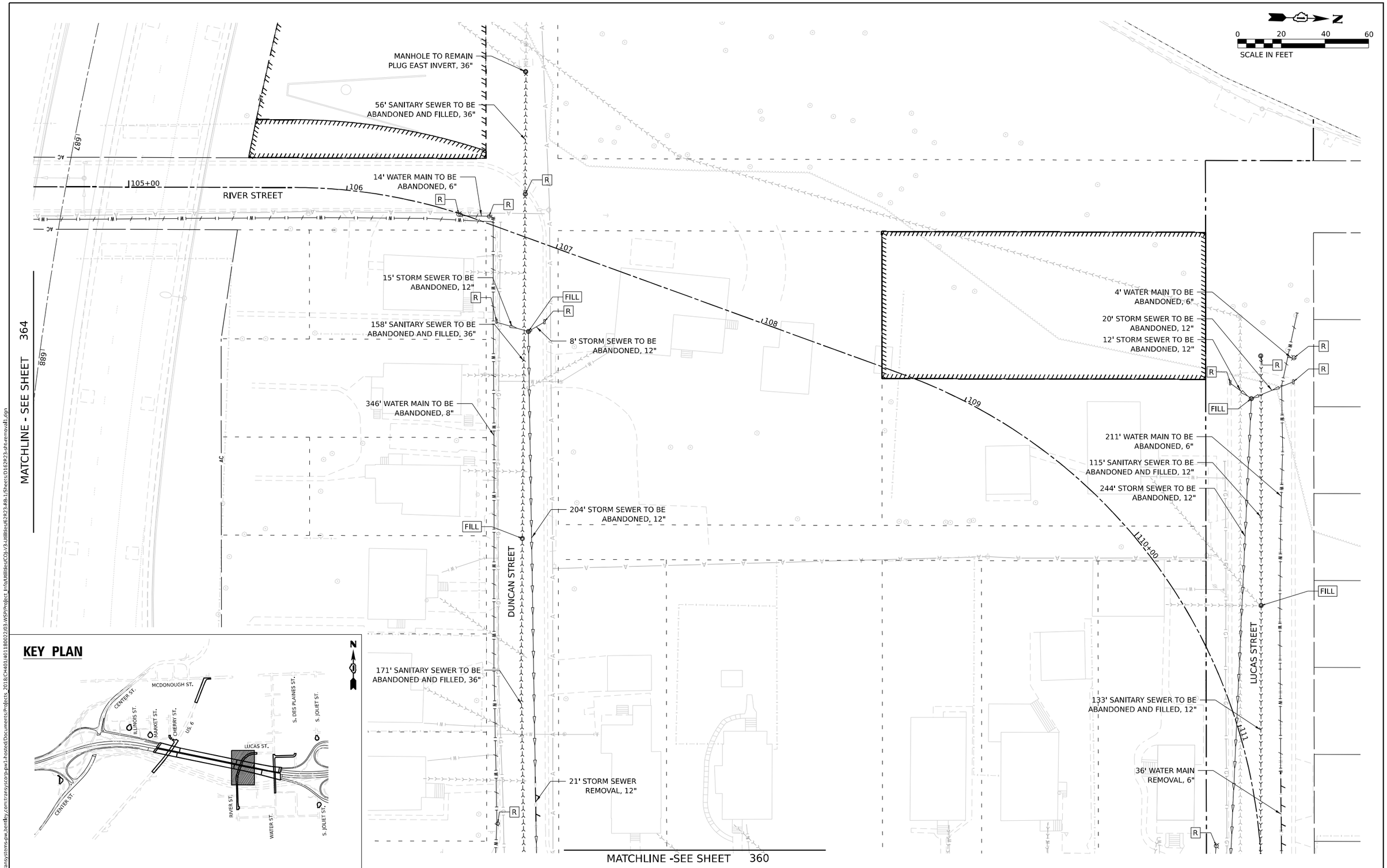

MODEL: Default
FILE NAME: pw://transystems-pw.bentley.com:transyscorp-pw1-hosted/Documents/Projects_2018/CH401401180022/03-WSP/Project_Info/Utilities/CO-V3-Utilities/62R23-RB-1/Sheets/0162R23-sht-removal1.dgn

V3 Companies
7325 Janes Avenue
Woodridge, IL 60517
630.724.9200 phone
630.724.9202 fax
www.v3co.com

USER NAME = dpung	DESIGNED - CD	REVISED -	
	DRAWN - DP	REVISED -	
PLOT SCALE =	CHECKED - JH	REVISED -	
PLOT DATE = 11/6/2025	DATE - 11/7/2025	REVISED -	

STATE OF ILLINOIS
DEPARTMENT OF TRANSPORTATION

JOLIET UTILITY REMOVAL PLAN

SCALE: 1"=20' | SHEET 1 OF 9 SHEETS | STA. TO STA.

F.A.I. RTE.	SECTION	COUNTY	TOTAL SHEETS	SHEET NO.
80	FAI 80 21 STRUCTURE 2	WILL	1230	359
		CONTRACT NO. 62R23		
	ILLINOIS	FED. AID PROJECT		

MATCHLINE - SEE SHEET 359

10' SANITARY SEWER TO BE ABANDONED AND FILLED, 8"
50' STORM SEWER TO BE ABANDONED, 12"
22' STORM SEWER TO BE ABANDONED, 12"
10' SANITARY SEWER TO BE ABANDONED AND FILLED, 8"
217' SANITARY SEWER TO BE ABANDONED AND FILLED, 12"
182' SANITARY SEWER TO BE ABANDONED AND FILLED, 12"
360' WATER MAIN TO BE ABANDONED, 6"
155' SANITARY SEWER TO BE ABANDONED AND FILLED, 12"
26' STORM SEWER TO BE ABANDONED, 12"
21' WATER MAIN TO BE ABANDONED, 6"
7' SANITARY SEWER REMOVAL, 12"
KIEP AVENUE
KIEP AVENUE
184' STORM SEWER TO BE ABANDONED, 12"
10' SANITARY SEWER TO BE ABANDONED AND FILLED, 8"
234' STORM SEWER TO BE ABANDONED, 15"
4' STORM SEWER TO BE ABANDONED, 12"
7' SANITARY SEWER TO BE ABANDONED AND FILLED, 8"
46' STORM SEWER TO BE ABANDONED, 12"
82' STORM SEWER TO BE ABANDONED, 18"
9' WATER MAIN TO BE ABANDONED, 6"
73' STORM SEWER TO BE ABANDONED, 18"
89' STORM SEWER TO BE ABANDONED, 12"
97' SANITARY SEWER TO BE ABANDONED AND FILLED, 12"
139' SANITARY SEWER TO BE ABANDONED AND FILLED, 12"
67' WATER MAIN TO BE ABANDONED, 8"

KEY PLAN

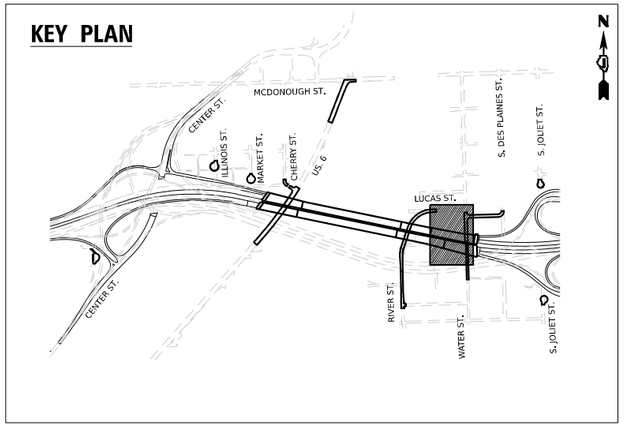

26' WATER MAIN REMOVAL, 8"
26' SANITARY SEWER REMOVAL, 36"
26' STORM SEWER REMOVAL, 12"
20' STORM SEWER TO BE ABANDONED, 15"
198' WATER MAIN TO BE ABANDONED, 6"
70' STORM SEWER TO BE ABANDONED, 15"
43' SANITARY SEWER TO BE ABANDONED AND FILLED, 36"
35' STORM SEWER TO BE ABANDONED, 12"
9' STORM SEWER TO BE ABANDONED, 12"
6' STORM SEWER REMOVAL, 15"
6' STORM SEWER REMOVAL, 15"
6' WATER MAIN REMOVAL, 6"
14' STORM SEWER TO BE ABANDONED, 12"
130' WATER MAIN TO BE ABANDONED, 8"
DUNCAN STREET
LUCAS STREET
24' STORM SEWER REMOVAL, 15"
102' STORM SEWER TO BE ABANDONED, 15"
118' WATER MAIN TO BE ABANDONED, 6"
85' SANITARY SEWER TO BE ABANDONED AND FILLED, 36"
26' WATER MAIN REMOVAL, 8"
26' SANITARY SEWER REMOVAL, 36"
16' STORM SEWER TO BE ABANDONED, 15"
46' WATER MAIN REMOVAL, 6"
40' STORM SEWER REMOVAL, 24"
28' STORM SEWER REMOVAL, 15"
28' WATER MAIN TO BE ABANDONED, 6"
55' WATER MAIN TO BE ABANDONED, 8"
46' SANITARY SEWER TO BE ABANDONED AND FILLED, 36"
110' STORM SEWER REMOVAL, 12"
24' STORM SEWER REMOVAL, 12"
12' WATER MAIN REMOVAL, 8"
5' SANITARY SEWER REMOVAL, 36"
219' WATER MAIN TO BE ABANDONED, 8"
149' SANITARY SEWER REMOVAL, 30"
SANITARY MANHOLE TO BE ADJUSTED
187' SANITARY SEWER REMOVAL, 30"
303
304
305+00
306
307
308
WATER STREET
91' WATER MAIN REMOVAL, 8"
344' WATER MAIN REMOVAL, 8"
9' SANITARY SEWER REMOVAL, 30"
57' WATER MAIN REMOVAL, 8"
39' WATER MAIN REMOVAL, 6"
693
694
AC
112
113
114
115

0 20 40 60
SCALE IN FEET

MATCHLINE SEE SHEET 3 OF 11

MATCHLINE - SEE SHEET 364

MODEL: Default
FILE NAME: pw://transystems-pw.bentley.com:transyscorp-pw1-hosted/Documents/Projects_2018/CH401/401180022/03-WSP/Project_Info/Utilities/CO-V3-Utilities/62R23-RB-1/Sheets/D162R23-sht-removal2.dgn

V3 Companies
7325 Janes Avenue
Woodridge, IL 60517
630.724.9200 phone
630.724.9202 fax
www.v3co.com

USER NAME = dpung	DESIGNED - CD	REVISED -	
	DRAWN - DP	REVISED -	
PLOT SCALE =	CHECKED - JH	REVISED -	
PLOT DATE = 11/6/2025	DATE - 11/7/2025	REVISED -	

STATE OF ILLINOIS
DEPARTMENT OF TRANSPORTATION

JOLIET UTILITY REMOVAL PLAN

SCALE: 1"=20' | SHEET 2 OF 9 SHEETS | STA. TO STA.

F.A.I. RTE.	SECTION	COUNTY	TOTAL SHEETS	SHEET NO.
80	FAI 80 21 STRUCTURE 2	WILL	1230	360
		CONTRACT NO. 62R23		
		ILLINOIS	FED. AID PROJECT	

MATCHLINE - SEE SHEET 362

MATCHLINE - SEE SHEET 360

DUNCAN STREET

FILL

122' SANITARY SEWER TO BE ABANDONED AND FILLED, 12"

30' STORM SEWER TO BE ABANDONED, 12"

147' SANITARY SEWER TO BE ABANDONED AND FILLED, 24"

398' STORM SEWER TO BE ABANDONED, 12"

168' SANITARY SEWER TO BE ABANDONED AND FILLED, 30"

187' SANITARY SEWER TO BE ABANDONED AND FILLED, 18"

646' WATER MAIN TO BE ABANDONED, 12"

646' WATER MAIN TO BE ABANDONED, 12"

400' SANITARY SEWER TO BE ABANDONED AND FILLED, 15"

695+00 696 697 698 699 700+00

20+00

1 2 3 16 17 18 19 21

N

0 20 40 60

SCALE IN FEET

MATCHLINE SEE SHEET 7 OF 11

KEY PLAN

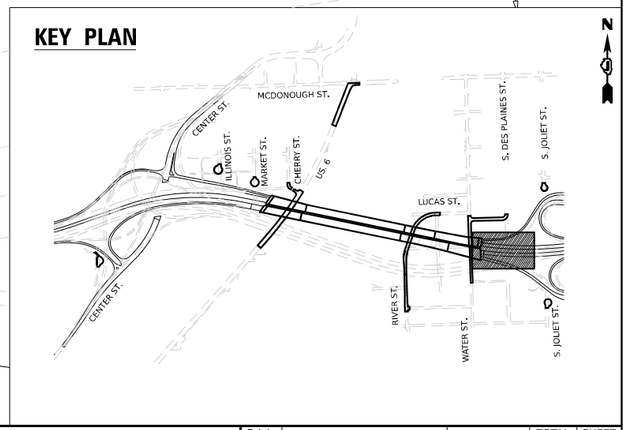

MODEL: Default
FILE NAME: pw://transystems-pw.bentley.com:transyscorp-pw1-hosted/Documents/Projects_2018/CH401/401180022/03-WSP/Project_Info/Utilities/CO)-V3-Utilities/62R23-RB-1/Sheets/0162R23-sht-removal3.dgn

V3 Companies
7325 Janes Avenue
Woodridge, IL 60517
630.724.9200 phone
630.724.9202 fax
www.v3co.com

USER NAME = dpung	DESIGNED - CD	REVISED -	
	DRAWN - DP	REVISED -	
PLOT SCALE =	CHECKED - JH	REVISED -	
PLOT DATE = 11/6/2025	DATE - 11/7/2025	REVISED -	

STATE OF ILLINOIS
DEPARTMENT OF TRANSPORTATION

JOLIET UTILITY REMOVAL PLAN

SCALE: 1"=20' | SHEET 3 OF 9 SHEETS | STA. TO STA.

F.A.I. RTE.	SECTION	COUNTY	TOTAL SHEETS	SHEET NO.
80	FAI 80 21 STRUCTURE 2	WILL	1230	361
		CONTRACT NO. 62R23		
		ILLINOIS	FED. AID PROJECT	

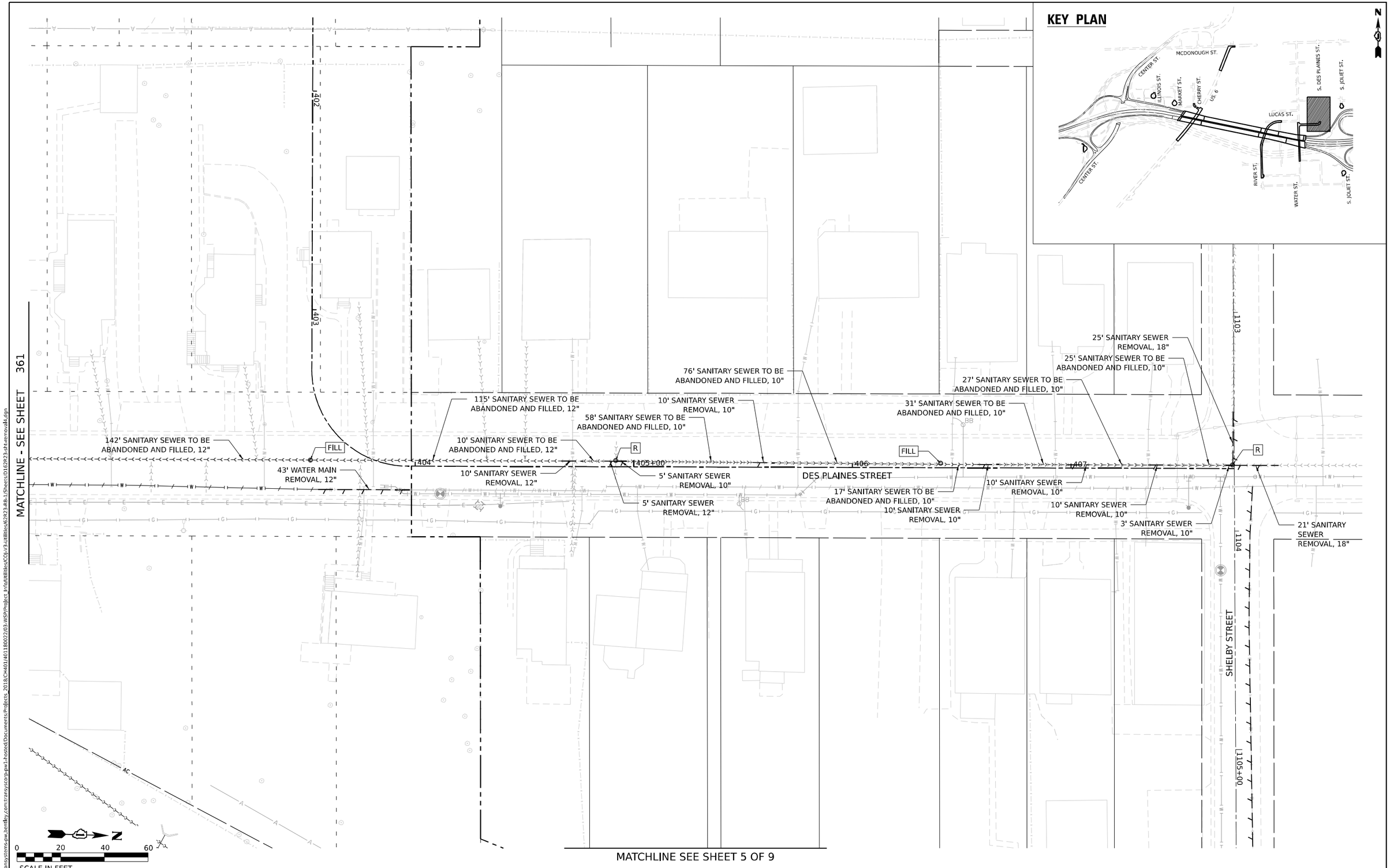

MODEL: Default
FILE NAME: pw://transystems-pw.bentley.com:transyscorp-pw1-hosted/Documents/Projects_2018/CH401/401180022/03-WSP/Project_Info/Utilities/CDJ-V3-Utilities/62R23-RB-1/Sheets/D162R23-sht-removal4.dgn

V3 Companies
7325 Janes Avenue
Woodridge, IL 60517
630.724.9200 phone
630.724.9202 fax
www.v3co.com

USER NAME = dpung	DESIGNED - CD	REVISED -	
	DRAWN - DP	REVISED -	
PLOT SCALE =	CHECKED - JH	REVISED -	
PLOT DATE = 11/6/2025	DATE - 11/7/2025	REVISED -	

STATE OF ILLINOIS
DEPARTMENT OF TRANSPORTATION

JOLIET UTILITY REMOVAL PLAN

SCALE: 1"=20' | SHEET 4 OF 9 SHEETS | STA. TO STA.

F.A.I. RTE.	SECTION	COUNTY	TOTAL SHEETS	SHEET NO.
80	FAI 80 21 STRUCTURE 2	WILL	1230	362
		CONTRACT NO. 62R23		
		ILLINOIS	FED. AID PROJECT	

MATCHLINE - SEE SHEET 362

MATCHLINE - SEE SHEET 361

297' SANITARY SEWER TO BE ABANDONED AND FILLED, 24"

FILL

373' WATER MAIN REMOVAL, 8"

SHELBY STREET

30' SANITARY SEWER TO BE ABANDONED AND FILLED, 21"

29' SANITARY SEWER TO BE ABANDONED AND FILLED, 21"

44' SANITARY SEWER TO BE ABANDONED AND FILLED, 21"

200' SANITARY SEWER TO BE ABANDONED AND FILLED, 24"

FILL

FILL

R

10' SANITARY SEWER REMOVAL, 21"

700+00

701

JOLIET STREET

63' SANITARY SEWER TO BE ABANDONED AND FILLED, 21"

6' WATER MAIN TO BE ABANDONED, 6"

FIRE HYDRANT TO BE RELOCATED

44' WATER MAIN TO BE ABANDONED, 8"

6' SANITARY SEWER REMOVAL, 21"

10' SANITARY SEWER REMOVAL, 21"

SHELBY STREET

15+00

14

13

15+00

16

17

18

12

11

AC

0 20 40 60

SCALE IN FEET

KEY PLAN

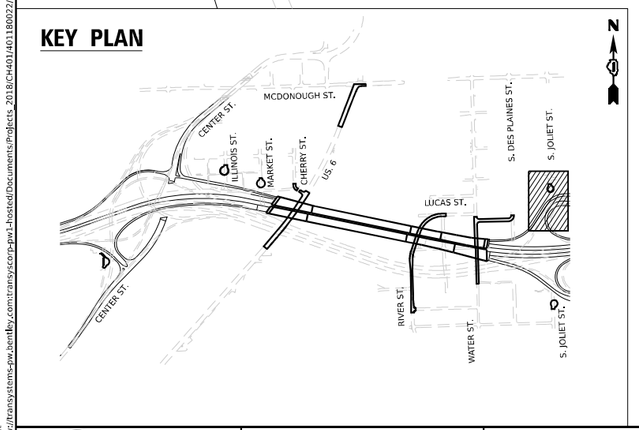

MODEL: Default
FILE NAME: pw://transystems-pw.bentley.com:transyscorp-pw1-hosted/Documents/Projects_2018/CH401/401180022/03-WSP/Project_Info/Utilities/CQJ-V3-Utilities/62R23-4B-1/Sheets/0162R23-3H-removal5.dgn

V3 Companies
7325 Janes Avenue
Woodridge, IL 60517
630.724.9200 phone
630.724.9202 fax
www.v3co.com

USER NAME = dpung	DESIGNED - CD	REVISED -	
	DRAWN - DP	REVISED -	
PLOT SCALE =	CHECKED - JH	REVISED -	
PLOT DATE = 11/6/2025	DATE - 11/7/2025	REVISED -	

STATE OF ILLINOIS
DEPARTMENT OF TRANSPORTATION

JOLIET UTILITY REMOVAL PLAN

SCALE: 1"=20' | SHEET 5 OF 9 SHEETS | STA. TO STA.

F.A.I. RTE.	SECTION	COUNTY	TOTAL SHEETS	SHEET NO.
80	FAI 80 21 STRUCTURE 2	WILL	1230	363
		CONTRACT NO. 62R23		
		ILLINOIS	FED. AID PROJECT	

38' WATER MAIN REMOVAL, 6"

5' WATER SERVICE REMOVAL, 1.5"

187' WATER SERVICE TO BE ABANDONED, 1.5"

6' WATER SERVICE REMOVAL, 1.5"

5' WATER SERVICE REMOVAL, 1.5"

21' WATER MAIN REMOVAL, 6"

193' WATER SERVICE TO BE ABANDONED, 1.5"

376' WATER SERVICE TO BE ABANDONED, 1.5"

R

100+00 | 101 | 102 | 103 | 104

RIVER STREET

1200+00

1100+00

1201

1101

1102

SOUTH STREET

DAVIS STREET

AC

689

690+00

MATCHLINE - SEE SHEET 359

MATCHLINE - SEE SHEET 365

0 20 40 60

SCALE IN FEET

KEY PLAN

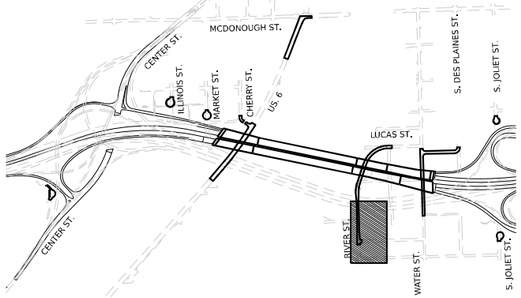

MODEL: Default
FILE NAME: pw://transystems-pw.bentley.com:transyscorp-pw1-hosted/Documents/Projects_2018/CH401/401180022/03-WSP/Project_Info/Utilities/CO)-V3-Utilities/62R23-Rt8-1/Sheets/0162R23-sht-removal8.dgn

V3 Companies
7325 Janes Avenue
Woodridge, IL 60517
630.724.9200 phone
630.724.9202 fax
www.v3co.com

USER NAME = dpung	DESIGNED - CD	REVISED -	
	DRAWN - DP	REVISED -	
PLOT SCALE =	CHECKED - JH	REVISED -	
PLOT DATE = 11/6/2025	DATE - 11/7/2025	REVISED -	

STATE OF ILLINOIS
DEPARTMENT OF TRANSPORTATION

JOLIET UTILITY REMOVAL PLAN

SCALE: 1"=20' | SHEET 6 OF 9 SHEETS | STA. TO STA.

F.A.I. RTE.	SECTION	COUNTY	TOTAL SHEETS	SHEET NO.
80	FAI 80 21 STRUCTURE 2	WILL	1230	364
		CONTRACT NO. 62R23		
		ILLINOIS	FED. AID PROJECT	

MATCHLINE - SEE SHEET 361

692

691

0+00

1

175' STORM SEWER TO BE ABANDONED, 12"

204' SANITARY SEWER TO BE ABANDONED AND FILLED, 12"

KIEP AVENUE

FILL

418' WATER MAIN TO BE ABANDONED, 6"

12' WATER MAIN TO BE ABANDONED, 6"

12' WATER MAIN REMOVAL, 8"

371' WATER MAIN TO BE ABANDONED, 8"

2000

2001

2002

40' WATER MAIN TO BE ABANDONED, 8"

6' WATER MAIN REMOVAL, 8"

WATER STREET

59' WATER MAIN TO BE ABANDONED, 8"

134' WATER MAIN REMOVAL, 8"

302

301

300+00

299

DAVIS STREET

1105+00

1106

MATCHLINE - SEE SHEET 364

MATCHLINE - SEE SHEET 366

KEY PLAN

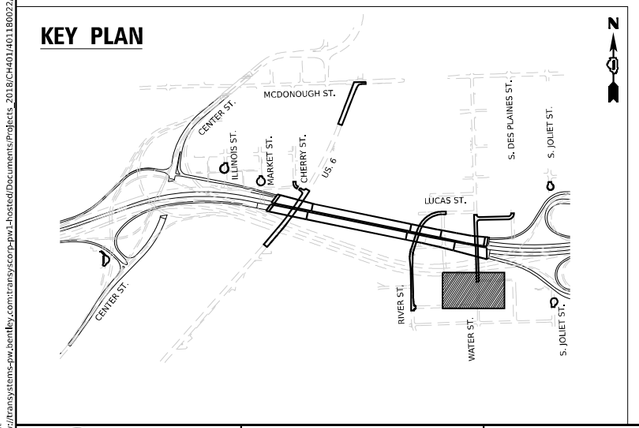

N

0 20 40 60

SCALE IN FEET

MODEL: Default
FILE NAME: pw://transystems-pw.bentley.com:transyscorp-pw1-hosted/Documents/Projects_2018/C-M401/401180022/03-WSP/Project Info/Utilities/JCOL-V3-Utilities/62R23-sht-removal7.dgn

V3 Companies
7325 Janes Avenue
Woodridge, IL 60517
630.724.9200 phone
630.724.9202 fax
www.v3co.com

USER NAME = dpung	DESIGNED - CD	REVISED -	
	DRAWN - DP	REVISED -	
PLOT SCALE =	CHECKED - JH	REVISED -	
PLOT DATE = 11/6/2025	DATE - 11/7/2025	REVISED -	

STATE OF ILLINOIS
DEPARTMENT OF TRANSPORTATION

JOLIET UTILITY REMOVAL PLAN

SCALE: 1"=20' | SHEET 7 OF 9 SHEETS | STA. TO STA.

F.A.I. RTE.	SECTION	COUNTY	TOTAL SHEETS	SHEET NO.
80	FAI 80 21 STRUCTURE 2	WILL	1230	365
		CONTRACT NO. 62R23		
	ILLINOIS	FED. AID PROJECT		

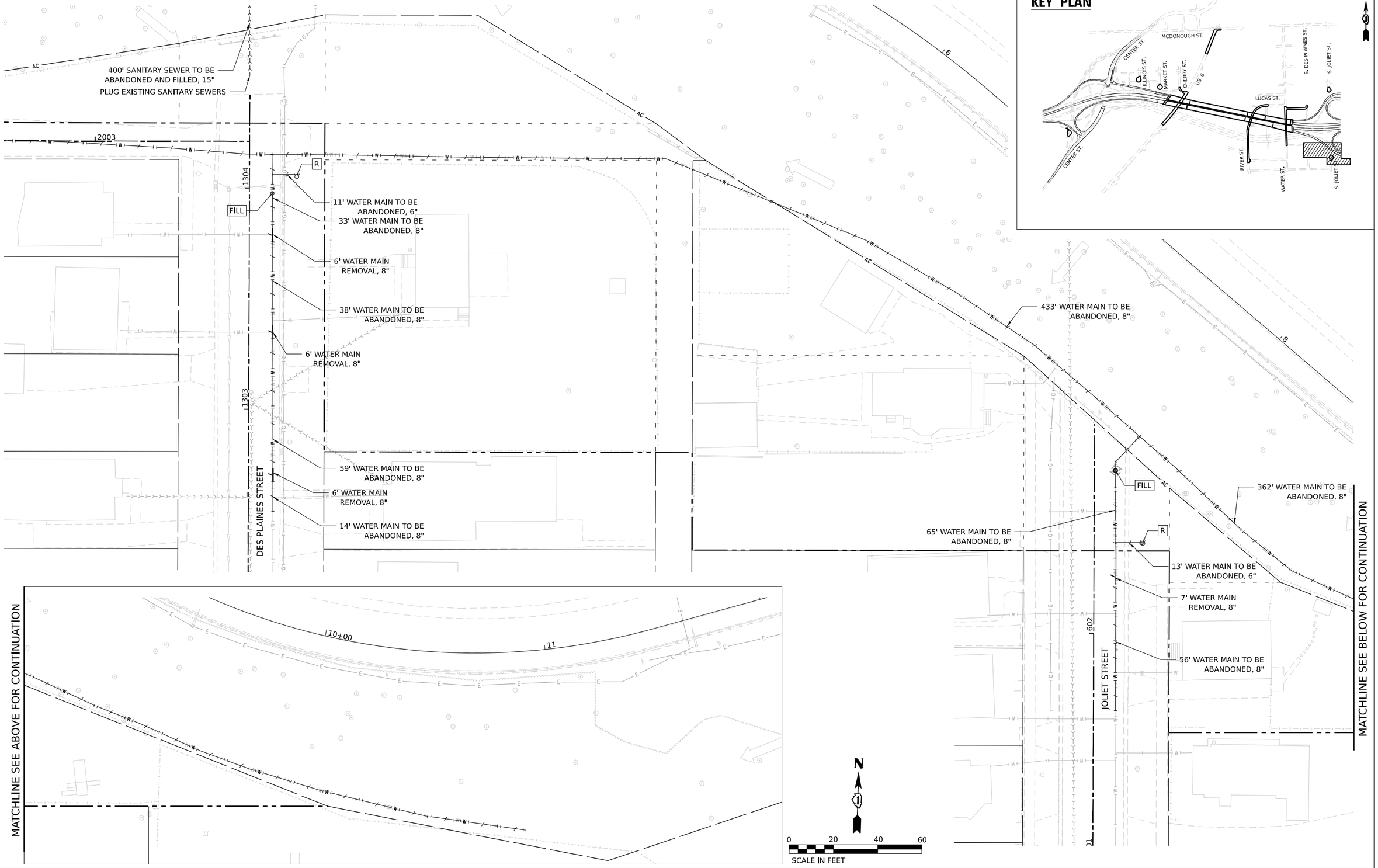

MODEL: Default
FILE NAME: pw://transystems-pw.bentley.com:transyscorp-pw1-hosted/Documents/Projects_2018/CH401/401180022/03-WSP/Project_Info/Utilities/CO1-V3-Utilities/62R23-4B-1/Sheets/D162R23-4H-removal8.dgn

V3 Companies
7325 Janes Avenue
Woodridge, IL 60517
630.724.9200 phone
630.724.9202 fax
www.v3co.com

USER NAME = dpung	DESIGNED - CD	REVISED -	
	DRAWN - DP	REVISED -	
PLOT SCALE =	CHECKED - JH	REVISED -	
PLOT DATE = 11/6/2025	DATE - 11/7/2025	REVISED -	

STATE OF ILLINOIS
DEPARTMENT OF TRANSPORTATION

JOLIET UTILITY REMOVAL PLAN

SCALE: 1"=20' | SHEET 8 OF 9 SHEETS | STA. TO STA.

F.A.I. RTE.	SECTION	COUNTY	TOTAL SHEETS	SHEET NO.
80	FAI 80 21 STRUCTURE 2	WILL	1230	366
		CONTRACT NO. 62R23		
		ILLINOIS	FED. AID PROJECT	

25' WATER MAIN TO BE ABANDONED, 8"
13' WATER MAIN TO BE ABANDONED, 8"
18' WATER MAIN REMOVAL, 8"
312' WATER MAIN TO BE ABANDONED, 8"
CAP EXISTING WATER MAIN
FILL
14' WATER MAIN REMOVAL, 8"
7' WATER MAIN TO BE ABANDONED, 12"
54' SANITARY SEWER REMOVAL, 18"
16' WATER MAIN REMOVAL, 12"
36' WATER MAIN TO BE ABANDONED, 12"
R
MCDONOUGH STREET
1308
1309
1310.00
1311
1312
1313
1314
11' WATER MAIN TO BE ABANDONED, 12"
10' WATER MAIN TO BE ABANDONED, 8"
6' WATER MAIN REMOVAL, 8"
6' WATER MAIN REMOVAL, 12"
14' WATER MAIN TO BE ABANDONED, 8"
6' WATER MAIN REMOVAL, 12"
43' WATER MAIN TO BE ABANDONED, 12"
FILL
1233
15' WATER MAIN REMOVAL, 12"
144' WATER MAIN TO BE ABANDONED, 12"
1232
138' WATER MAIN TO BE ABANDONED, 8"
US 6 (RAILROAD STREET)
15' WATER MAIN TO BE ABANDONED, 12"
1231
163' WATER MAIN TO BE ABANDONED, 8"

KEY PLAN

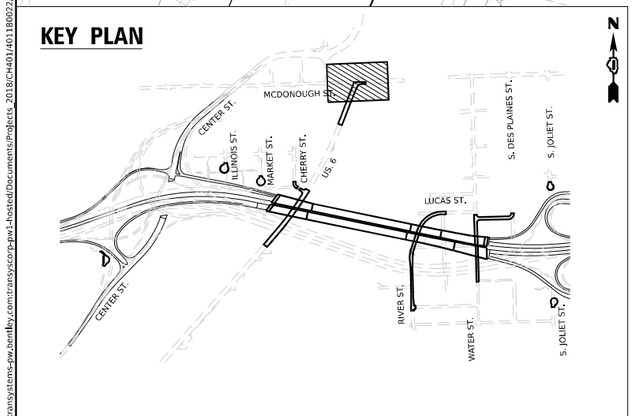

N

0 20 40 60
SCALE IN FEET

MODEL: Default
FILE NAME: pw://transystems-pw.bentley.com:transyscorp-pw1-hosted/Documents/Projects_2018/CH401/401180022/03-WSP/Project Info/Utilities/CO1-V3-Utilities/62R23-4B-1/Sheets/D162R23-sht-removal8.dgn

V3 Companies
7325 Janes Avenue
Woodridge, IL 60517
630.724.9200 phone
630.724.9202 fax
www.v3co.com

USER NAME = dpung	DESIGNED - CD	REVISED -	
	DRAWN - DP	REVISED -	
PLOT SCALE =	CHECKED - JH	REVISED -	
PLOT DATE = 11/6/2025	DATE - 11/7/2025	REVISED -	

STATE OF ILLINOIS
DEPARTMENT OF TRANSPORTATION

JOLIET UTILITY REMOVAL PLAN

SCALE: 1"=20' | SHEET 9 OF 9 SHEETS | STA. TO STA.

F.A.I. RTE.	SECTION	COUNTY	TOTAL SHEETS	SHEET NO.
80	FAI 80 21 STRUCTURE 2	WILL	1230	367
		CONTRACT NO. 62R23		
		ILLINOIS	FED. AID PROJECT	

VV-1	VV-2	VV-3
4' DIA. VALVE VAULT	4' DIA. VALVE VAULT	4' DIA. VALVE VAULT
TYPE A, TYPE 1 FRAME, CLOSED LID	TYPE A, TYPE 1 FRAME, CLOSED LID	TYPE A, TYPE 1 FRAME, CLOSED LID
STA 100+73.00, 24.19' LT	STA 100+93.08, 15.53' RT	STA 101+13.00, 24.19' LT
RIM = 519.39	RIM = 518.80	RIM = 519.44
GATE VALVE, 8"	GATE VALVE, 8"	GATE VALVE, 8"

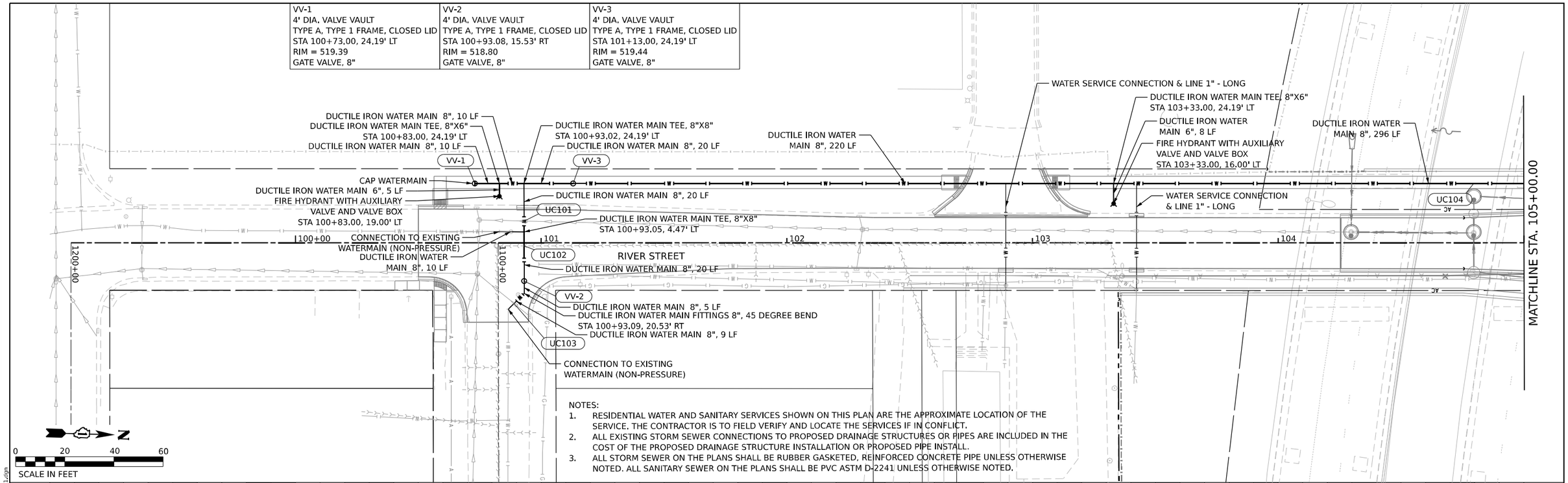

NOTES:

1. RESIDENTIAL WATER AND SANITARY SERVICES SHOWN ON THIS PLAN ARE THE APPROXIMATE LOCATION OF THE SERVICE. THE CONTRACTOR IS TO FIELD VERIFY AND LOCATE THE SERVICES IF IN CONFLICT.
2. ALL EXISTING STORM SEWER CONNECTIONS TO PROPOSED DRAINAGE STRUCTURES OR PIPES ARE INCLUDED IN THE COST OF THE PROPOSED DRAINAGE STRUCTURE INSTALLATION OR PROPOSED PIPE INSTALL.
3. ALL STORM SEWER ON THE PLANS SHALL BE RUBBER GASKETED, REINFORCED CONCRETE PIPE UNLESS OTHERWISE NOTED. ALL SANITARY SEWER ON THE PLANS SHALL BE PVC ASTM D-2241 UNLESS OTHERWISE NOTED.

PLAN — SURVEYED / PLOTTED / ALIGNMENT CHECKED / RT. OF WAY CHECKED / CADD FILE NAME — NOTE BOOK NO. ____ — BY — DATE

PROFILE — SURVEYED / PLOTTED / GRADES CHECKED / B.M. NOTED / STRUCTURE NOTATIONS CHKD — NOTE BOOK NO. ____ — BY — DATE

MODEL: Default
FILE NAME: pw://transystems-pw.bentley.com:transyscorp-pw1-hosted/Documents/Projects_2018/CH401/401180022/03-WSP/Project_Info/Utilities/CO)-V3-Utilities/62R23-RB-1/Sheets/D162R23-sht-drain1.dgn

V3 Companies
7325 Janes Avenue
Woodridge, IL 60517
630.724.9200 phone
630.724.9202 fax
www.v3co.com

USER NAME = dpung	DESIGNED - CD	REVISED -	
	DRAWN - DP	REVISED -	
PLOT SCALE =	CHECKED - JH	REVISED -	
PLOT DATE = 11/5/2025	DATE - 11/7/2025	REVISED -	

STATE OF ILLINOIS
DEPARTMENT OF TRANSPORTATION

JOLIET DRAINAGE AND UTILITY PLAN & PROFILE

SCALE: 1"=20' | SHEET 1 OF 13 SHEETS | STA. 100+00.00 TO STA. 105+00.00

F.A.I. RTE.	SECTION	COUNTY	TOTAL SHEETS	SHEET NO.
80	FAI 80 21 STRUCTURE 2	WILL	1230	368

CONTRACT NO. 62R23

ILLINOIS | FED. AID PROJECT

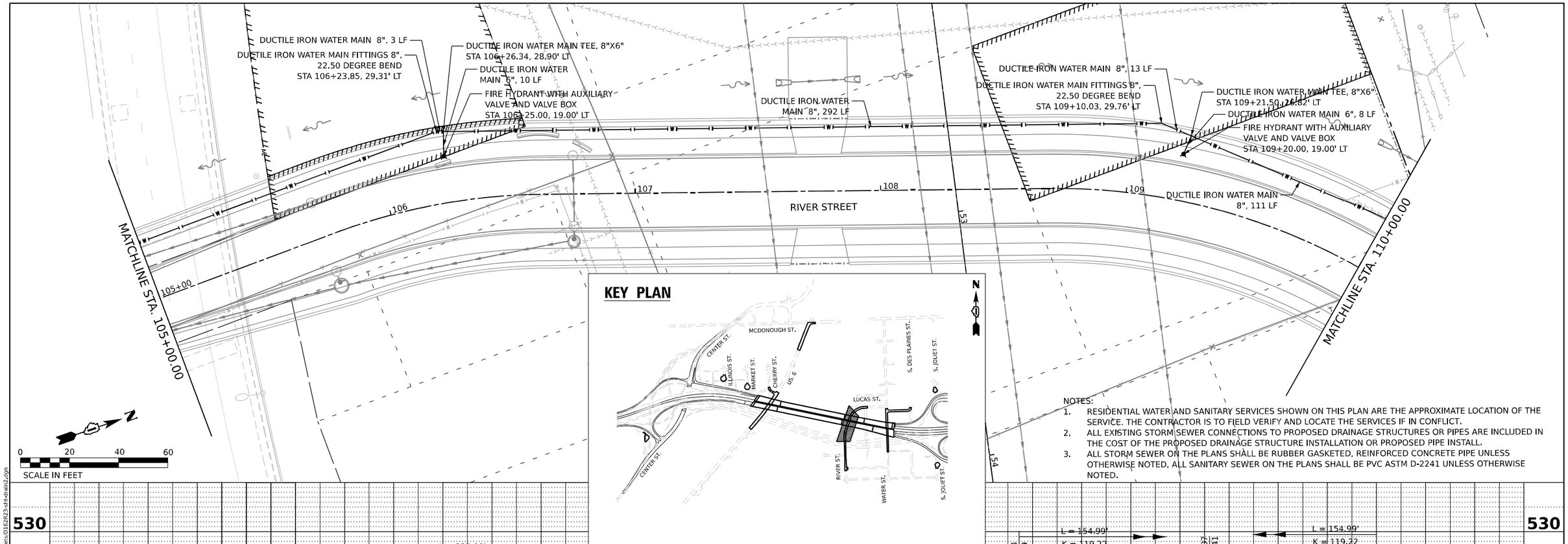

NOTES:

1. RESIDENTIAL WATER AND SANITARY SERVICES SHOWN ON THIS PLAN ARE THE APPROXIMATE LOCATION OF THE SERVICE. THE CONTRACTOR IS TO FIELD VERIFY AND LOCATE THE SERVICES IF IN CONFLICT.
2. ALL EXISTING STORM SEWER CONNECTIONS TO PROPOSED DRAINAGE STRUCTURES OR PIPES ARE INCLUDED IN THE COST OF THE PROPOSED DRAINAGE STRUCTURE INSTALLATION OR PROPOSED PIPE INSTALL.
3. ALL STORM SEWER ON THE PLANS SHALL BE RUBBER GASKETED, REINFORCED CONCRETE PIPE UNLESS OTHERWISE NOTED. ALL SANITARY SEWER ON THE PLANS SHALL BE PVC ASTM D-2241 UNLESS OTHERWISE NOTED.

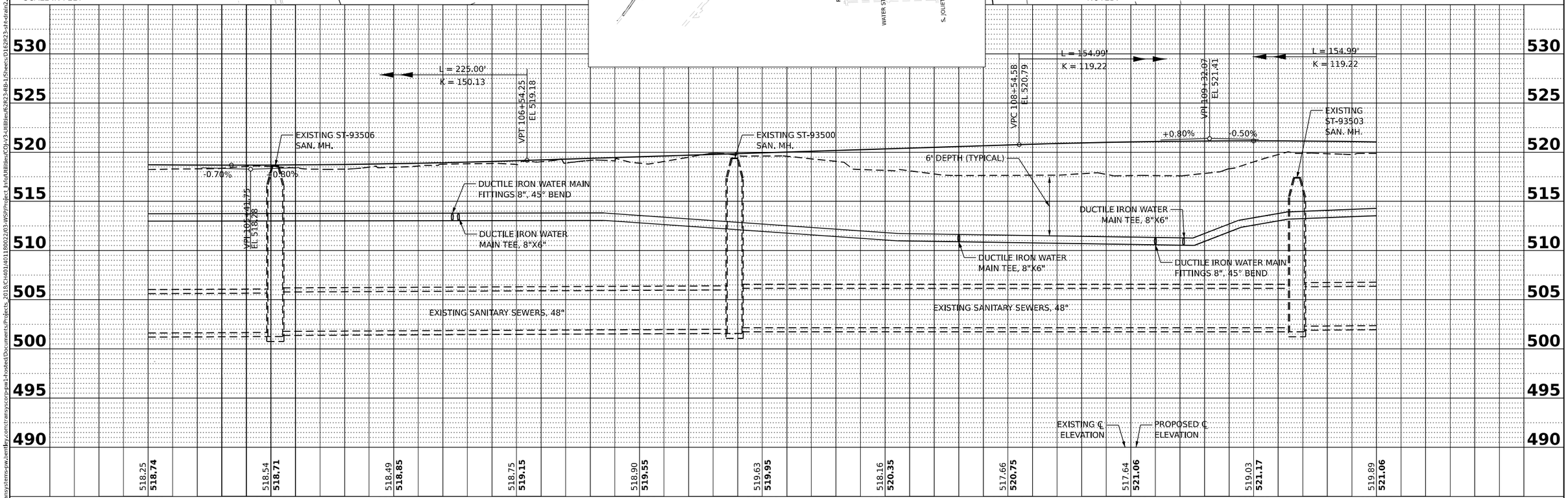

PLAN

NOTE BOOK NO.	SURVEYED	BY	DATE
	PLOTTED		
	ALIGNMENT CHECKED		
	RT. OF WAY CHECKED		
	CADD FILE NAME		

PROFILE

NOTE BOOK NO.	SURVEYED	BY	DATE
	PLOTTED		
	PROFILE CHECKED		
	B.M. NOTED		
	STRUCTURE NOTATNS CHKD		

MODEL: Default
FILE NAME: pw://transystems-pw.bentley.com:transyscorp-pw1-hosted/Documents/Projects_2018/CH401/401180022/03-WSP/Project_Info/Utilities/CD/v3-Utilities/62R23-RB-1/Sheets/D162R23-sht-drain2.dgn

V3 Companies
7325 Janes Avenue
Woodridge, IL 60517
630.724.9200 phone
630.724.9202 fax
www.v3co.com

USER NAME = dpung	DESIGNED - CD	REVISED -	
	DRAWN - DP	REVISED -	
PLOT SCALE =	CHECKED - JH	REVISED -	
PLOT DATE = 11/5/2025	DATE - 11/7/2025	REVISED -	

STATE OF ILLINOIS
DEPARTMENT OF TRANSPORTATION

JOLIET DRAINAGE AND UTILITY PLAN & PROFILE

SCALE: 1"=20' | SHEET 2 OF 13 SHEETS | STA. 105+00.00 TO STA. 110+00.00

F.A.I. RTE.	SECTION	COUNTY	TOTAL SHEETS	SHEET NO.
80	FAI 80 21 STRUCTURE 2	WILL	1230	369

CONTRACT NO. 62R23

ILLINOIS | FED. AID PROJECT

1100
4' DIA. MANHOLE
TYPE A, TYPE 1 FRAME, CLOSED LID
STA 110+18.04, 49.96' LT
RIM = 518.35
PR IE 12" RCP = 515.35 S
PR IE 12" RCP = 515.17 E

ST-1
4' DIA. CATCH BASIN
TYPE A, TYPE 11 FRAME & GRATE
STA 111+82.00, 13.93' RT
RIM = 519.81
PR IE 12" RCP = 516.81 N
PR IE 12" RCP = 516.81 SW

ST-2
4' DIA. MANHOLE
TYPE A, TYPE 11 FRAME & GRATE
STA 111+82.00, 13.97' LT
RIM = 519.84
PR IE 12" RCP = 514.25 W
PR IE 12" RCP = 516.21 S
PR IE 15" RCP = 514.25 E

ST-3
4' DIA. CATCH BASIN
TYPE A, TYPE 11 FRAME & GRATE
STA 113+59.00, 13.71' RT
RIM = 519.34
PR IE 12" RCP = 513.62 N
PR IE 12" RCP = 513.62 S

ST-4
4' DIA. MANHOLE
TYPE A, TYPE 11 FRAME & GRATE
STA 113+59.00, 14.02' LT
RIM = 519.33
PR IE 15" RCP = 513.37 W
PR IE 12" RCP = 513.47 S
PR IE 18" RCP = 513.37 E

STORM SEWERS, CLASS A, TYPE 2, 18" @ 0.50%, 139 LF

STORM SEWERS, CLASS A, TYPE 2, 12" @ 0.50%, 184 LF

STORM SEWERS, CLASS A, TYPE 2, 15" @ 2.00%, 177 LF

STORM SEWERS, CLASS A, TYPE 2, 12" @ 0.50%, 30 LF

STORM SEWERS, CLASS A, TYPE 2, 12" @ 2.00%, 30 LF

LUCAS STREET

FIRE HYDRANT WITH AUXILIARY VALVE AND VALVE BOX
STA 112+32.00, 19.00' RT

DUCTILE IRON WATER MAIN 6", 2 LF
DUCTILE IRON WATER MAIN TEE, 8"X6"
STA 112+32.00, 21.00' RT

DUCTILE IRON WATER MAIN 8", 239 LF

DUCTILE IRON WATER MAIN 8", 194 LF

DUCTILE IRON WATER MAIN FITTINGS 8", 11.25 DEGREE BEND
STA 110+39.85, 16.62' LT

DUCTILE IRON WATER MAIN 8", 20 LF

DUCTILE IRON WATER MAIN FITTINGS 8", 22.50 DEGREE BEND
STA 110+22.64, 23.97' LT

STORM SEWERS, CLASS A, TYPE 2, 12" @ 0.65%, 34 LF

1030
4' DIA. CATCH BASIN
TYPE A, TYPE 8 GRATE
STA 113+59.00, 61.70' LT
RIM = 516.50
PR IE 12" RCP = 513.84 N

MATCHLINE STA. 110+00.00

MATCHLINE STA. 114+50.00

KEY PLAN

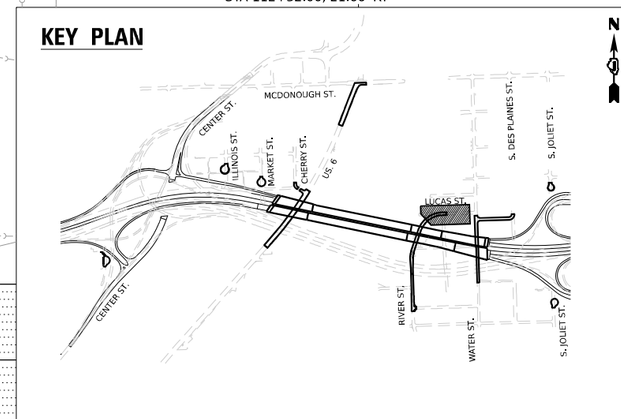

NOTES:
1. RESIDENTIAL WATER AND SANITARY SERVICES SHOWN ON THIS PLAN ARE THE APPROXIMATE LOCATION OF THE SERVICE. THE CONTRACTOR IS TO FIELD VERIFY AND LOCATE THE SERVICES IF IN CONFLICT.
2. ALL EXISTING STORM SEWER CONNECTIONS TO PROPOSED DRAINAGE STRUCTURES OR PIPES ARE INCLUDED IN THE COST OF THE PROPOSED DRAINAGE STRUCTURE INSTALLATION OR PROPOSED PIPE INSTALL.
3. ALL STORM SEWER ON THE PLANS SHALL BE RUBBER GASKETED, REINFORCED CONCRETE PIPE UNLESS OTHERWISE NOTED. ALL SANITARY SEWER ON THE PLANS SHALL BE PVC ASTM D-2241 UNLESS OTHERWISE NOTED.

0 20 40 60
SCALE IN FEET

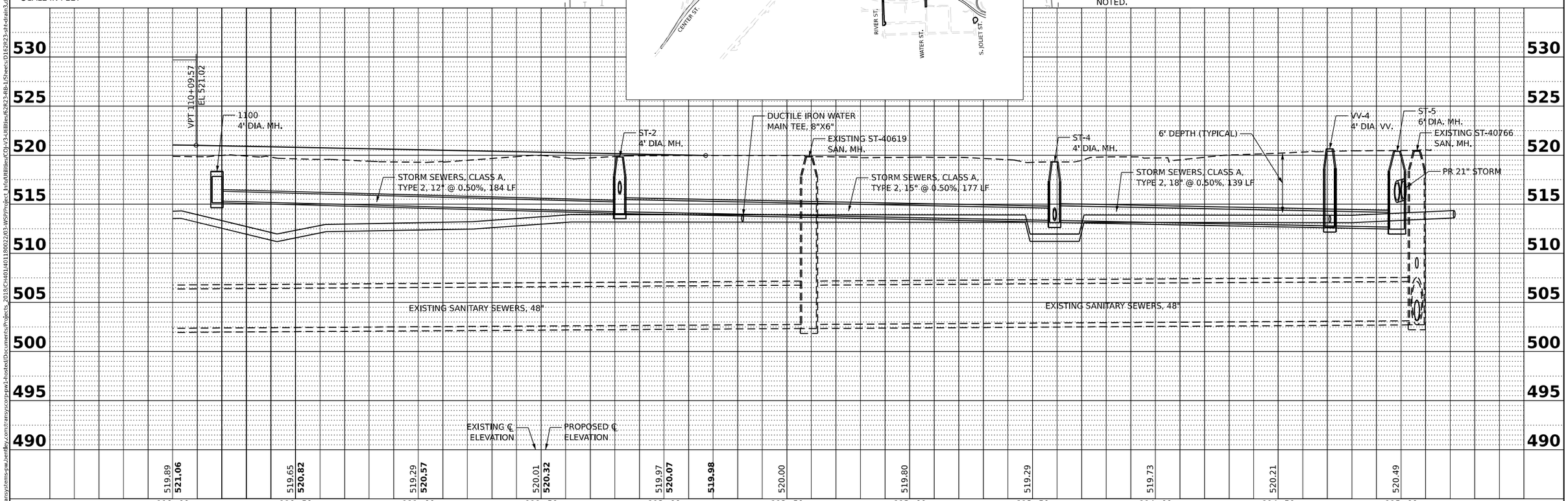

PLAN
NOTE BOOK NO.
SURVEYED
PLOTTED
ALIGNMENT CHECKED
RT. OF WAY CHECKED
CADD FILE NAME
BY
DATE

PROFILE
NOTE BOOK NO.
SURVEYED
PLOTTED
GRADES CHECKED
B.M. NOTED
STRUCTURE NOTATNS CHKD
BY
DATE

MODEL: Default
FILE NAME: pw://transystems-pw.bentley.com:transyscorp-pw1-hosted/Documents/Projects_2018/CH401/401180022/03-WSP/Project_Info/Utilities/CO-V3-Utilities/62R23-RB-1/Sheets/D162R23-sht-drain3.dgn

V3 Companies
7325 Janes Avenue
Woodridge, IL 60517
630.724.9200 phone
630.724.9202 fax
www.v3co.com

USER NAME = dpung	DESIGNED - CD	REVISED -	
	DRAWN - DP	REVISED -	
PLOT SCALE =	CHECKED - JH	REVISED -	
PLOT DATE = 11/5/2025	DATE - 11/7/2025	REVISED -	

STATE OF ILLINOIS
DEPARTMENT OF TRANSPORTATION

JOLIET DRAINAGE AND UTILITY PLAN & PROFILE

SCALE: 1"=20' | SHEET 3 OF 13 SHEETS | STA. 110+00.00 TO STA. 114+50.00

F.A.I. RTE.	SECTION	COUNTY	TOTAL SHEETS	SHEET NO.
80	FAI 80 21 STRUCTURE 2	WILL	1230	370

CONTRACT NO. 62R23

ILLINOIS | FED. AID PROJECT

VV-5
4' DIA. VALVE VAULT
TYPE A, TYPE 1 FRAME, CLOSED LID
STA 299+00.00, 6.00' RT
RIM = 524.27
GATE VALVE, 8"

VV-6
4' DIA. VALVE VAULT
TYPE A, TYPE 1 FRAME, CLOSED LID
STA 301+28.00, 6.00' RT
RIM = 527.50
GATE VALVE, 8"

VV-7
4' DIA. VALVE VAULT
TYPE A, TYPE 1 FRAME, CLOSED LID
STA 301+38.00, 21.00' RT
RIM = 527.42
GATE VALVE, 8"

SN-14
5' DIA. SANITARY MANHOLE
TYPE A, TYPE 1 FRAME, CLOSED LID
STA 301+49.00, 0.76' RT
RIM = 527.58
EX IE 12" VCP = 510.23 S
EX IE 12" VCP =510.23 N
PR IE 12" PVC = 510.23 E

VV-8
4' DIA. VALVE VAULT
TYPE A, TYPE 1 FRAME, CLOSED LID
STA 301+58.00, 6.00' RT
RIM = 527.50
GATE VALVE, 8"

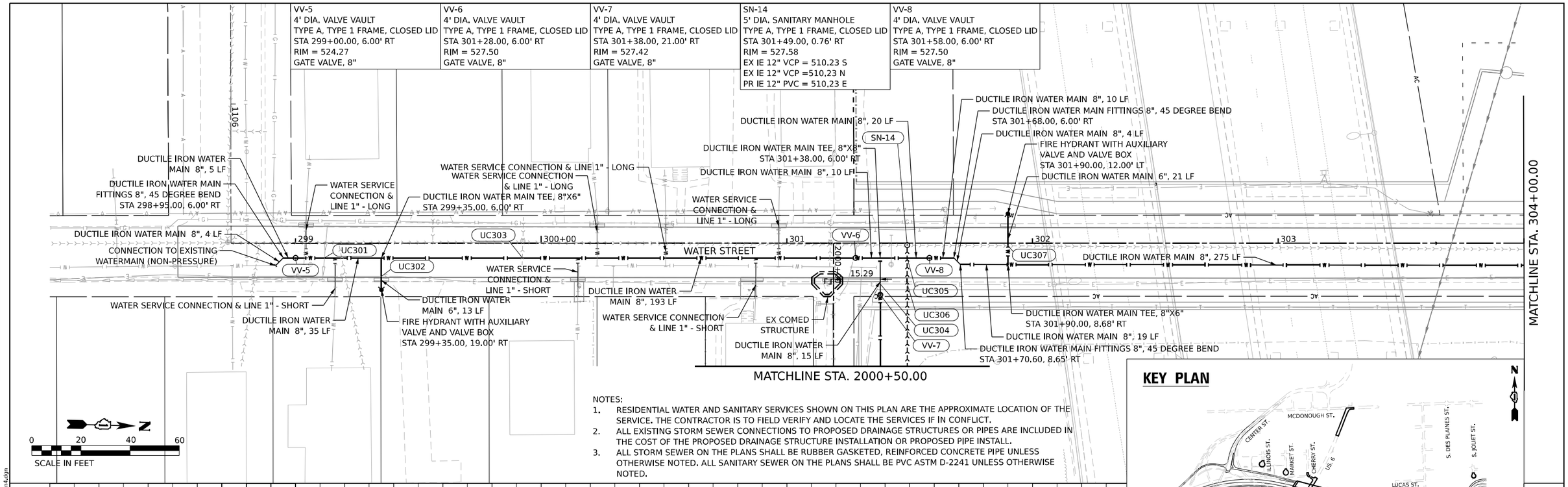

NOTES:

1. RESIDENTIAL WATER AND SANITARY SERVICES SHOWN ON THIS PLAN ARE THE APPROXIMATE LOCATION OF THE SERVICE. THE CONTRACTOR IS TO FIELD VERIFY AND LOCATE THE SERVICES IF IN CONFLICT.
2. ALL EXISTING STORM SEWER CONNECTIONS TO PROPOSED DRAINAGE STRUCTURES OR PIPES ARE INCLUDED IN THE COST OF THE PROPOSED DRAINAGE STRUCTURE INSTALLATION OR PROPOSED PIPE INSTALL.
3. ALL STORM SEWER ON THE PLANS SHALL BE RUBBER GASKETED, REINFORCED CONCRETE PIPE UNLESS OTHERWISE NOTED. ALL SANITARY SEWER ON THE PLANS SHALL BE PVC ASTM D-2241 UNLESS OTHERWISE NOTED.

KEY PLAN

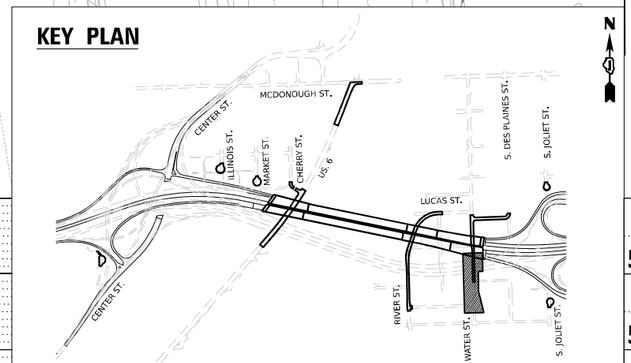

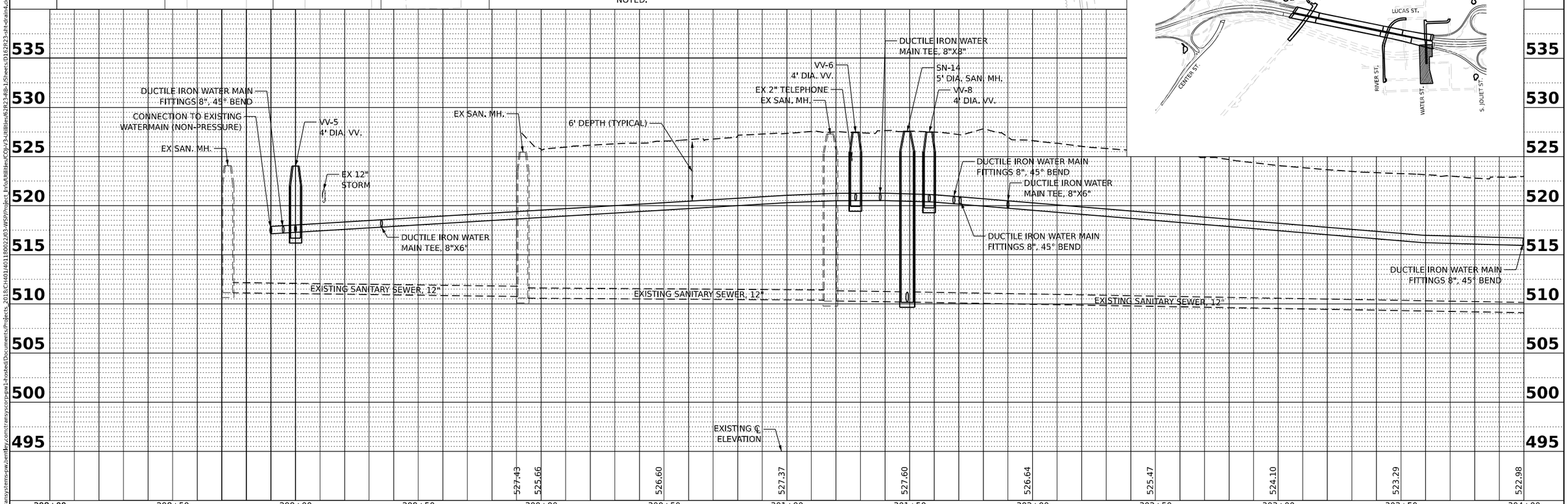

PLAN
SURVEYED
PLOTTED
ALIGNMENT CHECKED
RT. OF WAY CHECKED
CADD FILE NAME
NOTE BOOK
NO.
BY
DATE

PROFILE
SURVEYED
PLOTTED
GRADES CHECKED
BLK. NOTED
STRUCTURE NOTAT'NS CHKD
NOTE BOOK
NO.
BY
DATE

MODEL: Default
FILE NAME: pw://transystems-pw.bentley.com:transyscorp-pw1-hosted/Documents/Projects_2018/CH401/401180022/03-WSP/Project_Info/Utilities/62R23-4B-1/Sheets/D162R23-sht-drain4.dgn

V3 Companies
7325 Janes Avenue
Woodridge, IL 60517
630.724.9200 phone
630.724.9202 fax
www.v3co.com

USER NAME = dpung	DESIGNED - CD	REVISED -	
	DRAWN - DP	REVISED -	
PLOT SCALE =	CHECKED - JH	REVISED -	
PLOT DATE = 11/5/2025	DATE - 11/7/2025	REVISED -	

STATE OF ILLINOIS
DEPARTMENT OF TRANSPORTATION

JOLIET DRAINAGE AND UTILITY PLAN & PROFILE

SCALE: 1"=20' | SHEET 4 OF 13 SHEETS | STA. 298+00.00 TO STA. 304+00.00

F.A.I. RTE.	SECTION	COUNTY	TOTAL SHEETS	SHEET NO.
80	FAI 80 21 STRUCTURE 2	WILL	1230	371

CONTRACT NO. 62R23

ILLINOIS | FED. AID PROJECT

SN-1
4' DIA. SANITARY MANHOLE
TYPE A, TYPE 1 FRAME, CLOSED LID
STA 304+75.35, 3.02' RT
RIM = 522.32
EX IE 12" VCP = 508.82 S
PR IE 12" RCP = 508.80 N

VV-10
4' DIA. VALVE VAULT
TYPE A, TYPE 1 FRAME, CLOSED LID
STA 400+25.00, 5.00' RT
RIM = 520.98
GATE VALVE, 8"

SN-2
5' DIA. SANITARY MANHOLE
TYPE A, TYPE 1 FRAME, CLOSED LID
STA 307+51.73, 3.00' RT
RIM = 520.69
PR IE 24" RCP = 507.29 N
PR IE 12" RCP = 507.29 S
PR IE 24" RCP = 507.29 E

VV-9
4' DIA. VALVE VAULT
TYPE A, TYPE 1 FRAME, CLOSED LID
STA 307+24.00, 9.00' RT
RIM = 520.70
GATE VALVE, 8"

SN-3
EX. 6' DIA. SANITARY MANHOLE
NEW TYPE A, TYPE 1 FRAME, CLOSED LID
STA 307+99.42, 5.75' LT
RIM = 520.41
EX IE 48" RCP = ±503.15 N
EX IE 48" RCP = ±503.15 W
PR IE 24" RCP = 507.17 S
PR IE 24" RCP = 508.54 N

VV-11
4' DIA. VALVE VAULT
TYPE A, TYPE 1 FRAME, CLOSED LID
STA 307+62.00, 9.10' RT
RIM = 520.53
GATE VALVE, 8"

NOTES:
1. RESIDENTIAL WATER AND SANITARY SERVICES SHOWN ON THIS PLAN ARE THE APPROXIMATE LOCATION OF THE SERVICE. THE CONTRACTOR IS TO FIELD VERIFY AND LOCATE THE SERVICES IF IN CONFLICT.
2. ALL EXISTING STORM SEWER CONNECTIONS TO PROPOSED DRAINAGE STRUCTURES OR PIPES ARE INCLUDED IN THE COST OF THE PROPOSED DRAINAGE STRUCTURE INSTALLATION OR PROPOSED PIPE INSTALL.
3. ALL STORM SEWER ON THE PLANS SHALL BE RUBBER GASKETED, REINFORCED CONCRETE PIPE UNLESS OTHERWISE NOTED. ALL SANITARY SEWER ON THE PLANS SHALL BE PVC ASTM D-2241 UNLESS OTHERWISE NOTED.

0 20 40 60
SCALE IN FEET

MATCHLINE STA. 304+00.00

FIRE HYDRANT WITH AUXILIARY VALVE AND VALVE BOX STA 304+65.00, 13.00' LT
UC311
DUCTILE IRON WATER MAIN 6", 22 LF
UC312
DUCTILE IRON WATER MAIN TEE, 8"X6" STA 304+65.00, 9.00' RT
SN-1
DUCTILE IRON WATER MAIN 8", 259 LF
SANITARY SEWERS, PVC, 12" @ 0.55%, 276 LF
304
305+00
306
307
WATER STREET
UC308
UC309
UC310
UC314
UC313
UC316
UC315
VV-9
1900
DUCTILE IRON WATER MAIN 8", 15 LF
SN-2
DUCTILE IRON WATER MAIN 8", 16 LF
UC317
VV-10
DUCTILE IRON WATER MAIN 8", 10 LF
FIRE HYDRANT WITH AUXILIARY VALVE AND VALVE BOX STA 400+35.00, 19.00' RT
DUCTILE IRON WATER MAIN 6", 14 LF
UC319
DUCTILE IRON WATER MAIN TEE, 8"X6" STA 400+35.00, 5.00' RT
MATCHLINE STA. 400+50.00
MATCHLINE STA. 114+50.00
STORM SEWERS, CLASS A, TYPE 2, 12" @ 1.00%, 34 LF
UC323
VV-4
DUCTILE IRON WATER MAIN 8", 50 LF
SANITARY SEWERS, PVC, 24" @ 0.24%, 48 LF
ST-7
STORM SEWERS, CLASS A, TYPE 2, 18" @ 0.24%, 128 LF
DUCTILE IRON WATER MAIN TEE, 8"X8" STA 307+38.74, 9.00' RT
UC320
UC321
UC324
UC322
UC318
UC326
UC325
UC327
ST-5
ST-6
SN-4
SN-3
VV-11
115+00
308
CONNECTION TO EXISTING WATERMAIN (NON-PRESSURE)
SANITARY SEWERS, PVC, 24" @ 0.50%, 14 LF
DUCTILE IRON WATER MAIN 8", 25 LF
DUCTILE IRON WATER MAIN TEE, 8"X8" STA 307+90.65, 9.22' RT
DUCTILE IRON WATER MAIN 8", 29 LF
DUCTILE IRON WATER MAIN 8", 23 LF
VV-4
4' DIA. VALVE VAULT
TYPE A, TYPE 1 FRAME, CLOSED LID
STA 114+71.00, 21.00' RT
RIM = 520.66
GATE VALVE, 8"

ST-7
4' DIA. CATCH BASIN
TYPE A, TYPE 11 FRAME & GRATE
STA 307+94.74, 22.67' LT
RIM = 520.36
PR IE 12" RCP = 517.36 N

SN-4
5' DIA. SANITARY MANHOLE
TYPE A, TYPE 1 FRAME, CLOSED LID
STA 308+10.99, 1.68' RT
RIM = 520.44
EX IE 24" RCP = 508.67 N
PR IE 24" RCP = 508.61 S

1900
4' DIA. MANHOLE
TYPE A, TYPE 1 FRAME, CLOSED LID
STA 306+99.29, 4.10' LT
RIM = 520.01
EX IE 12" RCP = 516.07 S
PR IE 18" RCP = 516.07 N
PR IE 15" RCP = 516.07 E

ST-5
5' DIA. MANHOLE
TYPE A, TYPE 1 FRAME, CLOSED LID
STA 308+26.75, 13.94' LT
RIM = 520.40
PR IE 18" RCP = 512.68 W
PR IE 12" RCP = 515.43 SW
PR IE 18" RCP = 515.43 S
PR IE 24" RCP = 512.68 N

ST-6
4' DIA. MANHOLE
TYPE A, TYPE 1 FRAME, CLOSED LID
STA 308+09.32, 12.24' LT
RIM = 520.40
EX IE 12" RCP = 516.17 E
EX IE 12" RCP = 515.96 W
EX IE 24" RCP = 512.31 N
PR IE 24" RCP = 512.56 S

KEY PLAN

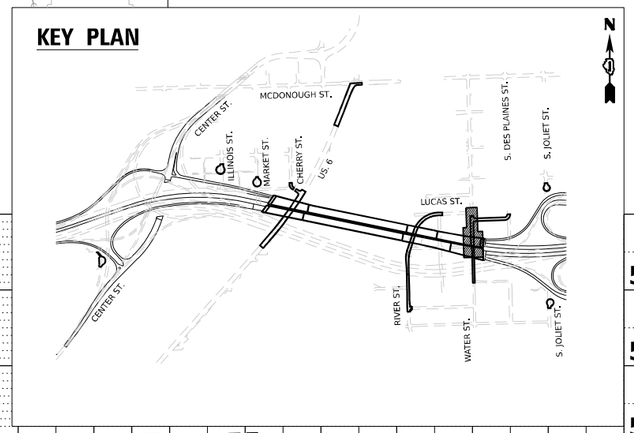

530 525 520 515 510 505 500 495 490

STORM SEWERS, CLASS A, TYPE 2, 24" @ 0.50%, 24 LF
STORM SEWERS, CLASS A, TYPE 2, 18" @ 0.50%, 128 LF
VV-11
4' DIA. VV.
SN-2
5' DIA. SAN. MH.
ST-5
6' DIA. MH.
BAXTER & WOODMAN EX. VV.
1900
4' DIA. MH.
VV-9
4' DIA. VV.
SN-4
5' DIA. SAN. MH.
SN-3
EX. SAN. MH.
SN-1
4' DIA. SAN. MH.
EX 2" GAS
EX STORM MH.
6' DEPTH (TYPICAL)
EX STORM MH.
EX 12" STORM
SEE DRAINAGE AND UTILITY PLANS FOR MORE DETAILS
EXISTING STORM SEWER, 12"
PR 15" STORM
EXISTING STORM SEWER, 12"
EX 2" GAS
ST-6
4' DIA. MH.
DUCTILE IRON WATER MAIN TEE, 8"X6"
DUCTILE IRON WATER MAIN FITTINGS 8", 45° BEND
MAINTAIN 18" VERTICAL SEPARATION MINIMUM
DUCTILE IRON WATER MAIN TEE, 8"X8"
DUCTILE IRON WATER MAIN TEE, 8"X8"
CONNECTION TO EXISTING WATERMAIN (NON-PRESSURE)
SANITARY SEWERS, PVC, 24" @ 0.50%, 14 LF
SANITARY SEWERS, PVC, 12" @ 0.55%, 276 LF
EXISTING SANITARY SEWER, 48"
SANITARY SEWERS, PVC, 24" @ 0.50%, 48 LF
EXISTING ℄ ELEVATION

522.98 522.44 521.87 521.63 521.33 521.76 520.90 520.70 520.52 520.50 520.55

304+00 304+50 305+00 305+50 306+00 306+50 307+00 307+50 308+00 308+50 309+00

PLAN — SURVEYED / PLOTTED / ALIGNMENT CHECKED / RT. OF WAY CHECKED / CADD FILE NAME / NOTE BOOK NO. / BY / DATE

PROFILE — SURVEYED / PLOTTED / GRADES CHECKED / B.M. NOTED / STRUCTURE NOTATNS CHKD / NOTE BOOK NO. / BY / DATE

MODEL: Default
FILE NAME: pw://transystems-pw.bentley.com:transyscorp-pw1-hosted/Documents/Projects_2018/CH401/40118002/03-WSP/Project_Info/Utilities/CD/-V3-Utilities/62R23-alt-drain5.dgn

V3 Companies
7325 Janes Avenue
Woodridge, IL 60517
630.724.9200 phone
630.724.9202 fax
www.v3co.com

USER NAME = dpung	DESIGNED - CD	REVISED -	
	DRAWN - DP	REVISED -	
PLOT SCALE =	CHECKED - JH	REVISED -	
PLOT DATE = 11/5/2025	DATE - 11/7/2025	REVISED -	

STATE OF ILLINOIS
DEPARTMENT OF TRANSPORTATION

JOLIET DRAINAGE AND UTILITY PLAN & PROFILE

SCALE: 1"=20' | SHEET 5 OF 13 SHEETS | STA. 304+00.00 TO STA. 309+00.00

F.A.I. RTE.	SECTION	COUNTY	TOTAL SHEETS	SHEET NO.
80	FAI 80 21 STRUCTURE 2	WILL	1230	372

CONTRACT NO. 62R23
ILLINOIS | FED. AID PROJECT

SN-5	SN-6
5' DIA. SANITARY MANHOLE	5' DIA. SANITARY MANHOLE
TYPE A, TYPE 1 FRAME, CLOSED LID	TYPE A, TYPE 1 FRAME, CLOSED LID
STA 401+50.00, 8.00' LT	STA 403+60.76, 5.52' RT
RIM = 521.02	RIM = 526.40
PR IE 24" RCP = 507.64 W	PR IE 24" RCP = 508.15 W
PR IE 24" RCP = 507.64 E	PR IE 24" RCP = 508.15 N

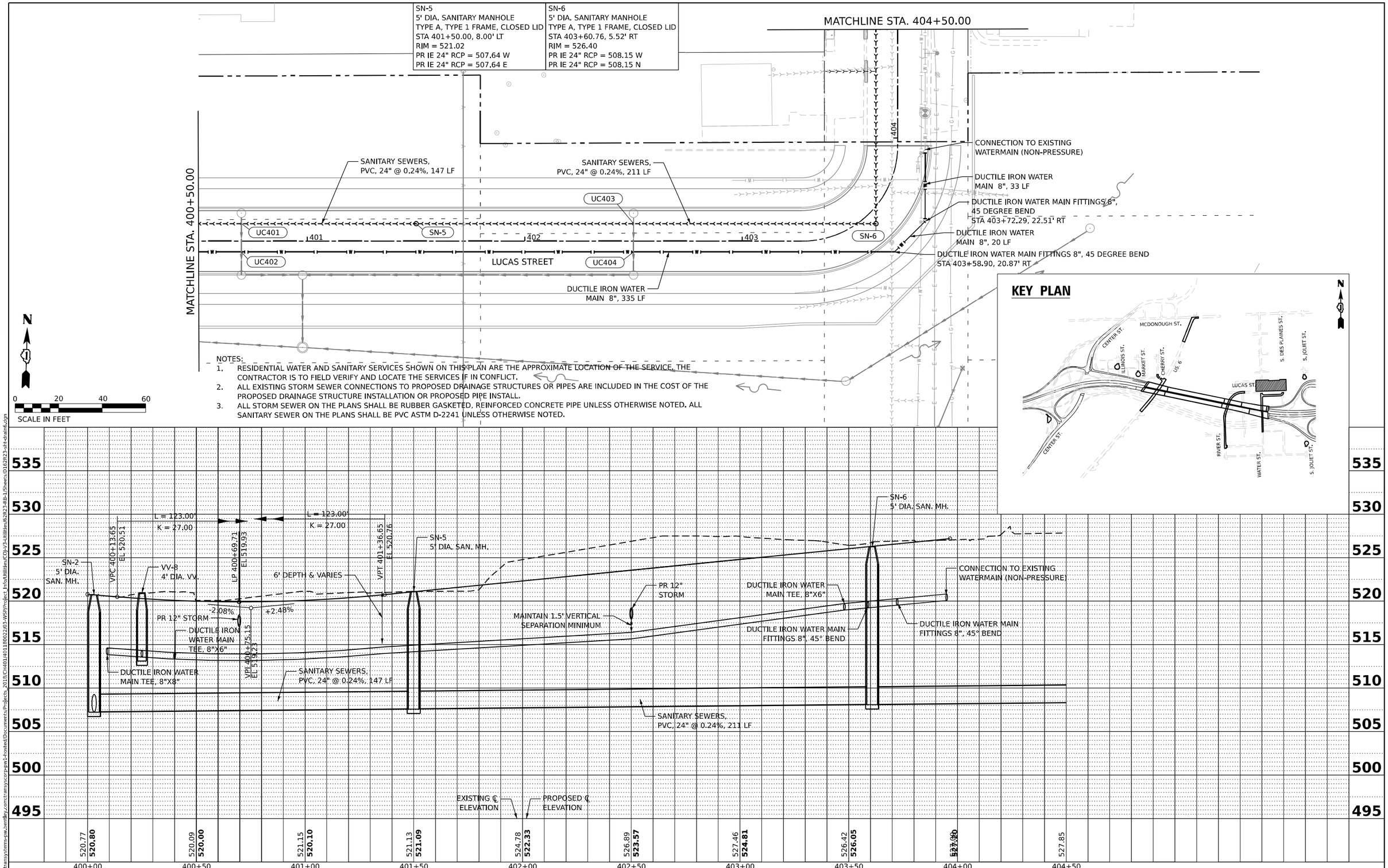

NOTES:

1. RESIDENTIAL WATER AND SANITARY SERVICES SHOWN ON THIS PLAN ARE THE APPROXIMATE LOCATION OF THE SERVICE. THE CONTRACTOR IS TO FIELD VERIFY AND LOCATE THE SERVICES IF IN CONFLICT.
2. ALL EXISTING STORM SEWER CONNECTIONS TO PROPOSED DRAINAGE STRUCTURES OR PIPES ARE INCLUDED IN THE COST OF THE PROPOSED DRAINAGE STRUCTURE INSTALLATION OR PROPOSED PIPE INSTALL.
3. ALL STORM SEWER ON THE PLANS SHALL BE RUBBER GASKETED, REINFORCED CONCRETE PIPE UNLESS OTHERWISE NOTED. ALL SANITARY SEWER ON THE PLANS SHALL BE PVC ASTM D-2241 UNLESS OTHERWISE NOTED.

PLAN — SURVEYED / PLOTTED / ALIGNMENT CHECKED / RT. OF WAY CHECKED / CADD FILE NAME — NOTE BOOK NO. — BY — DATE

PROFILE — SURVEYED / PLOTTED / GRADES CHECKED / B.M. NOTED / STRUCTURE NOTATNS CHKD — NOTE BOOK NO. — BY — DATE

MODEL: Default
FILE NAME: pw://transystems-pw.bentley.com:transyscorp-pw1-hosted/Documents/Projects_2018/CH401/40118002/03-WSP/Project_Info/Utilities/CD/-V3-Utilities/62R23-ut-drainfo.dgn

V3 Companies
7325 Janes Avenue
Woodridge, IL 60517
630.724.9200 phone
630.724.9202 fax
www.v3co.com

USER NAME = dpung	DESIGNED - CD	REVISED -	
	DRAWN - DP	REVISED -	
PLOT SCALE =	CHECKED - JH	REVISED -	
PLOT DATE = 11/5/2025	DATE - 11/7/2025	REVISED -	

STATE OF ILLINOIS
DEPARTMENT OF TRANSPORTATION

JOLIET DRAINAGE AND UTILITY PLAN & PROFILE

SCALE: 1"=20' | SHEET 6 OF 13 SHEETS | STA. 400+50.00 TO STA. 405+50.00

F.A.I. RTE.	SECTION	COUNTY	TOTAL SHEETS	SHEET NO.
80	FAI 80 21 STRUCTURE 2	WILL	1230	373

CONTRACT NO. 62R23

ILLINOIS | FED. AID PROJECT

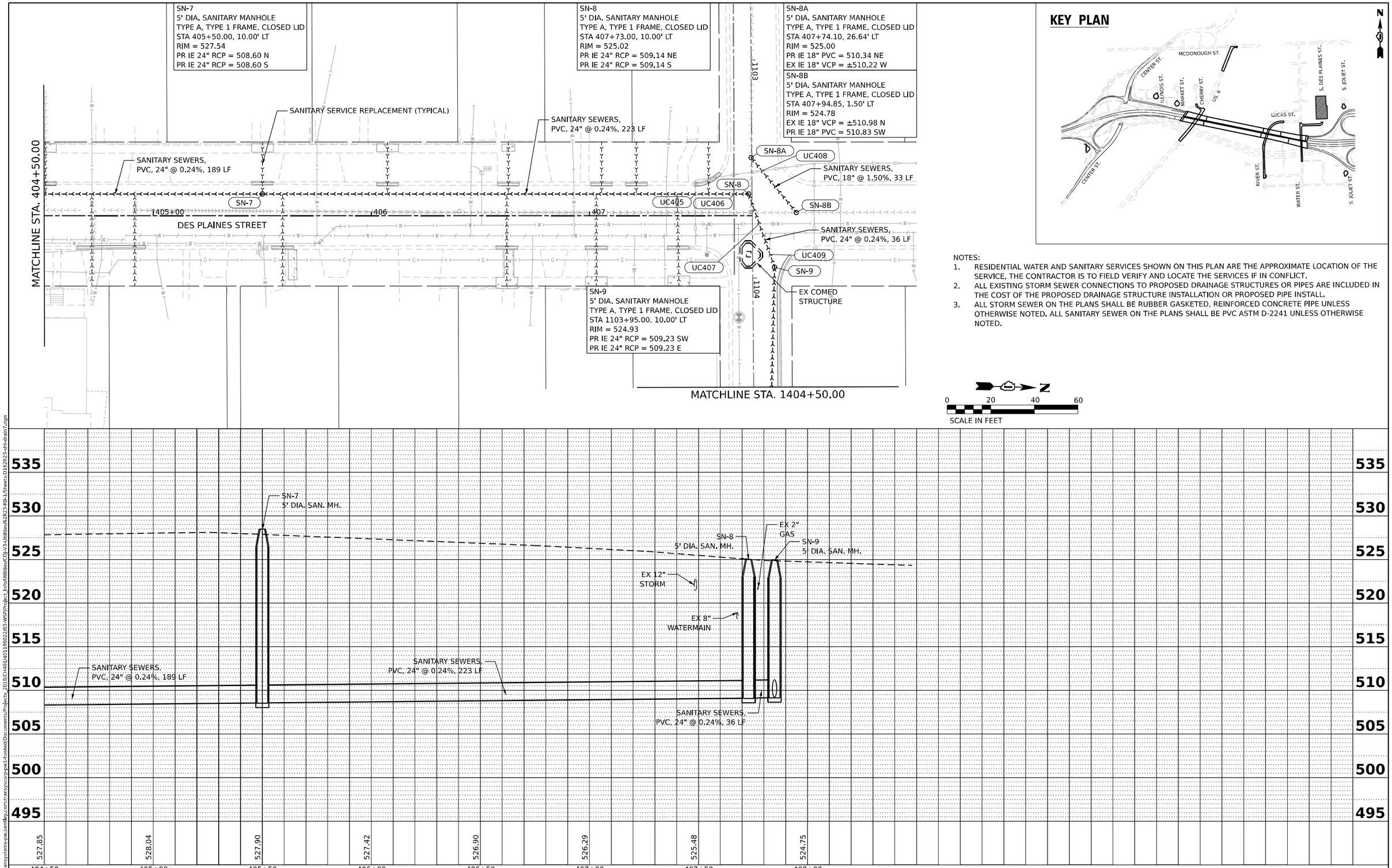

KEY PLAN

NOTES:

1. RESIDENTIAL WATER AND SANITARY SERVICES SHOWN ON THIS PLAN ARE THE APPROXIMATE LOCATION OF THE SERVICE. THE CONTRACTOR IS TO FIELD VERIFY AND LOCATE THE SERVICES IF IN CONFLICT.
2. ALL EXISTING STORM SEWER CONNECTIONS TO PROPOSED DRAINAGE STRUCTURES OR PIPES ARE INCLUDED IN THE COST OF THE PROPOSED DRAINAGE STRUCTURE INSTALLATION OR PROPOSED PIPE INSTALL.
3. ALL STORM SEWER ON THE PLANS SHALL BE RUBBER GASKETED, REINFORCED CONCRETE PIPE UNLESS OTHERWISE NOTED. ALL SANITARY SEWER ON THE PLANS SHALL BE PVC ASTM D-2241 UNLESS OTHERWISE NOTED.

PLAN — SURVEYED / PLOTTED / ALIGNMENT CHECKED / RT. OF WAY CHECKED / CADD FILE NAME — NOTE BOOK NO. — BY — DATE

PROFILE — SURVEYED / PLOTTED / GRADES CHECKED / B.M. NOTED / STRUCTURE NOTAT'NS CH'KD — NOTE BOOK NO. — BY — DATE

MODEL: Default
FILE NAME: pw://transystems-pw.bentley.com:transyscorp-pw1-hosted/Documents/Projects_2018/CH401/40118002/03-WSP/Project_Info/Utilities/CD/-V3-Utilities/62R23-RB-1/Sheets/D162R23-sht-drain7.dgn

V3 Companies
7325 Janes Avenue
Woodridge, IL 60517
630.724.9200 phone
630.724.9202 fax
www.v3co.com

USER NAME = dpung	DESIGNED - CD	REVISED -	
	DRAWN - DP	REVISED -	
PLOT SCALE =	CHECKED - JH	REVISED -	
PLOT DATE = 11/5/2025	DATE - 11/7/2025	REVISED -	

STATE OF ILLINOIS
DEPARTMENT OF TRANSPORTATION

JOLIET DRAINAGE AND UTILITY PLAN & PROFILE

SCALE: 1"=20' | SHEET 7 OF 13 SHEETS | STA. 404+50.00 TO STA. 408+00.00

F.A.I. RTE.	SECTION	COUNTY	TOTAL SHEETS	SHEET NO.
80	FAI 80 21 STRUCTURE 2	WILL	1230	374

CONTRACT NO. 62R23

ILLINOIS | FED. AID PROJECT

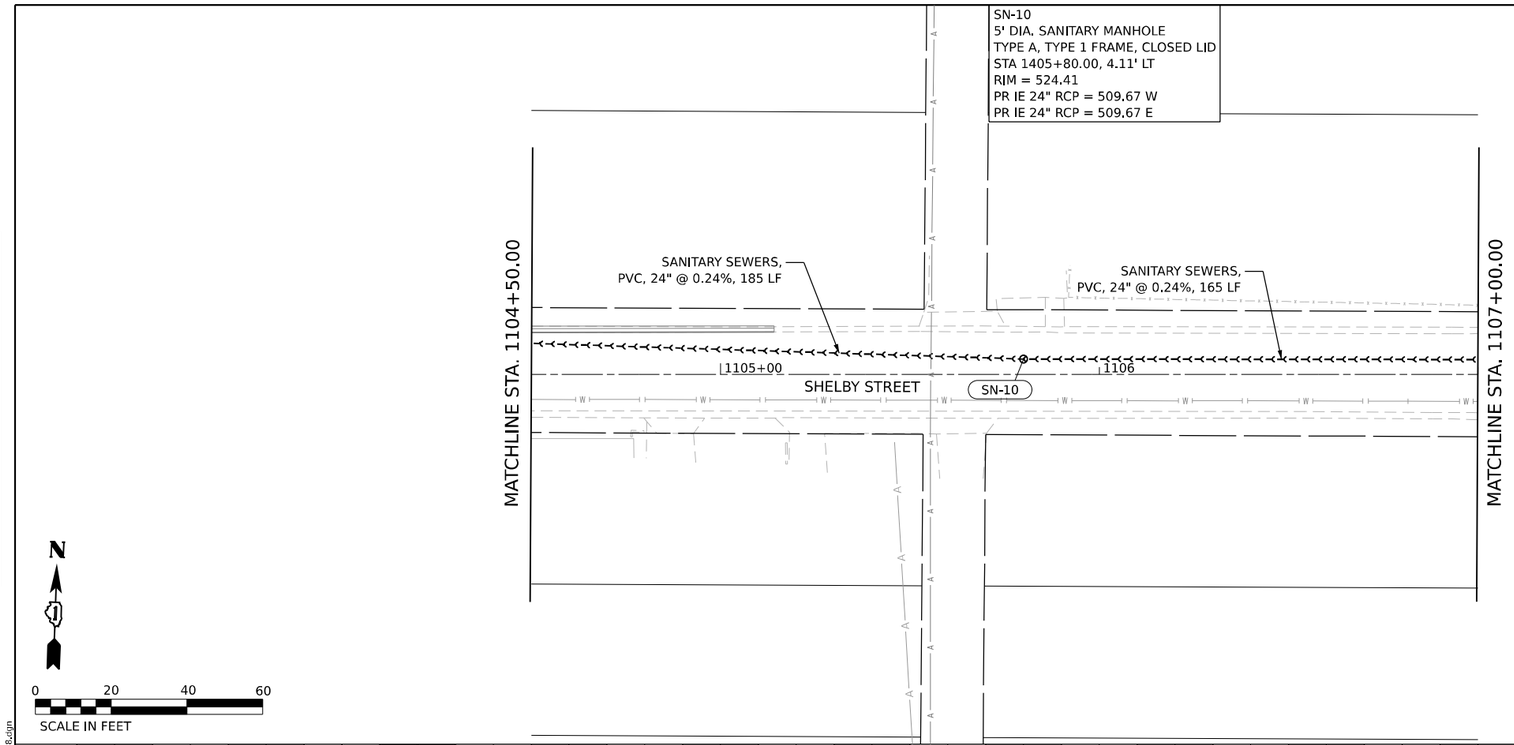

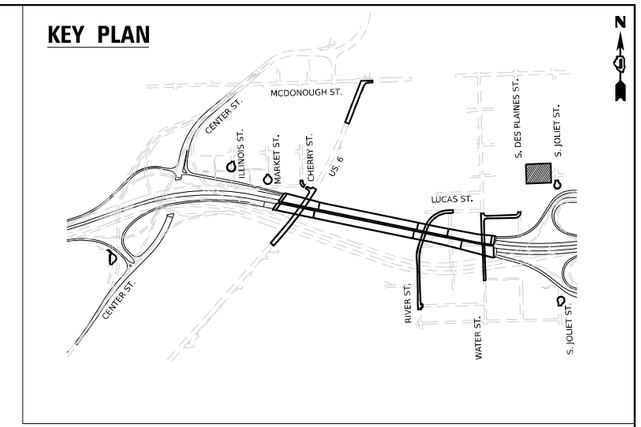

NOTES:

1. RESIDENTIAL WATER AND SANITARY SERVICES SHOWN ON THIS PLAN ARE THE APPROXIMATE LOCATION OF THE SERVICE. THE CONTRACTOR IS TO FIELD VERIFY AND LOCATE THE SERVICES IF IN CONFLICT.
2. ALL EXISTING STORM SEWER CONNECTIONS TO PROPOSED DRAINAGE STRUCTURES OR PIPES ARE INCLUDED IN THE COST OF THE PROPOSED DRAINAGE STRUCTURE INSTALLATION OR PROPOSED PIPE INSTALL.
3. ALL STORM SEWER ON THE PLANS SHALL BE RUBBER GASKETED, REINFORCED CONCRETE PIPE UNLESS OTHERWISE NOTED. ALL SANITARY SEWER ON THE PLANS SHALL BE PVC ASTM D-2241 UNLESS OTHERWISE NOTED.

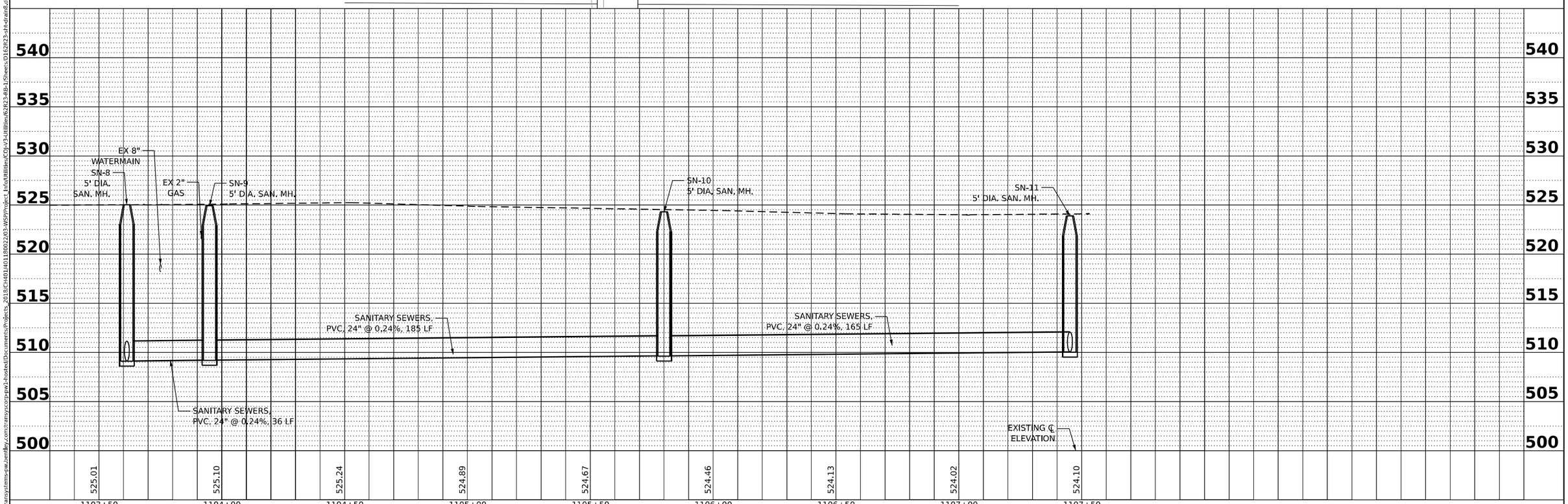

PLAN	BY	DATE
SURVEYED		
PLOTTED		
ALIGNMENT CHECKED		
RT. OF WAY CHECKED		
CADD FILE NAME		
NOTE BOOK NO.		

PROFILE	BY	DATE
SURVEYED		
PLOTTED		
GRADES CHECKED		
B.M. NOTED		
STRUCTURE NOTATNS CHKD		
NOTE BOOK NO.		

MODEL: Default
FILE NAME: pw://transystems-pw.bentley.com:transyscorp-pw1-hosted/Documents/Projects_2018/CH401/401180022/03-WSP/Project_Info/Utilities/CO)-V3-Utilities/62R23-RB-1/Sheets/D1E2R23-sht-drain8.dgn

V3 Companies
7325 Janes Avenue
Woodridge, IL 60517
630.724.9200 phone
630.724.9202 fax
www.v3co.com

USER NAME = dpung	DESIGNED - CD	REVISED -	
	DRAWN - DP	REVISED -	
PLOT SCALE =	CHECKED - JH	REVISED -	
PLOT DATE = 11/5/2025	DATE - 11/7/2025	REVISED -	

STATE OF ILLINOIS
DEPARTMENT OF TRANSPORTATION

JOLIET DRAINAGE AND UTILITY PLAN & PROFILE

SCALE: 1"=20' | SHEET 8 OF 13 SHEETS | STA. 1104+50.00 TO STA. 1107+00.00

F.A.I. RTE.	SECTION	COUNTY	TOTAL SHEETS	SHEET NO.
80	FAI 80 21 STRUCTURE 2	WILL	1230	375

CONTRACT NO. 62R23

ILLINOIS | FED. AID PROJECT

NOTES:

1. RESIDENTIAL WATER AND SANITARY SERVICES SHOWN ON THIS PLAN ARE THE APPROXIMATE LOCATION OF THE SERVICE. THE CONTRACTOR IS TO FIELD VERIFY AND LOCATE THE SERVICES IF IN CONFLICT.
2. ALL EXISTING STORM SEWER CONNECTIONS TO PROPOSED DRAINAGE STRUCTURES OR PIPES ARE INCLUDED IN THE COST OF THE PROPOSED DRAINAGE STRUCTURE INSTALLATION OR PROPOSED PIPE INSTALL.
3. ALL STORM SEWER ON THE PLANS SHALL BE RUBBER GASKETED, REINFORCED CONCRETE PIPE UNLESS OTHERWISE NOTED. ALL SANITARY SEWER ON THE PLANS SHALL BE PVC ASTM D-2241 UNLESS OTHERWISE NOTED.

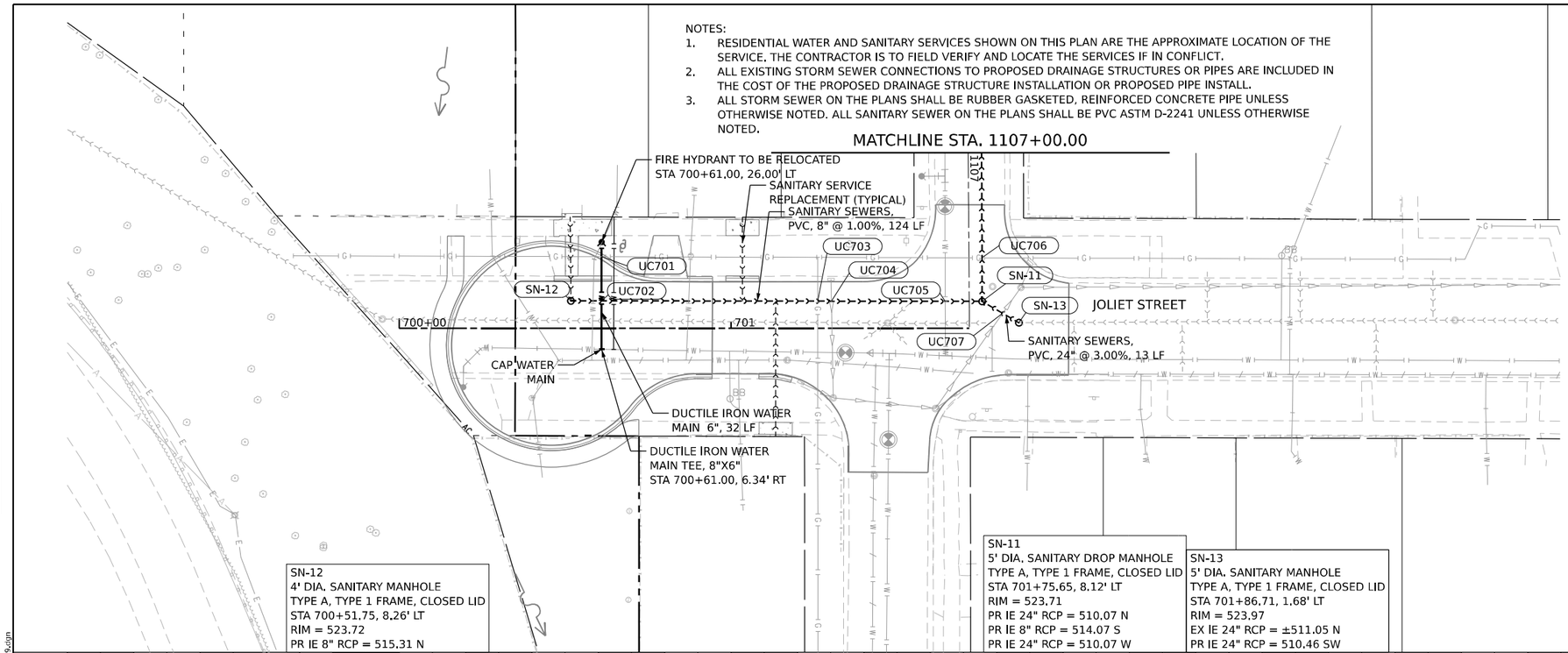

KEY PLAN

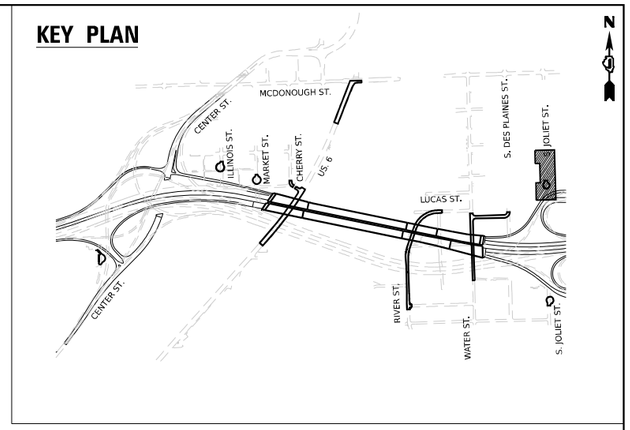

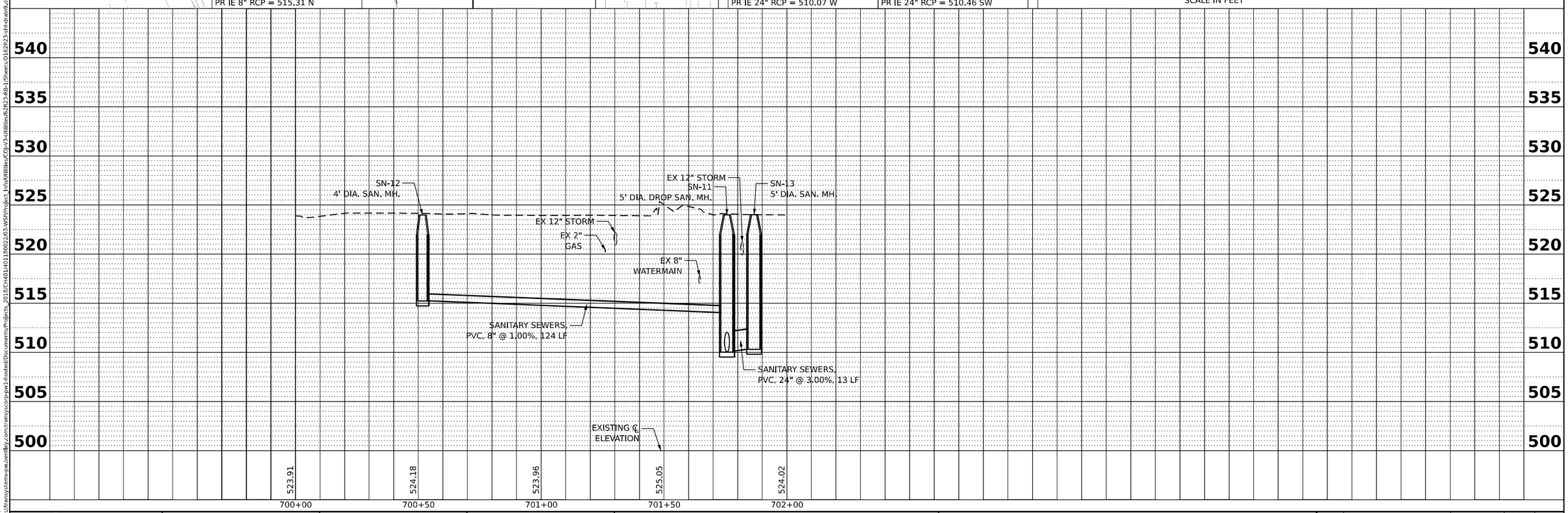

PLAN	BY	DATE
SURVEYED		
PLOTTED		
ALIGNMENT CHECKED		
RT. OF WAY CHECKED		
CADD FILE NAME		
NOTE BOOK NO.		

PROFILE	BY	DATE
SURVEYED		
PLOTTED		
ALIGNMENTS CHECKED		
B.M. NOTED		
STRUCTURE NOTATNS CHKD		
NOTE BOOK NO.		

MODEL: Default
FILE NAME: pw://transystems-pw.bentley.com:transyscorp-pw1-hosted/Documents/Projects_2018/CH401/401180022/03-WSP/Project_Info/Utilities/CO)-V3-Utilities/62R23-RB-1/Sheets/D162R23-sht-drain9.dgn

V3 Companies
7325 Janes Avenue
Woodridge, IL 60517
630.724.9200 phone
630.724.9202 fax
www.v3co.com

USER NAME = dpung	DESIGNED - CD	REVISED -	
	DRAWN - DP	REVISED -	
PLOT SCALE =	CHECKED - JH	REVISED -	
PLOT DATE = 11/5/2025	DATE - 11/7/2025	REVISED -	

STATE OF ILLINOIS
DEPARTMENT OF TRANSPORTATION

JOLIET DRAINAGE AND UTILITY PLAN & PROFILE

SCALE: 1"=20' | SHEET 9 OF 13 SHEETS | STA. 700+00.00 TO STA. 702+00.00

F.A.I. RTE.	SECTION	COUNTY	TOTAL SHEETS	SHEET NO.
80	FAI 80 21 STRUCTURE 2	WILL	1230	376

CONTRACT NO. 62R23

ILLINOIS | FED. AID PROJECT

SN-15	SN-16
4' DIA. SANITARY MANHOLE	4' DIA. SANITARY MANHOLE
TYPE A, TYPE 1 FRAME, CLOSED LID	TYPE A, TYPE 1 FRAME, CLOSED LID
STA 2002+00.00, 30.00' LT	STA 2003+69.86, 29.92' LT
RIM = 524.03	RIM = 522.57
PR IE 12" PVC= 510.80 E	EX IE 15" VCP= ±511.29 S
PR IE 12" RCP = 510.80 W	PR IE 12" PVC = 511.29 W

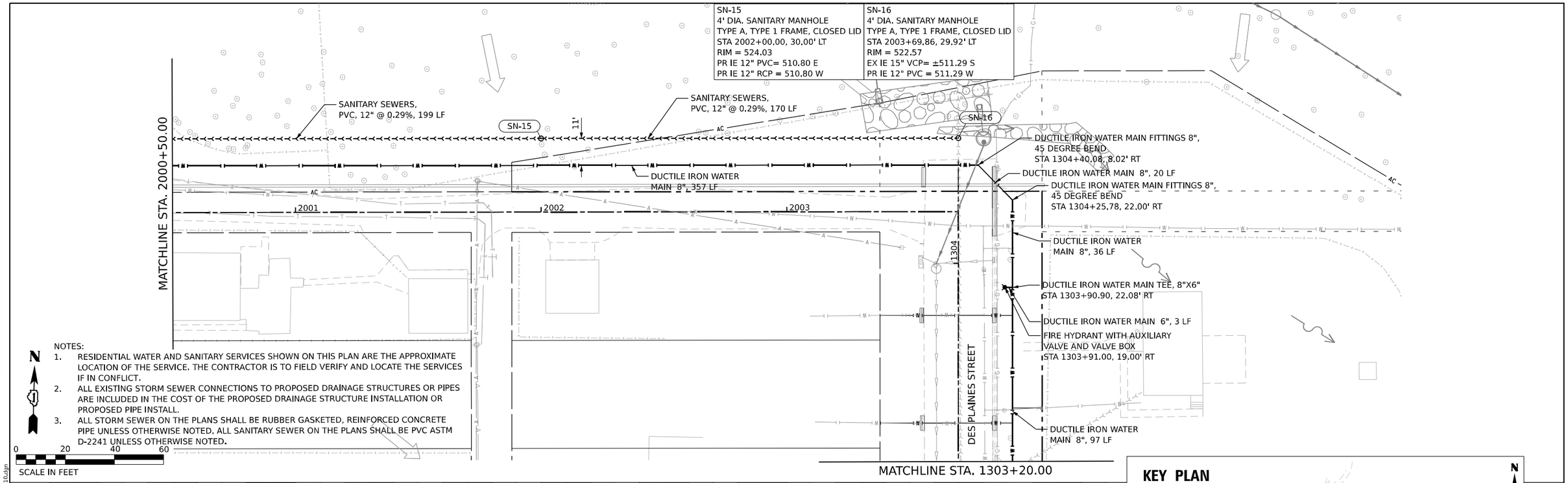

NOTES:

1. RESIDENTIAL WATER AND SANITARY SERVICES SHOWN ON THIS PLAN ARE THE APPROXIMATE LOCATION OF THE SERVICE. THE CONTRACTOR IS TO FIELD VERIFY AND LOCATE THE SERVICES IF IN CONFLICT.
2. ALL EXISTING STORM SEWER CONNECTIONS TO PROPOSED DRAINAGE STRUCTURES OR PIPES ARE INCLUDED IN THE COST OF THE PROPOSED DRAINAGE STRUCTURE INSTALLATION OR PROPOSED PIPE INSTALL.
3. ALL STORM SEWER ON THE PLANS SHALL BE RUBBER GASKETED, REINFORCED CONCRETE PIPE UNLESS OTHERWISE NOTED. ALL SANITARY SEWER ON THE PLANS SHALL BE PVC ASTM D-2241 UNLESS OTHERWISE NOTED.

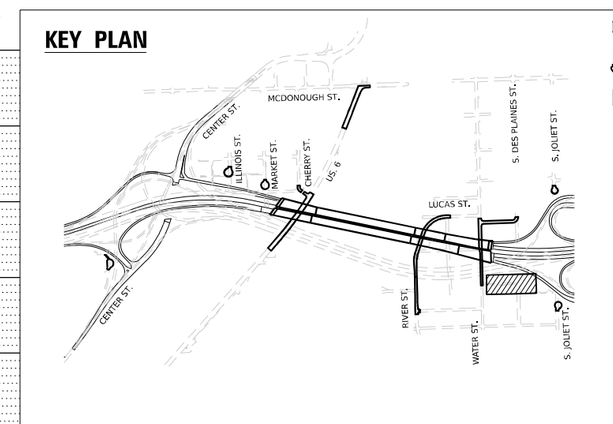

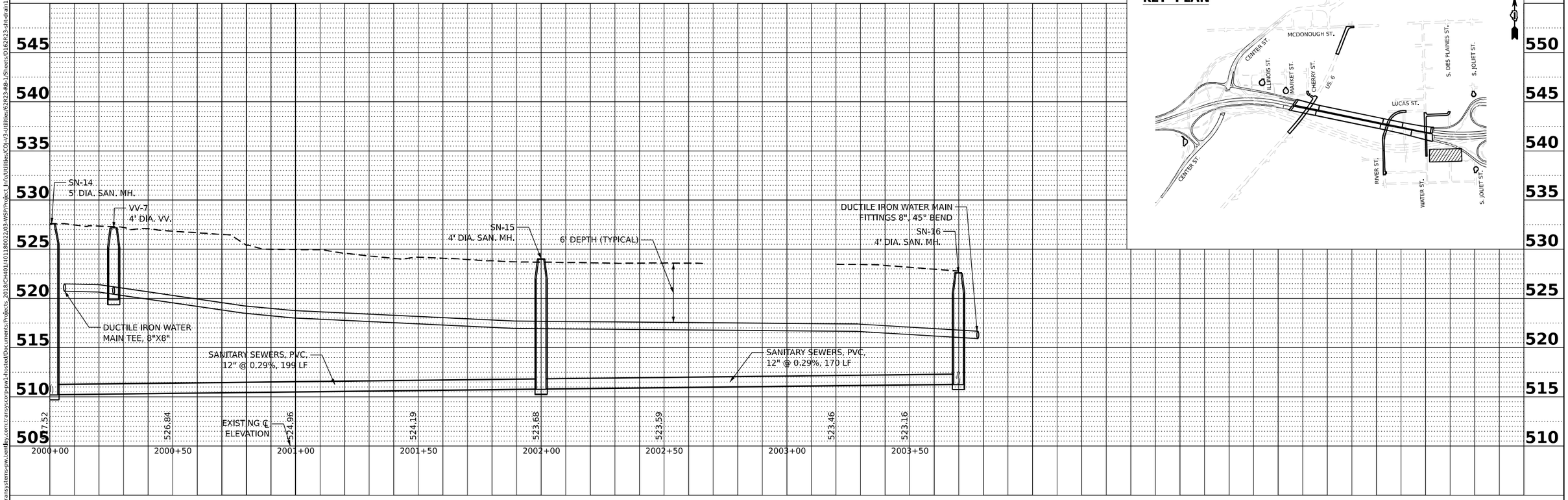

PLAN — SURVEYED / PLOTTED / ALIGNMENT CHECKED / RT. OF WAY CHECKED / CADD FILE NAME — NOTE BOOK NO. — BY — DATE

PROFILE — SURVEYED / PLOTTED / PROFILE CHECKED / B.M. NOTED / STRUCTURE NOTATNS CHKD — NOTE BOOK NO. — BY — DATE

MODEL: Default
FILE NAME: pw://transystems-pw.bentley.com:transyscorp-pw1-hosted/Documents/Projects_2018/CH401/401180022/03-WSP/Project_Info/Utilities/CO-V3-Utilities/62R23-RB-1/Sheets/D1E2R23-sht-drain10.dgn

V3 Companies
7325 Janes Avenue
Woodridge, IL 60517
630.724.9200 phone
630.724.9202 fax
www.v3co.com

USER NAME = dpung	DESIGNED - CD	REVISED -	
	DRAWN - DP	REVISED -	
PLOT SCALE =	CHECKED - JH	REVISED -	
PLOT DATE = 11/5/2025	DATE - 11/7/2025	REVISED -	

STATE OF ILLINOIS
DEPARTMENT OF TRANSPORTATION

JOLIET DRAINAGE AND UTILITY PLAN & PROFILE

SCALE: 1"=20' | SHEET 10 OF 13 SHEETS | STA. 2000+50.00 TO STA. 2003+70.00

F.A.I. RTE.	SECTION	COUNTY	TOTAL SHEETS	SHEET NO.
80	FAI 80 21 STRUCTURE 2	WILL	1230	377

CONTRACT NO. 62R23

ILLINOIS | FED. AID PROJECT

MATCHLINE STA. 1303+20.00

N

0 20 40 60

SCALE IN FEET

DUCTILE IRON WATER MAIN 8", 10 LF

DUCTILE IRON WATER MAIN TEE, 8"X8" STA 1302+82.88, 22.00' RT

DUCTILE IRON WATER MAIN 8", 10 LF

DUCTILE IRON WATER MAIN REDUCER, 10"X8"

CONNECTION TO EXISTING WATERMAIN (NON-PRESSURE)

VV-14

DUCTILE IRON WATER MAIN 8", 6 LF

VV-13

VV-12

DUCTILE IRON WATER MAIN 8", 13 LF

DUCTILE IRON WATER MAIN FITTINGS 8", 45 DEGREE BEND STA 1302+60.03, 22.00' RT

DUCTILE IRON WATER MAIN 8", 15 LF

UC1301

DUCTILE IRON WATER MAIN 8", 175 LF

DUCTILE IRON WATER MAIN FITTINGS 8", 45 DEGREE BEND STA 602+82.64, 179.88' LT

DUCTILE IRON WATER MAIN 8", 62 LF

DUCTILE IRON WATER MAIN FITTINGS 8", 45 DEGREE BEND STA 602+38.96, 136.15' LT

DUCTILE IRON WATER MAIN 8", 132 LF

DUCTILE IRON WATER MAIN FITTINGS 8", 45 DEGREE BEND STA 602+39.21, 4.07' LT

UC601

UC602

DUCTILE IRON WATER MAIN 8", 20 LF

DUCTILE IRON WATER MAIN FITTINGS 8", 45 DEGREE BEND STA 602+25.09, 10.09' RT

CONNECTION TO EXISTING WATERMAIN (NON-PRESSURE)

I 303

I 302

I 602

JOLIET STREET

AC

VV-14
4' DIA. VALVE VAULT
TYPE A, TYPE 1 FRAME, CLOSED LID
STA 1302+93.26, 22.00' RT
RIM = 522.73
GATE VALVE, 8"
VV-13
4' DIA. VALVE VAULT
TYPE A, TYPE 1 FRAME, CLOSED LID
STA 1302+82.88, 28.00' RT
RIM = 522.86
GATE VALVE, 8"
VV-12
4' DIA. VALVE VAULT
TYPE A, TYPE 1 FRAME, CLOSED LID
STA 1302+73.26, 22.00' RT
RIM = 522.67
GATE VALVE, 8"

NOTES:

1. RESIDENTIAL WATER AND SANITARY SERVICES SHOWN ON THIS PLAN ARE THE APPROXIMATE LOCATION OF THE SERVICE. THE CONTRACTOR IS TO FIELD VERIFY AND LOCATE THE SERVICES IF IN CONFLICT.
2. ALL EXISTING STORM SEWER CONNECTIONS TO PROPOSED DRAINAGE STRUCTURES OR PIPES ARE INCLUDED IN THE COST OF THE PROPOSED DRAINAGE STRUCTURE INSTALLATION OR PROPOSED PIPE INSTALL.
3. ALL STORM SEWER ON THE PLANS SHALL BE RUBBER GASKETED, REINFORCED CONCRETE PIPE UNLESS OTHERWISE NOTED. ALL SANITARY SEWER ON THE PLANS SHALL BE PVC ASTM D-2241 UNLESS OTHERWISE NOTED.

KEY PLAN

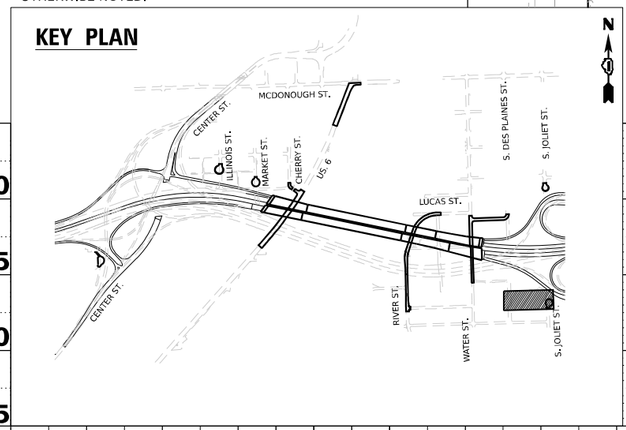

PLAN

SURVEYED
PLOTTED
ALIGNMENT CHECKED
RT. OF WAY CHECKED
CADD FILE NAME

NOTE BOOK NO.

BY

DATE

PROFILE

SURVEYED
PLOTTED
GRADES CHECKED
B.M. NOTED
STRUCTURE NOTAT'NS CH'KD

NOTE BOOK NO.

BY

DATE

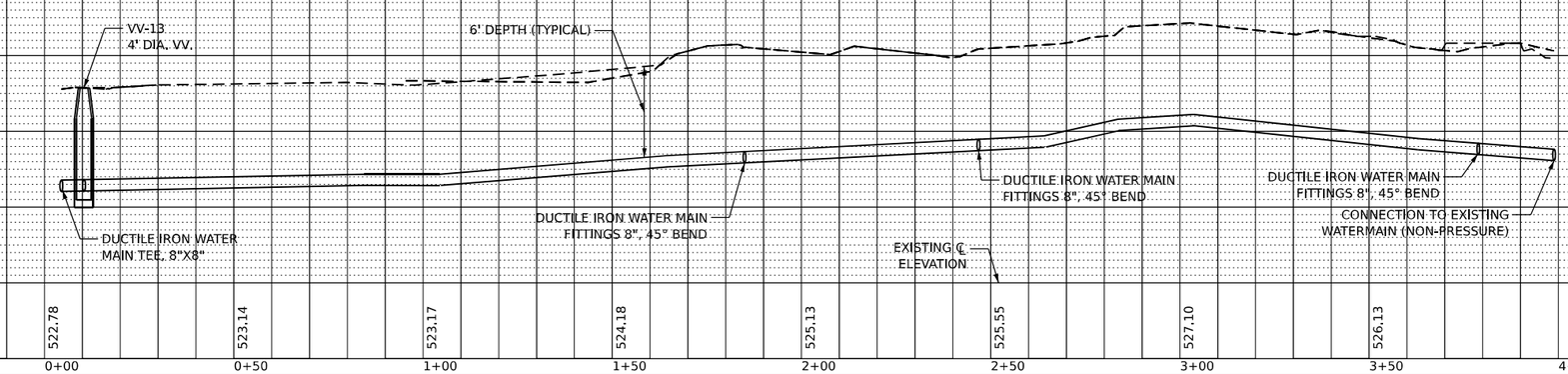

MODEL: Default
FILE NAME: pw://transystems-pw.bentley.com:transyscorp-pw1-hosted/Documents/Projects_2018/CH401/401180022/03-WSP/Project_Info/Utilities/62R23-4B-1/Sheets/D162R23-sht-drain11.dgn

V3 Companies
7325 Janes Avenue
Woodridge, IL 60517
630.724.9200 phone
630.724.9202 fax
www.v3co.com

USER NAME = dpung	DESIGNED - CD	REVISED -	
	DRAWN - DP	REVISED -	
PLOT SCALE =	CHECKED - JH	REVISED -	
PLOT DATE = 11/5/2025	DATE - 11/7/2025	REVISED -	

STATE OF ILLINOIS
DEPARTMENT OF TRANSPORTATION

JOLIET DRAINAGE AND UTILITY PLAN & PROFILE

SCALE: 1"=20' | SHEET 11 OF 13 SHEETS | STA. TO STA.

F.A.I. RTE.	SECTION	COUNTY	TOTAL SHEETS	SHEET NO.
80	FAI 80 21 STRUCTURE 2	WILL	1230	378

CONTRACT NO. 62R23

ILLINOIS | FED. AID PROJECT

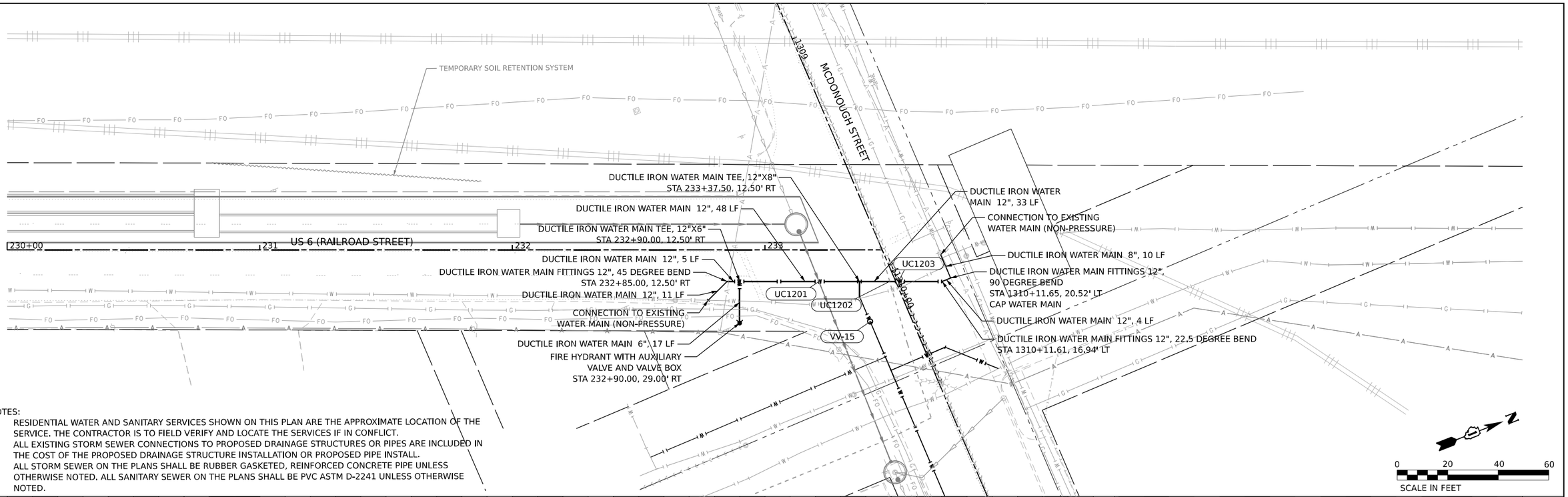

NOTES:

1. RESIDENTIAL WATER AND SANITARY SERVICES SHOWN ON THIS PLAN ARE THE APPROXIMATE LOCATION OF THE SERVICE. THE CONTRACTOR IS TO FIELD VERIFY AND LOCATE THE SERVICES IF IN CONFLICT.
2. ALL EXISTING STORM SEWER CONNECTIONS TO PROPOSED DRAINAGE STRUCTURES OR PIPES ARE INCLUDED IN THE COST OF THE PROPOSED DRAINAGE STRUCTURE INSTALLATION OR PROPOSED PIPE INSTALL.
3. ALL STORM SEWER ON THE PLANS SHALL BE RUBBER GASKETED, REINFORCED CONCRETE PIPE UNLESS OTHERWISE NOTED. ALL SANITARY SEWER ON THE PLANS SHALL BE PVC ASTM D-2241 UNLESS OTHERWISE NOTED.

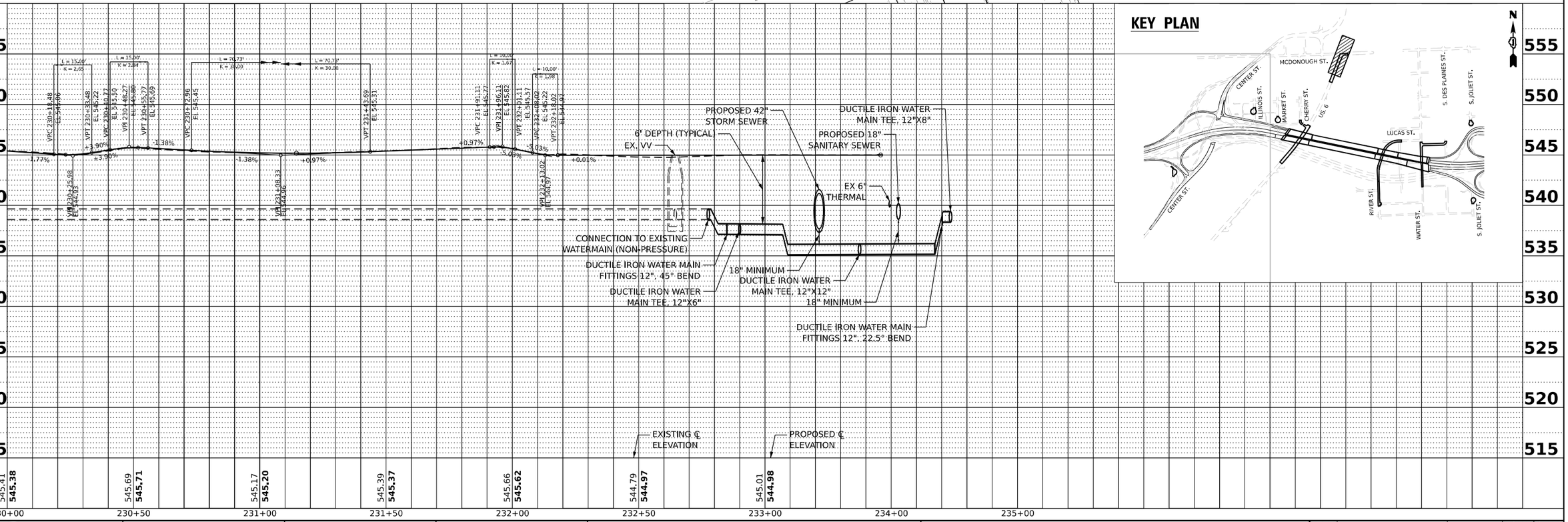

KEY PLAN

PLAN
NOTE BOOK NO.
SURVEYED
PLOTTED
ALIGNMENT CHECKED
RT. OF WAY CHECKED
CADD FILE NAME
BY
DATE

PROFILE
NOTE BOOK NO.
SURVEYED
PLOTTED
GRADES CHECKED
B.M. NOTED
STRUCTURE NOTATNS CHKD
BY
DATE

MODEL: Default
FILE NAME: pw://transystems-pw.bentley.com:transyscorp-pw1-hosted/Documents/Projects_2018/CH401/401180022/03-WSP/Project_Info/Utilities/CO-V3-Utilities/62R23-RB-1/Sheets/D1E2R23-sht-drain12.dgn

V3 Companies
7325 Janes Avenue
Woodridge, IL 60517
630.724.9200 phone
630.724.9202 fax
www.v3co.com

USER NAME = dpung	DESIGNED - CD	REVISED -	
	DRAWN - DP	REVISED -	
PLOT SCALE =	CHECKED - JH	REVISED -	
PLOT DATE = 11/5/2025	DATE - 11/7/2025	REVISED -	

STATE OF ILLINOIS
DEPARTMENT OF TRANSPORTATION

JOLIET DRAINAGE AND UTILITY PLAN & PROFILE

SCALE: 1"=20' | SHEET 12 OF 13 SHEETS | STA. 100+00.00 TO STA. 105+00.00

F.A.I. RTE.	SECTION	COUNTY	TOTAL SHEETS	SHEET NO.
80	FAI 80 21 STRUCTURE 2	WILL	1230	379

CONTRACT NO. 62R23

ILLINOIS | FED. AID PROJECT

NOTES:

1. RESIDENTIAL WATER AND SANITARY SERVICES SHOWN ON THIS PLAN ARE THE APPROXIMATE LOCATION OF THE SERVICE. THE CONTRACTOR IS TO FIELD VERIFY AND LOCATE THE SERVICES IF IN CONFLICT.
2. ALL EXISTING STORM SEWER CONNECTIONS TO PROPOSED DRAINAGE STRUCTURES OR PIPES ARE INCLUDED IN THE COST OF THE PROPOSED DRAINAGE STRUCTURE INSTALLATION OR PROPOSED PIPE INSTALL.
3. ALL STORM SEWER ON THE PLANS SHALL BE RUBBER GASKETED, REINFORCED CONCRETE PIPE UNLESS OTHERWISE NOTED. ALL SANITARY SEWER ON THE PLANS SHALL BE PVC ASTM D-2241 UNLESS OTHERWISE NOTED.

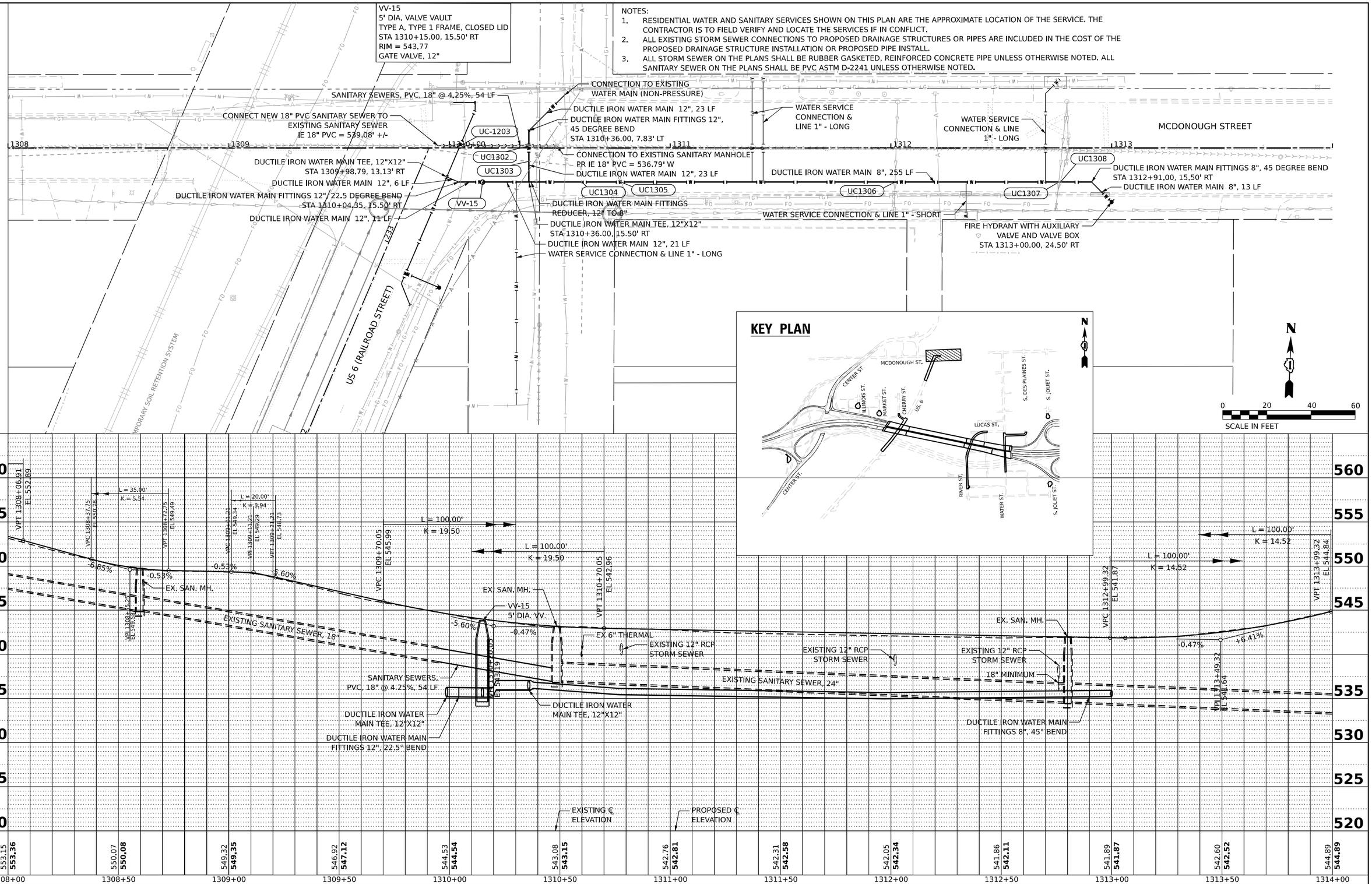

PLAN
NOTE BOOK NO.
SURVEYED
PLOTTED
ALIGNMENT CHECKED
RT. OF WAY CHECKED
CADD FILE NAME
BY
DATE

PROFILE
NOTE BOOK NO.
SURVEYED
PLOTTED
GRADES CHECKED
B.M. NOTED
STRUCTURE NOTATNS CH'KD
BY
DATE

MODEL: Default
FILE NAME: pw://transystems-pw.bentley.com:transyscorp-pw1-hosted/Documents/Projects_2018/CH401/40118002203-WSP/Project_Info/Utilities/CD/-V3-Utilities/62R23-RB-1/Sheets/D162R23-sht-drain13.dgn

V3 Companies
7325 Janes Avenue
Woodridge, IL 60517
630.724.9200 phone
630.724.9202 fax
www.v3co.com

USER NAME = dpung	DESIGNED - CD	REVISED -	
	DRAWN - DP	REVISED -	
PLOT SCALE =	CHECKED - JH	REVISED -	
PLOT DATE = 11/5/2025	DATE - 11/7/2025	REVISED -	

STATE OF ILLINOIS
DEPARTMENT OF TRANSPORTATION

JOLIET DRAINAGE AND UTILITY PLAN & PROFILE

SCALE: 1"=20' | SHEET 13 OF 13 SHEETS | STA. 100+00.00 TO STA. 105+00.00

F.A.I. RTE.	SECTION	COUNTY	TOTAL SHEETS	SHEET NO.
80	FAI 80 21 STRUCTURE 2	WILL	1230	380

CONTRACT NO. 62R23

ILLINOIS | FED. AID PROJECT

LUCAS AVENUE UTILITY CROSSING TABLE

CROSSING NUMBER	LOCATION		PIPE INFORMATION			INVERT ELEVATION	OUTER ELEVATION	CLEARANCE (FEET)
	STATION	OFFSET	STATUS	SIZE	TYPE			
UC101	100+93.04	8.88' LT	EXISTING	15" RCP	STORM	514.81	514.62 BP	1.86
			PROPOSED	8" DIP	WATER	512.05	512.76 TP	
UC102	100+93.06	1.24' RT	EXISTING	8" PVC	SANITARY	514.30	514.26 BP	1.50
			PROPOSED	8" DIP	WATER	512.05	512.76 TP	
UC103	100+88.95	24.69' RT	EXISTING	12" RCP	STORM	515.55	515.38 BP	1.95
			PROPOSED	8" DIP	WATER	512.72	513.43 TP	
UC104	104+79.61	24.19' LT	PROPOSED	15" RCP	STORM	515.83	515.64 BP	1.90
			PROPOSED	8" DIP	WATER	513.03	513.74 TP	
UC105	111+82.00	9.80' RT	PROPOSED	12" RCP	STORM	516.72	516.55 BP	9.43
			EXISTING	48" RCP	SANITARY	502.70	507.12 TP	
UC106	113+59.01	10.80' RT	PROPOSED	12" RCP	STORM	513.60	513.43 BP	6.06
			EXISTING	48" RCP	SANITARY	502.95	507.37 TP	
UC107	113+59.00	21.00' RT	PROPOSED	12" RCP	STORM	513.66	513.49 BP	1.50
			PROPOSED	8" DIP	WATER	511.28	511.99 TP	

LEGEND: TP = TOP OF PIPE, BP = BOTTOM OF PIPE, DIP = DUCTILE IRON PIPE, RCP = REINFORCED CONCRETE PIPE, PVC = POLYVINYL CHLORIDE, VCP = VITRIFIED CLAY PIPE

DES PLAINES STREET (NORTH) UTILITY CROSSING TABLE

CROSSING NUMBER	LOCATION		PIPE INFORMATION			INVERT ELEVATION	OUTER ELEVATION	CLEARANCE (FEET)
	STATION	OFFSET	STATUS	SIZE	TYPE			
UC401	400+69.72	8.00' LT	PROPOSED	12" RCP	STORM	517.38	517.21 BP	7.72
			PROPOSED	24" PVC	SANITARY	507.45	509.49 TP	
UC402	400+69.71	5.00' RT	PROPOSED	12" RCP	STORM	517.26	517.09 BP	1.92
			PROPOSED	8" DIP	WATER	514.46	515.17 TP	
UC403	402+50.04	8.00' LT	PROPOSED	12" RCP	STORM	518.22	518.05 BP	8.13
			PROPOSED	24" PVC	SANITARY	507.88	509.92 TP	
UC404	402+50.02	5.00' RT	PROPOSED	12" RCP	STORM	518.08	517.91 BP	1.50
			PROPOSED	8" DIP	WATER	515.70	516.41 TP	
UC405	407+48.60	10.00' LT	EXISTING	12" RCP	STORM	521.62	521.45 BP	10.33
			PROPOSED	24" PVC	SANITARY	509.08	511.12 TP	
UC406	407+66.30	10.00' LT	EXISTING	4"	ELECTRIC	522.16	522.12 BP	10.96
			PROPOSED	24" PVC	SANITARY	509.12	511.16 TP	
UC407	407+77.85	3.72' RT	EXISTING	8" DIP	WATER	518.75	518.71 BP	7.49
			PROPOSED	24" PVC	SANITARY	509.18	511.22 TP	
UC408	407+79.08	20.61' LT	EXISTING	12" RCP	STORM	521.30	521.13 BP	9.17
			PROPOSED	18" PVC	SANITARY	510.46	511.96 TP	
UC409	407+82.82	17.77' RT	EXISTING	4"	ELECTRIC	522.08	522.04 BP	10.78
			PROPOSED	24" PVC	SANITARY	509.22	511.26 TP	

LEGEND: TP = TOP OF PIPE, BP = BOTTOM OF PIPE, DIP = DUCTILE IRON PIPE, RCP = REINFORCED CONCRETE PIPE, PVC = POLYVINYL CHLORIDE, VCP = VITRIFIED CLAY PIPE

JOLIET STREET (NORTH) UTILITY CROSSING TABLE

CROSSING NUMBER	LOCATION		PIPE INFORMATION			INVERT ELEVATION	OUTER ELEVATION	CLEARANCE (FEET)
	STATION	OFFSET	STATUS	SIZE	TYPE			
UC701	700+61.00	21.58' LT	EXISTING	2" STL	GAS	521.03	520.99 BP	2.76
			PROPOSED	6" DIP	WATER	517.69	518.23 TP	
UC702	700+61.00	8.25' LT	PROPOSED	6" DIP	WATER	517.70	517.66 BP	1.73
			PROPOSED	8" PVC	SANITARY	515.22	515.93 TP	
UC703	701+26.10	8.18' LT	EXISTING	2" STL	GAS	520.26	520.22 BP	4.94
			PROPOSED	8" PVC	SANITARY	514.57	515.28 TP	
UC704	701+30.24	8.17' LT	EXISTING	12" RCP	STORM	521.10	520.93 BP	5.69
			PROPOSED	8" PVC	SANITARY	514.53	515.24 TP	
UC705	701+64.54	8.13' LT	EXISTING	8" DIP	WATER	517.58	517.54 BP	2.65
			PROPOSED	8" PVC	SANITARY	514.18	514.89 TP	
UC706	701+75.59	21.23' LT	EXISTING	2" STL	GAS	520.21	520.17 BP	8.09
			PROPOSED	24" PVC	SANITARY	510.04	512.08 TP	
UC707	701+81.82	4.53' LT	EXISTING	12" RCP	STORM	520.10	519.93 BP	7.60
			PROPOSED	24" PVC	SANITARY	510.29	512.33 TP	

LEGEND: TP = TOP OF PIPE, BP = BOTTOM OF PIPE, DIP = DUCTILE IRON PIPE, RCP = REINFORCED CONCRETE PIPE, PVC = POLYVINYL CHLORIDE, VCP = VITRIFIED CLAY PIPE

DES PLAINES STREET (SOUTH) UTILITY CROSSING TABLE

CROSSING NUMBER	LOCATION		PIPE INFORMATION			INVERT ELEVATION	OUTER ELEVATION	CLEARANCE (FEET)
	STATION	OFFSET	STATUS	SIZE	TYPE			
UC1301	1202+54.68	15.99' RT	EXISTING	2" STL	GAS	519.09	519.05 BP	3.08
			PROPOSED	8" DIP	WATER	515.26	515.97 TP	

LEGEND: TP = TOP OF PIPE, BP = BOTTOM OF PIPE, DIP = DUCTILE IRON PIPE, RCP = REINFORCED CONCRETE PIPE, PVC = POLYVINYL CHLORIDE, VCP = VITRIFIED CLAY PIPE

JOLIET STREET (SOUTH) UTILITY CROSSING TABLE

CROSSING NUMBER	LOCATION		PIPE INFORMATION			INVERT ELEVATION	OUTER ELEVATION	CLEARANCE (FEET)
	STATION	OFFSET	STATUS	SIZE	TYPE			
UC601	602+39.18	19.80' LT	EXISTING	2" STL	GAS	522.31	522.27 BP	2.75
			PROPOSED	8" DIP	WATER	518.81	519.52 TP	
UC602	602+39.20	10.17' LT	PROPOSED	8" DIP	WATER	518.62	518.58 BP	6.21
			EXISTING	48" RCP	SANITARY	507.95	512.37 TP	

LEGEND: TP = TOP OF PIPE, BP = BOTTOM OF PIPE, DIP = DUCTILE IRON PIPE, RCP = REINFORCED CONCRETE PIPE, PVC = POLYVINYL CHLORIDE, VCP = VITRIFIED CLAY PIPE

LEGEND: TP = TOP OF PIPE, BP = BOTTOM OF PIPE, DIP = DUCTILE IRON PIPE, RCP = REINFORCED CONCRETE PIPE, PVC = POLYVINYL CHLORIDE, VCP = VITRIFIED CLAY PIPE

WATER STREET UTILITY CROSSING TABLE

CROSSING NUMBER	LOCATION		PIPE INFORMATION			INVERT ELEVATION	OUTER ELEVATION	CLEARANCE (FEET)
	STATION	OFFSET	STATUS	SIZE	TYPE			
UC301	299+11.54	9.11' RT	EXISTING	12" RCP	STORM	520.48	520.31 BP	2.08
			PROPOSED	8" DIP	WATER	517.52	518.23 TP	
UC302	299+35.00	13.48' RT	EXISTING	2"	ELECTRIC	521.65	521.61 BP	3.03
			PROPOSED	6" DIP	WATER	518.04	518.58 TP	
UC303	299+92.36	6.00' RT	EXISTING	8" VCP	SANITARY	520.25	520.21 BP	0.77
			PROPOSED	8" DIP	WATER	518.73	519.44 TP	
UC304	301+38.01	16.59' RT	EXISTING	2"	ELECTRIC	524.71	524.67 BP	3.24
			PROPOSED	8" DIP	WATER	520.72	521.43 TP	
UC305	301+49.01	6.00' RT	PROPOSED	8" DIP	WATER	520.51	520.47 BP	9.18
			PROPOSED	12" PVC	SANITARY	510.25	511.29 TP	
UC306	301+49.01	16.62' RT	EXISTING	2"	ELECTRIC	524.71	524.67 BP	13.35
			PROPOSED	12" PVC	SANITARY	510.28	511.32 TP	
UC307	301+90.00	1.05' RT	PROPOSED	6" DIP	WATER	519.80	519.76 BP	8.67
			EXISTING	12" VCP	SANITARY	510.05	511.09 TP	
UC308	304+24.94	9.00' RT	PROPOSED	2"	ELECTRIC	519.79	519.75 BP	3.22
			PROPOSED	8" DIP	WATER	515.82	516.53 TP	
UC309	304+37.92	9.00' RT	EXISTING	12" RCP	STORM	519.76	519.59 BP	3.15
			PROPOSED	8" DIP	WATER	515.73	516.44 TP	
UC310	304+58.16	9.00' RT	EXISTING	2" STL	GAS	519.62	519.58 BP	3.29
			PROPOSED	8" DIP	WATER	515.58	516.29 TP	
UC311	304+65.00	6.39' LT	EXISTING	12" RCP	STORM	518.95	518.78 BP	2.54
			PROPOSED	6" DIP	WATER	515.70	516.24 TP	
UC312	304+65.00	2.95' RT	PROPOSED	6" DIP	WATER	515.70	515.66 BP	5.76
			EXISTING	12" VCP	SANITARY	508.86	509.90 TP	
UC313	306+10.67	9.00' RT	EXISTING	12" RCP	STORM	518.29	518.12 BP	2.83
			PROPOSED	8" DIP	WATER	514.58	515.29 TP	
UC314	306+12.14	3.01' RT	EXISTING	12" RCP	STORM	518.06	517.89 BP	10.70
			PROPOSED	12" PVC	SANITARY	506.15	507.19 TP	
UC315	306+98.57	9.00' RT	PROPOSED	15" RCP	STORM	516.10	515.91 BP	1.50
			PROPOSED	8" DIP	WATER	513.70	514.41 TP	
UC316	306+98.820	3.00' RT	PROPOSED	15" RCP	STORM	516.08	515.89 BP	10.39
			PROPOSED	12" PVC	SANITARY	504.46	505.50 TP	
UC317	307+38.74	19.50' RT	EXISTING	2" STL	GAS	517.49	517.45 BP	2.81
			PROPOSED	8" DIP	WATER	513.93	514.64 TP	
UC318	307+51.73	9.05' RT	PROPOSED	8" DIP	WATER	513.86	513.82 BP	4.48
			PROPOSED	24" PVC	SANITARY	507.30	509.34 TP	
UC319	307+51.73	13.11' RT	EXISTING	2" STL	GAS	517.44	517.40 BP	8.03
			PROPOSED	24" PVC	SANITARY	507.33	509.37 TP	
UC320	307+90.54	17.78' LT	PROPOSED	2"	ELECTRIC	517.55	517.10 BP	3.04
			PROPOSED	8" DIP	WATER	513.35	514.06 TP	
UC321	307+90.57	11.15' LT	PROPOSED	18" RCP	STORM	515.61	515.40 BP	1.28
			PROPOSED	8" DIP	WATER	513.41	514.12 TP	
UC322	307+90.60	4.13' LT	PROPOSED	8" DIP	WATER	513.51	513.47 BP	4.23
			PROPOSED	24" PVC	SANITARY	507.20	509.24 TP	
UC323	307+99.50	21.62' LT	PROPOSED	12" RCP	STORM	515.71	515.54 BP	7.99
			EXISTING	48" RCP	SANITARY	503.13	507.55 TP	
UC324	307+99.45	11.83' LT	PROPOSED	18" RCP	STORM	515.57	515.36 BP	7.80
			EXISTING	48" RCP	SANITARY	503.14	507.56 TP	
UC325	308+13.13	17.78' LT	PROPOSED	2"	ELECTRIC	517.63	517.59 BP	0.85
			PROPOSED	12" RCP	STORM	515.57	516.74 TP	
UC326	308+22.36	15.18' LT	PROPOSED	2"	ELECTRIC	517.37	517.33 BP	0.68
			PROPOSED	12" RCP	STORM	515.48	516.65 TP	
UC327	308+23.69	13.70' LT	PROPOSED	2"	ELECTRIC	517.37	517.33 BP	0.17
			PROPOSED	18" RCP	STORM	515.45	517.16 TP	

US 6 (RAILROAD STREET) UTILITY CROSSING TABLE

CROSSING NUMBER	LOCATION		PIPE INFORMATION			INVERT ELEVATION	OUTER ELEVATION	CLEARANCE (FEET)
	STATION	OFFSET	STATUS	SIZE	TYPE			
UC1201	233+21.42	12.50' RT	PROPOSED	42" RCP	STORM	537.68	537.31 BP	1.13
			PROPOSED	12" DIP	WATER	535.13	536.18 TP	
UC1202	233+49.39	12.50' RT	EXISTING	2" STL	THERMAL	539.86 (APPROX.)	539.82 BP (APPROX.)	3.61
			PROPOSED	12" DIP	WATER	535.16	536.21 TP	
UC1203	233+52.87	12.50' RT	PROPOSED	18" PVC	SANITARY	538.65	538.61 BP	2.39
			PROPOSED	12" DIP	WATER	535.17	536.22 TP	

LEGEND: TP = TOP OF PIPE, BP = BOTTOM OF PIPE, DIP = DUCTILE IRON PIPE, RCP = REINFORCED CONCRETE PIPE, PVC = POLYVINYL CHLORIDE, VCP = VITRIFIED CLAY PIPE

MCDONOUGH STREET UTILITY CROSSING TABLE

CROSSING NUMBER	LOCATION		PIPE INFORMATION			INVERT ELEVATION	OUTER ELEVATION	CLEARANCE (FEET)
	STATION	OFFSET	STATUS	SIZE	TYPE			
UC1302	1310+36.00	0.93' LT	PROPOSED	18" PVC	SANITARY	537.33	537.29 BP	0.94
			PROPOSED	12" DIP	WATER	536.00	536.35 TP	
UC1303	1310+36.00	6.08' RT	EXISTING	2" STL	THERMAL	539.22 (APPROX.)	539.18 BP (APPROX.)	2.83
			PROPOSED	12" DIP	WATER	536.00	536.35 TP	
UC1304	1310+59.93	15.50' RT	PROPOSED	2" STL	THERMAL	539.77 (APPROX.)	539.73 BP (APPROX.)	3.27
			PROPOSED	8" DIP	WATER	535.75	536.46 TP	
UC1305	1310+77.86	15.50' RT	PROPOSED	12" RCP	STORM	540.08	539.91 BP	3.76
			PROPOSED	8" DIP	WATER	535.44	536.15 TP	
UC1306	1312+01.88	15.50' RT	PROPOSED	12" RCP	STORM	538.87	538.70 BP	3.01
			PROPOSED	8" DIP	WATER	534.98	535.69 TP	
UC1307	1312+76.05	15.50' RT	PROPOSED	12" RCP	STORM	537.60	537.43 BP	1.56
			PROPOSED	8" DIP	WATER	535.16	535.87 TP	
UC1308	1312+76.74	15.50' RT	PROPOSED	8" VCP	STORM	536.95	536.91 BP	1.04
			PROPOSED	8" DIP	WATER	535.16	535.87 TP	

LEGEND: TP = TOP OF PIPE, BP = BOTTOM OF PIPE, DIP = DUCTILE IRON PIPE, RCP = REINFORCED CONCRETE PIPE, PVC = POLYVINYL CHLORIDE, VCP = VITRIFIED CLAY PIPE

STATION / OFFSET FOR DRAINAGE STRUCTURES

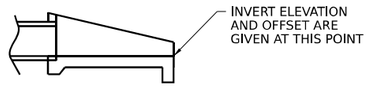

END SECTION

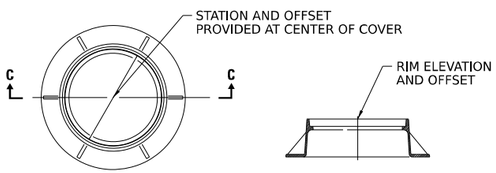

PLAN VIEW **SECTION C–C**

TYPE 1 LID

MANHOLE WITH CIRCULAR LIDS

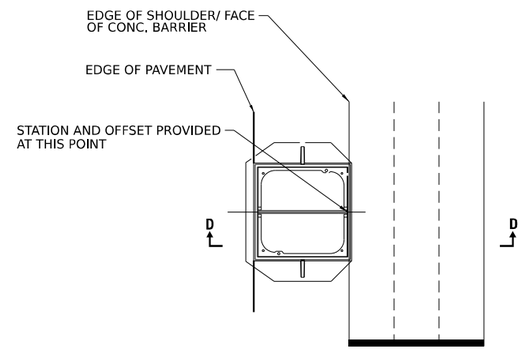

PLAN VIEW

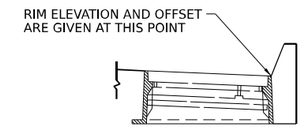

TYPE 11 FRAME & GRATE

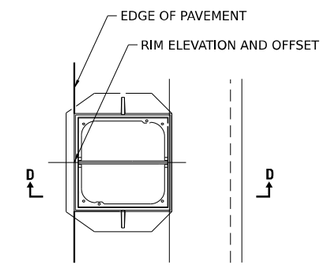

PLAN VIEW

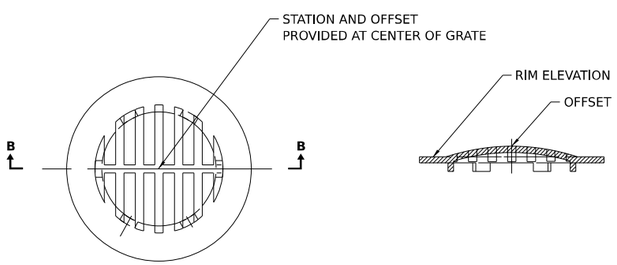

PLAN VIEW **SECTION B–B**

TYPE 8 GRATE

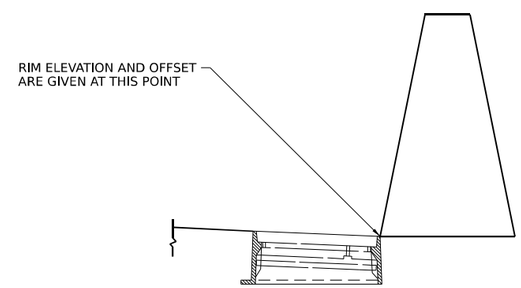

SECTION D–D

TYPE 20 / 22 FRAME & GRATE

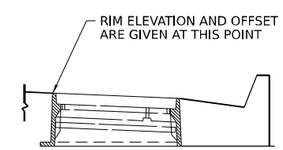

SECTION D–D

TYPE 24 FRAME & GRATE

MODEL: Default
FILE NAME: pw://transystems-pw.bentley.com:transyscorp-pw1-hosted/Documents/Projects_2018/CH401/401180022/03-WSP/CAD/62R23-RB-1/Sheets/CivilD162R23-sht-draindetail1.dgn

WSP USA Inc.
30 N. LASALLE STREET
SUITE 4200
CHICAGO, IL 60602
TEL: (312) 782-8150

USER NAME = USHC706648	DESIGNED - AKG	REVISED -	
	DRAWN - SSM	REVISED -	
PLOT SCALE = 100.000 ' / in.	CHECKED - KS	REVISED -	
PLOT DATE = 11/5/2025	DATE - 11/7/2025	REVISED -	

STATE OF ILLINOIS
DEPARTMENT OF TRANSPORTATION

I–80
DRAINAGE DETAILS

SCALE: NONE | SHEET 1 OF 4 SHEETS | STA. | TO STA.

F.A.I. RTE.	SECTION	COUNTY	TOTAL SHEETS	SHEET NO.
80	FAI 80 21 STRUCTURE 2	WILL	1230	383
		CONTRACT NO. 62R23		
	ILLINOIS	FED. AID PROJECT		

ROCK OUTLET PROTECTION

STRUCTURE ID	ALIGNMENT	STATION	OFFSET (FEET)		OUTLET SIZE (IN)	OUTLETTING TO	WIDTH US W1 (FEET)	WIDTH DS W2 (FEET)	LENGTH A (FEET)	LENGTH B (FEET)	LENGTH C (FEET)	TOTAL LENGTH La (FEET)	RIPRAP AREA - CLASS A4 (SQ YD)	FILTER FABRIC (SQ YD)
2172	US-6	217+25	54.2	RT	30	DITCH	7.5	15.6	0.6	8.0	3.5	12.1	15	15
2175	US-6	217+75	43.9	RT	38	DITCH	9.5	18.0	0.6	8.0	4.2	12.7	19	19
5085	RAMP A	508+49	122.2	RT	15	DITCH	36.0	36.0	2.6	10.0	2.6	15.2	61	61
1330	RAMP C	113+37	83.8	LT	15	DITCH	3.8	9.9	0.6	6.0	2.6	9.2	7	7

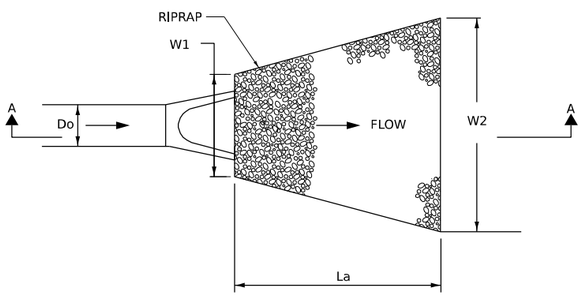

DETAIL A

RIPRAP OUTLET PROTECTION TO FLAT AREA OR PERPENDICULAR TO DITCH

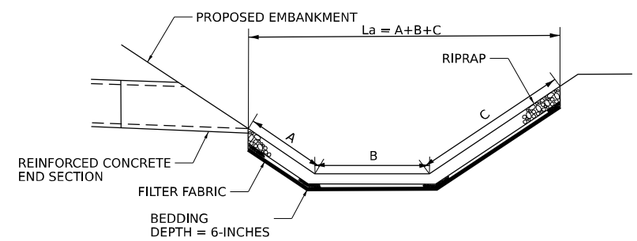

SECTION A–A – DITCH SECTION

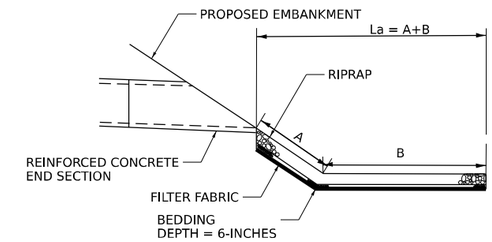

SECTION A–A GROUND

CONCRETE COLLAR DETAIL

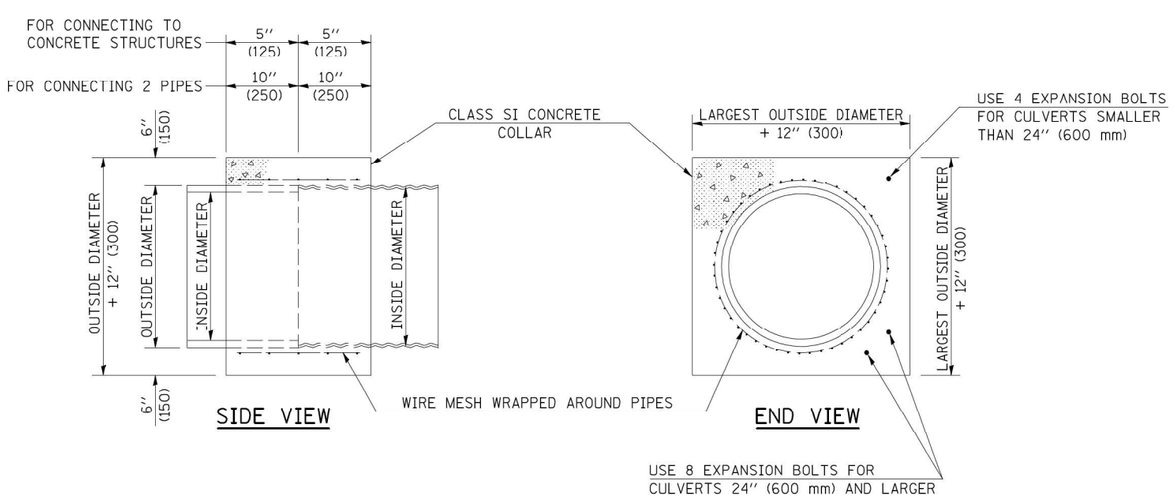

QUANTITIES FOR CONCRETE PIPES	
INSIDE DIAMETER OF PIPE INCH (mm)	ESTIMATED CLASS SI CONCRETE REQUIRED 20″ (500 mm) WIDTH CU. YD. (m^3)
4″ (100)	0.14 (0.11)
6″ (150)	0.16 (0.12)
8″ (200)	0.19 (0.14)
10″ (250)	0.22 (0.17)
12″ (300)	0.25 (0.19)
15″ (375)	0.30 (0.23)
18″ (450)	0.35 (0.27)
24″ (600)	0.45 (0.35)
30″ (750)	0.57 (0.43)
36″ (900)	0.69 (0.53)
42″ (1050)	0.83 (0.63)
48″ (1200)	0.97 (0.74)
54″ (1350)	1.12 (0.86)
60″ (1500)	1.28 (0.98)

QUANTITIES FOR METAL PIPES	
INSIDE DIAMETER OF PIPE INCH (mm)	ESTIMATED CLASS SI CONCRETE REQUIRED 20″ (500 mm) WIDTH CU. YD. (m^3)
4″ (100)	0.12 (0.09)
6″ (150)	0.14 (0.11)
8″ (200)	0.16 (0.12)
10″ (250)	0.19 (0.14)
12″ (300)	0.21 (0.16)
15″ (375)	0.25 (0.19)
18″ (450)	0.29 (0.22)
24″ (600)	0.38 (0.29)
30″ (750)	0.47 (0.36)
36″ (900)	0.59 (0.45)
42″ (1050)	0.69 (0.53)
48″ (1200)	0.81 (0.62)
54″ (1350)	0.93 (0.71)
60″ (1500)	1.05 (0.81)

GENERAL NOTES

1. CLASS SI CONCRETE SHALL BE USED THROUGHOUT.
2. WHEN CONCRETE COLLARS ARE USED TO CONNECT PIPES OF DIFFERENT OUTSIDE DIAMETERS, THE CONCRETE COLLAR SHALL BE FORMED USING THE LARGEST OUTSIDE DIAMETER (SEE END VIEW).
3. THE WIRE MESH SHALL WEIGH NOT LESS THAN 54#/100 SQ. FT. (2.63 kg/m^2).
4. WHEN CONCRETE COLLARS ARE CONSTRUCTED ADJACENT TO AN EXISTING CONCRETE STRUCTURE (HEADWALLS, ETC.) EXPANSION BOLTS, SHALL BE USED AND WILL BE PAID FOR AT THE CONTRACT UNIT PRICE, EACH, FOR EXPANSION BOLTS OF THE SIZE SPECIFIED IN THE PLANS.
5. CONCRETE COLLARS WILL BE PAID FOR AT THE CONTRACT UNIT PRICE, PER CUBIC YARD (CUBIC METER), FOR CONCRETE COLLARS INCLUDING ALL MATERIAL AND LABOR SPECIFIED TO COMPLETE THE WORK IN PLACE.
6. ALL DIMENSIONS ARE IN INCHES (MILLIMETERS) UNLESS OTHERWISE SHOWN.

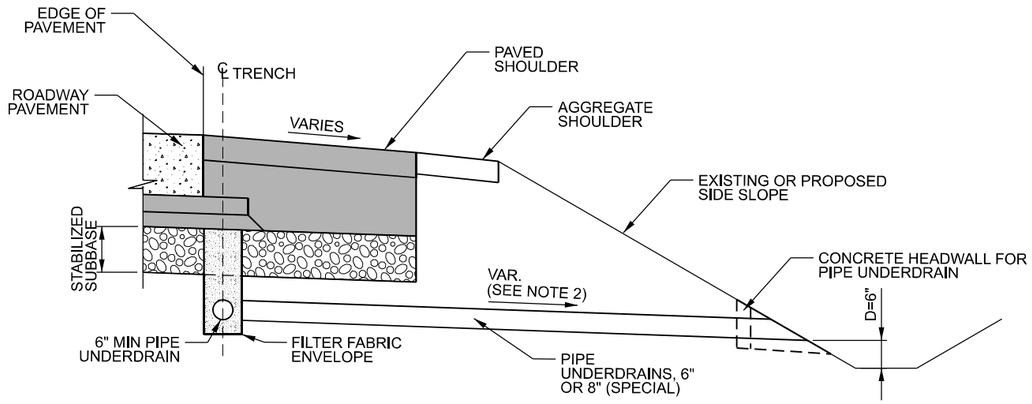

UNDERDRAIN OUTLET DETAILS

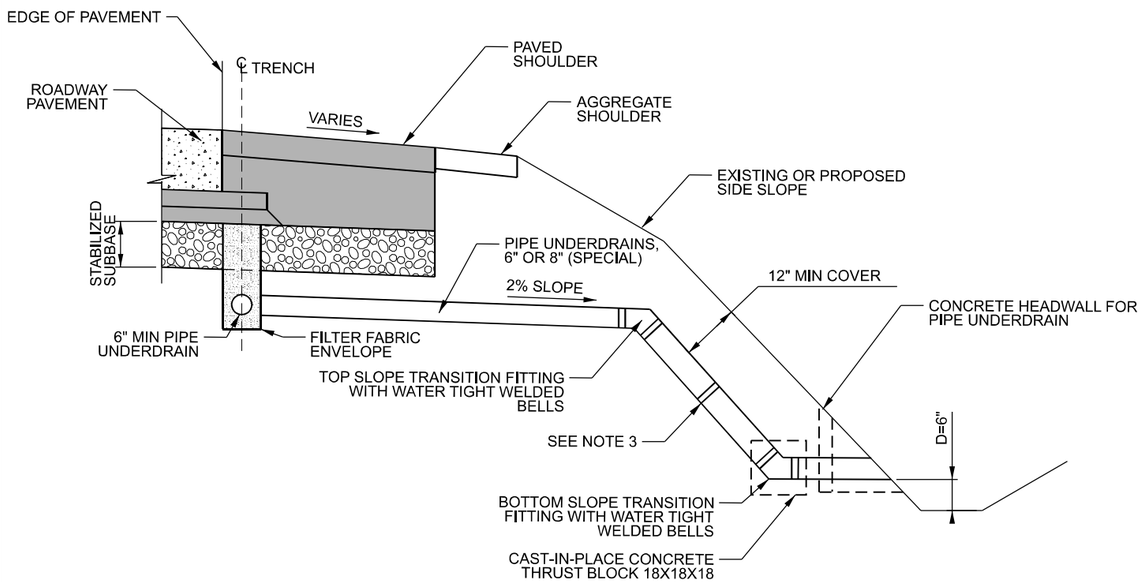

PIPE UNDERDRAIN OUTLET ON HIGH FILL SLOPE

LONGITUDINAL UNDERDRAINS

PIPE UNDERDRAINS, TYPE 2, 6"									
FROM				TO					
ALIGNMENT	STATION	OFFSET		ALIGNMENT	STATION	OFFSET		LENGTH (FT)	COMMENTS
Ramp A	506+00	12.5	RT	Ramp A	507+00	12.5	RT	100	
Ramp A	507+02	12.5	RT	Ramp A	508+16	12.8	RT	114	
Ramp C	117+39	0.1	RT	Ramp C	116+50	0.4	RT	89	
Ramp C	116+48	0.4	RT	Ramp C	115+50	0.4	RT	98	
Ramp C	115+48	0.5	RT	Ramp C	114+50	0.4	RT	98	
Ramp C	114+47	0.5	RT	Ramp C	113+50	0.5	RT	97	

PIPE UNDERDRAINS, 6" SPECIAL

ALIGNMENT	FROM STATION	OFFSET		TO STATION	OFFSET		OUTLETS TO STR.	INVERT	LENGTH (FT)	COMMENTS
Ramp A	507+00	12.5	RT	507+00	18.0	RT	DS6070	560.71	6	
Ramp A	508+18	12.8	RT	508+13	20.1	RT	IDS6081	557.16	8	CONNECT TO TEMPORARY DRAINAGE STRUCTURE
Ramp C	116+50	0.3	RT	116+50	6.8	RT	DS1651	556.27	7	
Ramp C	115+50	0.5	RT	115+50	9.0	RT	DS1550	553.77	9	
Ramp C	114+50	0.5	RT	114+50	9.0	RT	DS1450	552.50	9	
Ramp C	113+50	0.5	RT	113+50	9.0	RT	DS1350	551.32	9	

NOTES:

1. MODIFY IDOT HIGHWAY STANDARD 601001 AS SHOWN HEREON
2. SLOPE OUTLET PIPE AS NEEDED TO MEET REQUIRED DEPTH, D. 6" MAX. IF REQUIRED SLOPE EXCEEDS 6%, PIPE UNDERDRAIN OUTLET ON HIGH FILL SLOPE DETAIL SHALL BE APPLIED.
3. ALL JOINTS IN SLOPE DRAIN SYSTEM SHALL BE WATERTIGHT WITH A WELDED INTERNAL CYLINDER ON THE SPIGOT END OF THE PIPE. FIELD JOINTS SHALL BE WRAPPED WITH A DOUBLE WIDE MARMAC COUPLER, OR EQUIVALENT. PROVIDE CAST-IN-PLACE CONCRETE THRUST BLOCK AT BOTTOM SLOPE TRANSITION AS SHOWN. WORK AND MATERIALS SHALL BE INCLUDED IN PRICE OF PIPE UNDERDRAINS (SPECIAL) OF THE SIZE NOTED.
4. ENGINEER TO CONSIDER NEED FOR OUTLET EROSION PROTECTION BASED ON LOCAL CONDITIONS.
5. PIPE UNDERDRAINS SHALL BE INSTALLED ACCORDING TO SECTION 601 OF THE SSRBC AND STANDARD 601001-05. TOP OF PIPE UNDERDRAINS SHALL BE PLACED MINIMUM 6" BELOW THE AGGREGATE SUBGRADE IMPROVEMENT LAYER. THE COST OF MAKING PIPE UNDERDRAIN CONNECTIONS TO THE DRAINAGE STRUCTURES SHALL BE INCLUDED IN THE COST OF PIPE UNDERDRAINS.

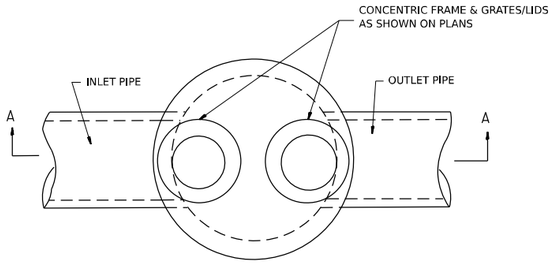

PLAN

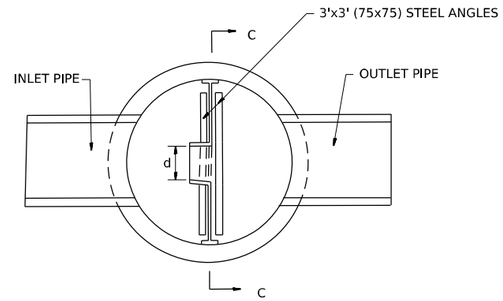

SECTION B-B

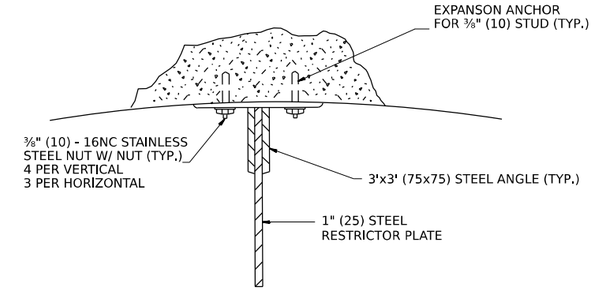

ANGLE FASTENER DETAIL

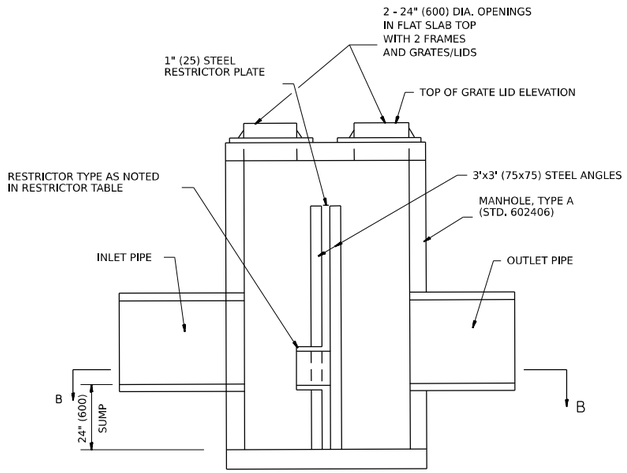

SECTION A-A

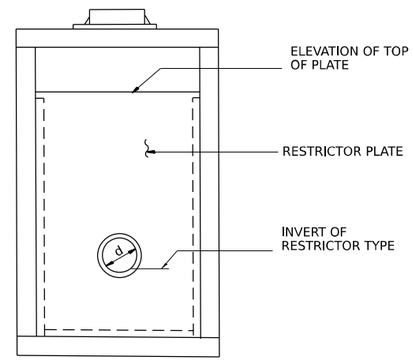

SECTION C-C

NOTES:

1. ALL STEEL ANGLES AND PLATES TO BE GALVANIZED AFTER FABRICATION.
2. ALL RESTRICTOR PLATES, ANGLES AND HARDWARE TO BE INCLUDED IN THE COST OF THE MANHOLE.
3. BASIS OF PAYMENT: "MANHOLES ,TYPE A, 7'-DIAMETER, WITH 2 TYPE 1 FRAMES, CLOSED LID, RESTRICTOR PLATE" EACH

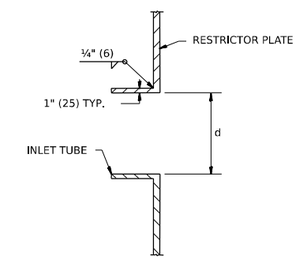

INLET TUBE DETAIL

STR. NO.	ALIGNMENT	STATION	OFFSET	MANHOLE DIAMETER	FRAME AND GRATE	RESTRICTOR TYPE	INSIDE RESTRICTOR TYPE DIAMETER in. (mm) (d)	INVERT OF RESTRICTOR TYPE	ELEVATION OF TOP OF PLATE OVERFLOW
IDS-5087	RAMP A	508+93	124.0' RT	6 FT	2-T1 F&G CL	2	4.0	520.00	523.00

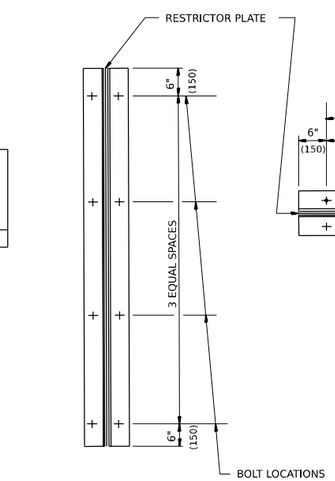

TYPICAL VERTICAL ANGLES
LOOKING TOWARD MANHOLE WALL

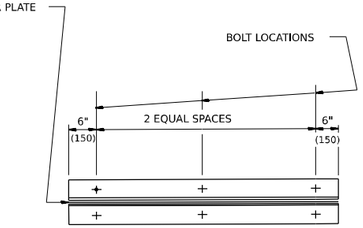

TYPICAL HORIZONTIAL
ANGLES LOOKING TOWARD
BOTTOM OF MANHOLE

TOTAL BOLTS REQUIRED: 22

NOTE:

1. ANGLES SHOULD BE 3x3x⅜ (75x75x75)
2. VERTICAL ANGLES SHOULD EXTEND FROM THE BOTTOM OF THE RESTRICTOR PLATE TO THE TOP.
3. HORIZONTAL ANGLES SHOULD EXTEND FROM VERTICAL ANGLE TO VERTICAL ANGLE.

STEEL ANGLE BOLTING DETAILS

RESTRICTOR TYPE					
1	2	3	4	5	6
RE-ENTRANT TUBE	SHARP EDGED	SQUARE EDGED	RE-ENTRANT TUBE	SQUARE EDGED	ROUNDED
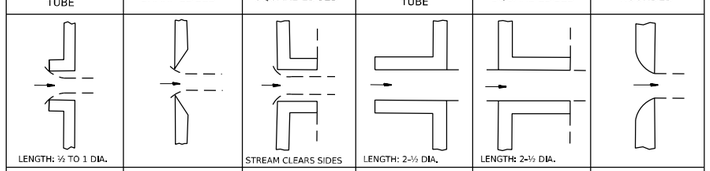					
LENGTH: ½ TO 1 DIA.		STREAM CLEARS SIDES	LENGTH: 2-½ DIA.	LENGTH: 2-½ DIA.	
C=.52	C=.61	C=.61	C=.73	C=.82	C=.98

VALUES OF "C" FOR CIRCULAR
AND SQUARE ORIFICES

ALL DIMENSIONS ARE IN INCHES (MILLIMETERS) UNLESS OTHERWISE SHOWN.

MODEL: Default
FILE NAME: pw://transystems-pw.bentley.com:transyscorp-pw1-hosted/Documents/Projects_2018/C-4401/401180022/03-WSP/CAD/62R23-RB-1/Sheets/Civil/D162R23-sht-draindetail4.dgn

WSP USA Inc.
30 N. LASALLE STREET
SUITE 4200
CHICAGO, IL 60602
TEL: (312) 782-8150

USER NAME = USHC706648	DESIGNED - SP	REVISED -	
	DRAWN - AD	REVISED -	
PLOT SCALE = 0.167 ' / in.	CHECKED - KS	REVISED -	
PLOT DATE = 11/5/2025	DATE - 11/7/2025	REVISED -	

STATE OF ILLINOIS
DEPARTMENT OF TRANSPORTATION

I-80
DRAINAGE DETAILS

SCALE: NONE | SHEET 4 OF 4 SHEETS | STA. | TO STA.

F.A.I. RTE.	SECTION	COUNTY	TOTAL SHEETS	SHEET NO.
80	FAI 80 21 STRUCTURE 2	WILL	1230	386
		CONTRACT NO. 62R23		
	ILLINOIS	FED. AID PROJECT		

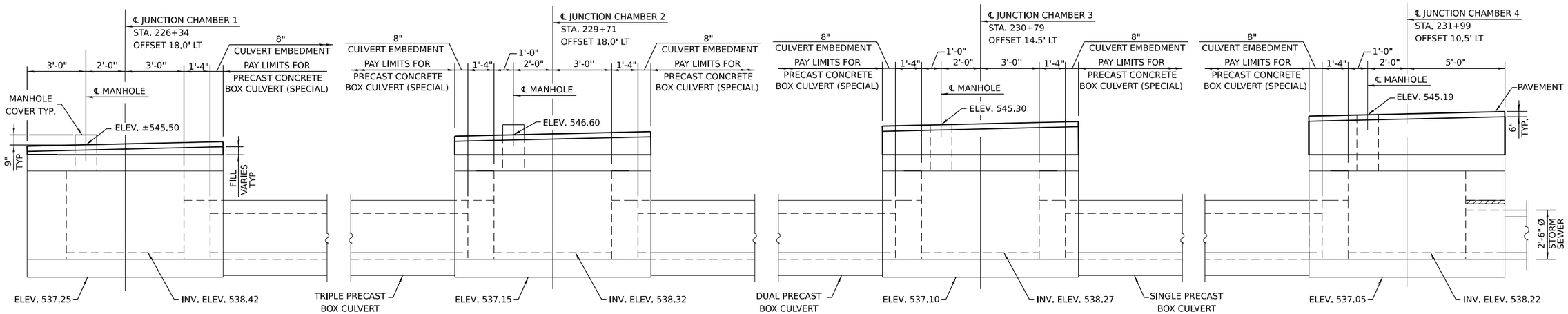

PRECAST CONCRETE BOX CULVERT (SPECIAL) ELEVATION

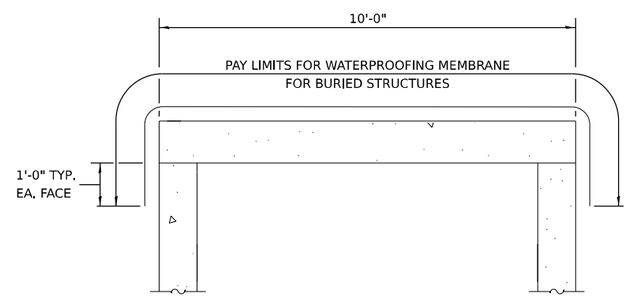

SECTION THRU JUNCTION CHAMBER

BILL OF MATERIAL

ITEM	UNIT	QUANTITY
PRECAST CONCRETE BOX CULVERT (SPECIAL)	FOOT	535
MEMBRANE WATERPROOFING SYSTEM FOR BURIED STRUCTURES	SQ YD	124
STRUCTURE EXCAVATION	CU YD	2333
ROCK EXCAVATION FOR STRUCTURES	CU YD	1247
JUNCTION CHAMBER NO. 1	EACH	1
JUNCTION CHAMBER NO. 2	EACH	1
JUNCTION CHAMBER NO. 3	EACH	1
JUNCTION CHAMBER NO. 4	EACH	1

WSP USA Inc.
30 N. LASALLE STREET
SUITE 4200
CHICAGO, IL 60602
TEL: (312) 782-8150

USER NAME = USSJ696614	DESIGNED - TB/MHD	REVISED -	
	DRAWN - TB/MHD	REVISED -	
PLOT SCALE = 5:4.0000 ':" / in.	CHECKED - LAS	REVISED -	
PLOT DATE = 11/6/2025	DATE - 11/7/2025	REVISED -	

STATE OF ILLINOIS
DEPARTMENT OF TRANSPORTATION

DRAINAGE DETAILS – US 6 COMPENSATORY STORAGE STRUCTURE
PRECAST REINFORCED CONCRETE BOX CULVERT

SCALE: NONE | SHEET 1 OF 11 SHEETS | STA. TO STA.

F.A.I. RTE.	SECTION	COUNTY	TOTAL SHEETS	SHEET NO.
80	FAI 80 21 STRUCTURE 2	WILL	1230	387

CONTRACT NO. 62R23

ILLINOIS | FED. AID PROJECT

MODEL: Default
FILE NAME: pw://transystems-pw.bentley.com:transyscorp-pw1-hosted/Documents/Projects_2018/CH401/401180022/03-WSP/CAD/62R23-RB-1/Sheets/CulvID162R23-sht-draindetail-US6-rcbc1.dgn

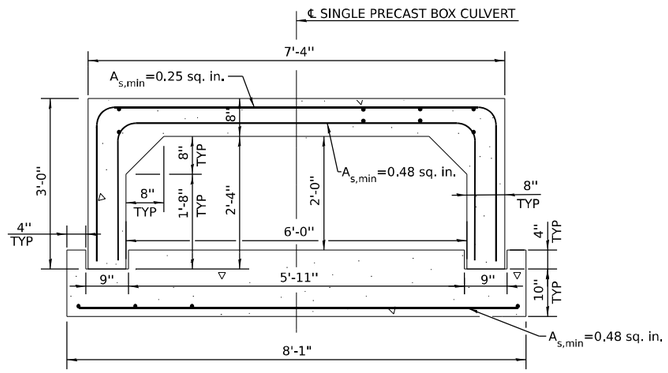

SECTION THRU SINGLE PRECAST BOX CULVERT

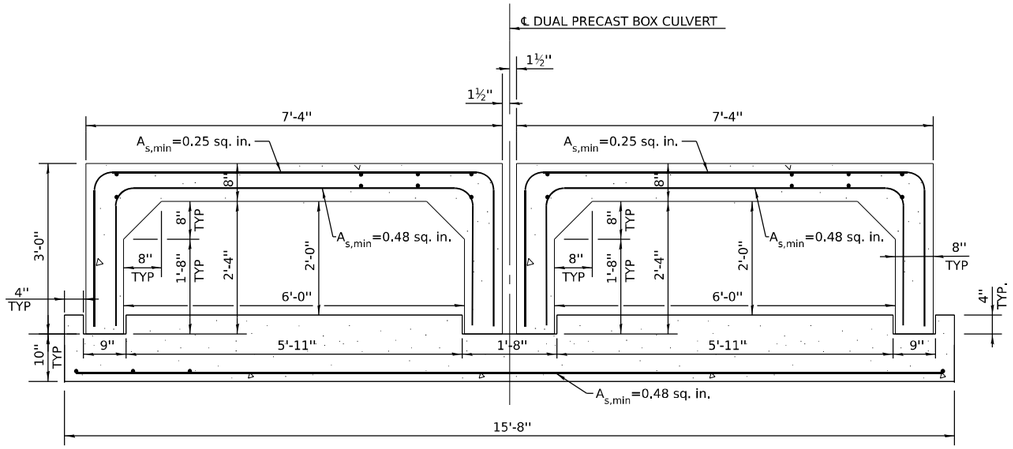

SECTION THRU DUAL PRECAST BOX CULVERT

PRECAST GENERAL NOTES

PRECAST CONCRETE BOX CULVERT (SPECIAL) SHALL CONFORM TO THE REQUIREMENTS OF ARTICLE 540.06 OF THE STANDARD SPECIFICATIONS, THE APPLICABLE REQUIREMENTS OF AASHTO M259 AND ASTM C1577.

THE MINIMUM PRECAST CONCRETE STRENGTH SHALL BE 5,000 PSI.

LIFTING HOLES SHALL BE FILLED WITH CONCRETE PLUGS AND MASTIC AFTER THE BOX SECTIONS ARE IN PLACE.

THE DESIGN FILL HEIGHT IS 5.0 FEET.

COVER FROM THE FACE OF PRECAST CONCRETE REINFORCEMENT BARS SHALL BE 1".

THE REINFORCEMENT BAR AREAS SHOWN ON THIS PLAN SHEET ARE BASED ON WELDED WIRE REINFORCEMENT (WWR). THE CONTRACTOR MAY USE STEEL REINFORCEMENT BARS IN LIEU OF WWR. REINFORCEMENT BARS SHALL BE LIMITED TO THE SIZES OF #3 AND #4 BARS, AND HAVE A MAXIMUM SPACING OF 4". THE REINFORCEMENT AREAS SHOWN ON THIS PLAN SHEET SHALL BE INCREASED TO ACCOUNT FOR THE DIFFERENCE IN STEEL YIELD STRENGTH IN ACCORDANCE WITH ASTM C1577, SECTION 12.6.

CAST-IN-PLACE BARREL AND/OR BASE SECTION IS NOT ALLOWED.

JOINT TO BE SEALED AND ALL VOIDS FILLED WITH A MASTIC JOINT SEALER PER ARTICLE 540.06.

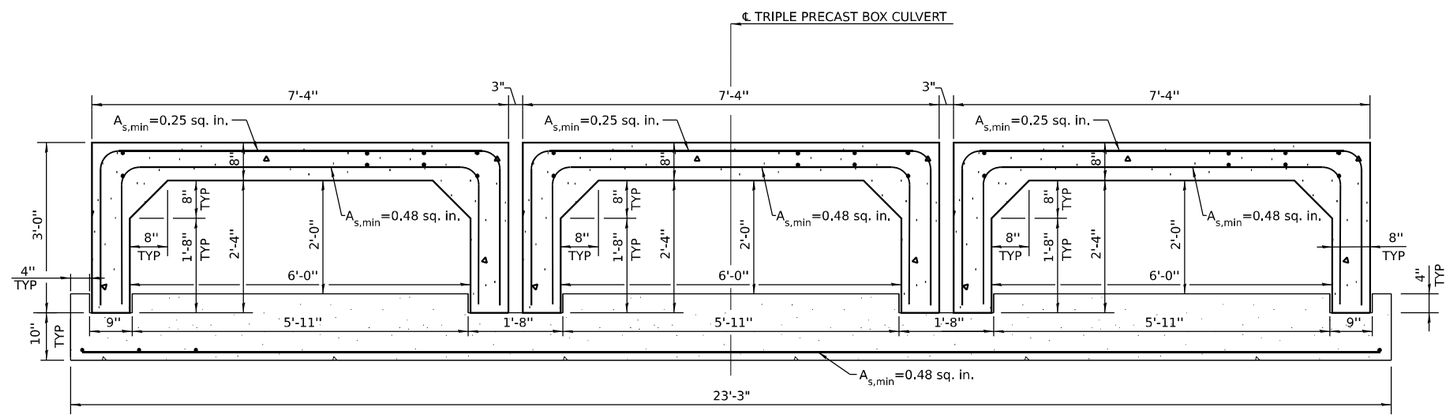

SECTION THRU TRIPLE PRECAST BOX CULVERT

PRECAST GENERAL NOTES

PRECAST CONCRETE BOX CULVERT (SPECIAL) SHALL CONFORM TO THE REQUIREMENTS OF ARTICLE 540.06 OF THE STANDARD SPECIFICATIONS, THE APPLICABLE REQUIREMENTS OF AASHTO M259 AND ASTM C1577.

THE MINIMUM PRECAST CONCRETE STRENGTH SHALL BE 5,000 PSI.

LIFTING HOLES SHALL BE FILLED WITH CONCRETE PLUGS AND MASTIC AFTER THE BOX SECTIONS ARE IN PLACE.

THE DESIGN FILL HEIGHT IS 5.0 FEET.

COVER FROM THE FACE OF PRECAST CONCRETE REINFORCEMENT BARS SHALL BE 1".

THE REINFORCEMENT BAR AREAS SHOWN ON THIS PLAN SHEET ARE BASED ON WELDED WIRE REINFORCEMENT (WWR). THE CONTRACTOR MAY USE STEEL REINFORCEMENT BARS IN LIEU OF WWR. REINFORCEMENT BARS SHALL BE LIMITED TO THE SIZES OF #3 AND #4 BARS, AND HAVE A MAXIMUM SPACING OF 4". THE REINFORCEMENT AREAS SHOWN ON THIS PLAN SHEET SHALL BE INCREASED TO ACCOUNT FOR THE DIFFERENCE IN STEEL YIELD STRENGTH IN ACCORDANCE WITH ASTM C1577, SECTION 12.6.

CAST-IN-PLACE BARREL AND/OR BASE SECTION IS NOT ALLOWED.

JOINTS TO BE SEALED AND ALL VOIDS FILLED WITH A MASTIC JOINT SEALER PER ARTICLE 540.06.

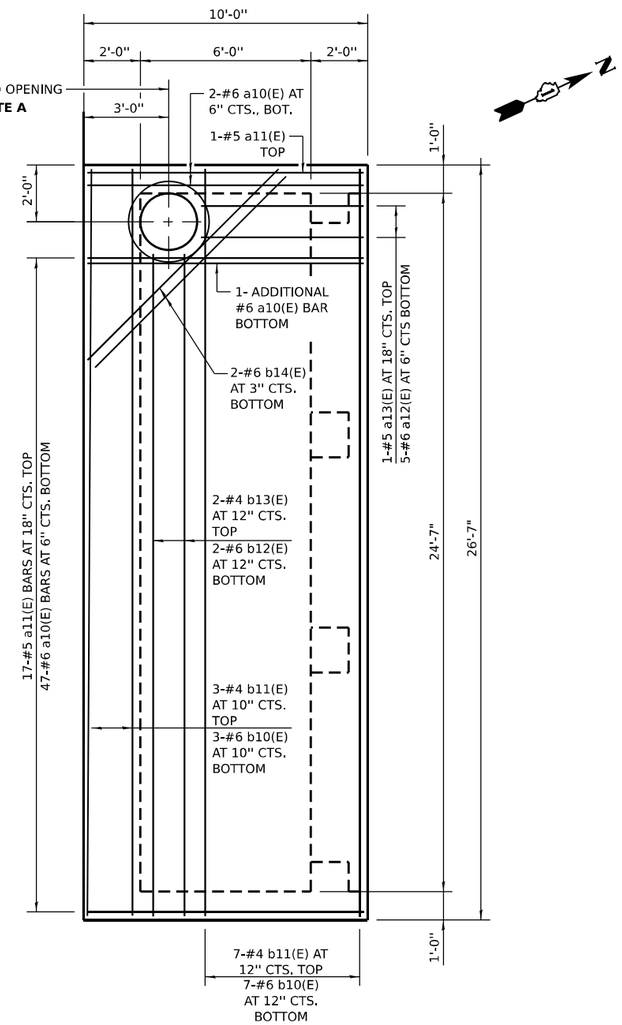

TOP SLAB PLAN

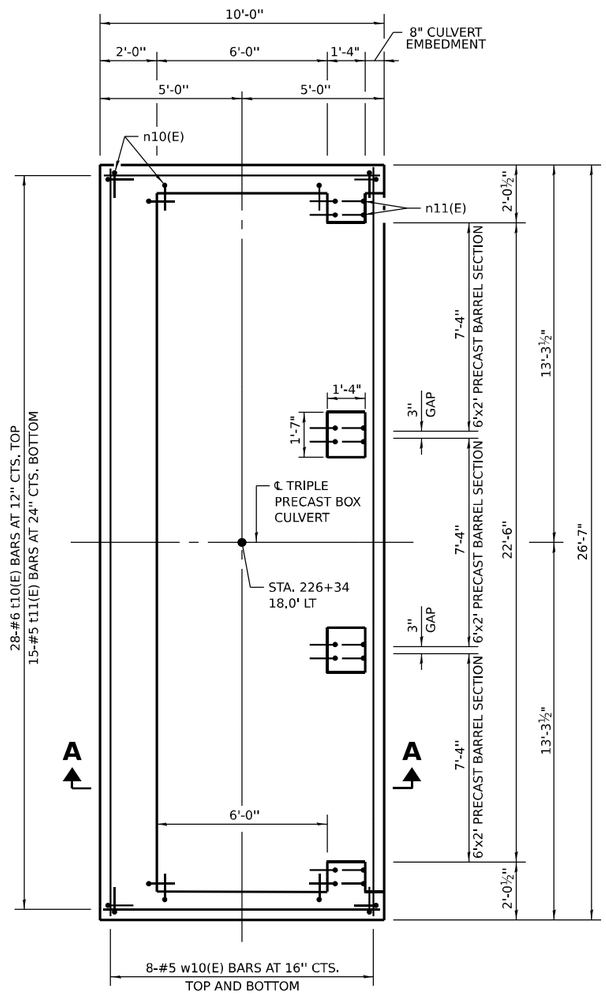

BOTTOM SLAB PLAN

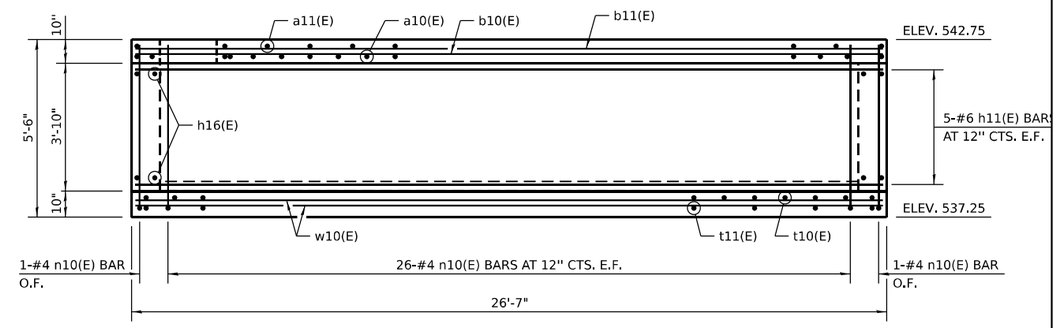

SOUTH WALL ELEVATION

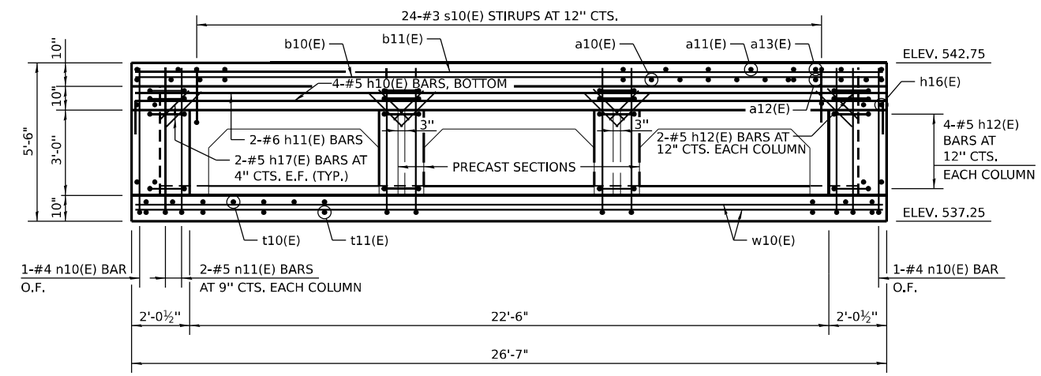

NORTH WALL ELEVATION

NOTE A

PROVIDE A 2'-11" ∅ 1" DEEP RECESS IN THE TOP SLAB, CENTERED OVER THE 2'-0" OPENING, FOR THE FRAME AND LID. FRAME SHALL BE SET ON AN INITIAL ⅜" MIN. GROUT BED (2:1 SAND AND PORTLAND CEMENT, VERY DRY MIX) TO MATCH RIM ELEVATION SHOWN ON DRAINAGE PLANS.

LEGEND

E.F.	EACH FACE
I.F.	INSIDE FACE
O.F.	OUTSIDE FACE

NOTES

REINFORCEMENT BARS DESIGNATED (E) SHALL BE EPOXY COATED.

SEE SHEET 391 FOR SECTION A-A, ADDITIONAL ELEVATIONS AND DETAILS.

SEE SHEET 389 FOR TRIPLE PRECAST BOX CULVERT DETAILS.

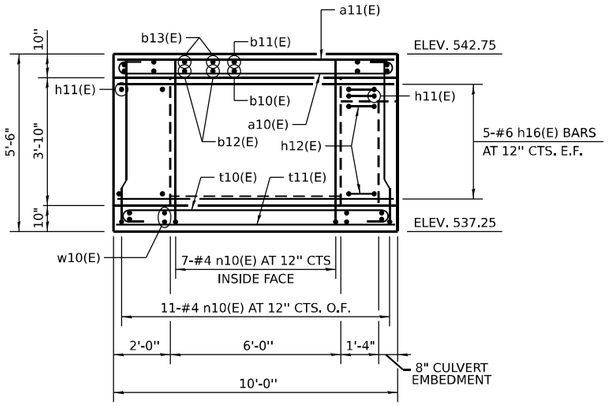

EAST WALL ELEVATION

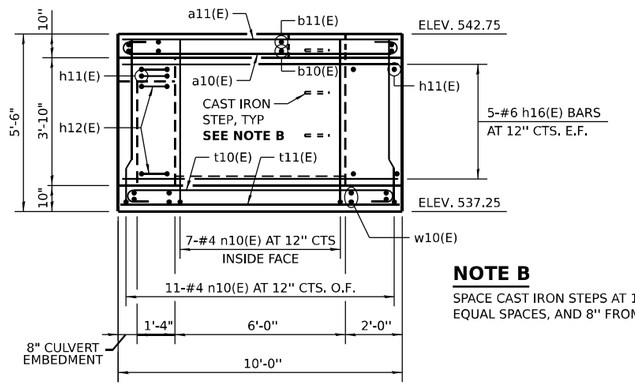

WEST WALL ELEVATION

NOTE B

SPACE CAST IRON STEPS AT 12" TO 18", EQUAL SPACES, AND 8" FROM TOP OF SLAB.

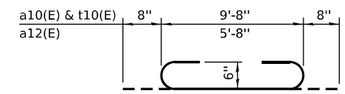

BARS a10(E), a12(E) & t10(E)

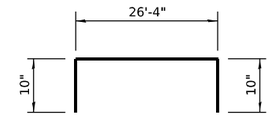

BAR h10(E)

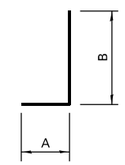

BAR	A	B
n10(E)	8"	5'-2"
n11(E)	10"	5'-2"

BARS n10(E) & n11(E)

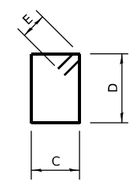

BAR	C	D	E
h12(E)	1'-0"	1'-3"	5½"
s10(E)	1'-8"	1'-4"	4½"

BARS h12(E) & s10(E)

BILL OF MATERIAL

(FOR INFORMATION ONLY)

BAR	NO.	SIZE	LENGTH	SHAPE
a10(E)	50	#6	11'-0"	
a11(E)	18	#5	9'-8"	
a12(E)	5	#6	7'-0"	
a13(E)	1	#5	5'-8"	
b10(E)	10	#6	26'-3"	
b11(E)	10	#4	26'-3"	
b12(E)	2	#6	23-3"	
b13(E)	2	#4	23'-3"	
b14(E)	2	#6	9'-6"	
h10(E)	4	#5	28'-0"	
h11(E)	12	#6	26'-3"	
h12(E)	24	#5	5'-5"	
h16(E)	20	#6	9'-8"	
h17(E)	24	#5	2'-0"	
n10(E)	92	#4	5'-10"	
n11(E)	16	#5	6'-0"	
s10(E)	24	#3	6'-9"	
t10(E)	28	#6	11'-0"	
t11(E)	15	#5	9'-8"	
w10(E)	16	#5	26'-3"	
* REINFORCEMENT BARS, EPOXY COATED			POUND	4400
* CONCRETE STRUCTURES			CU YD	28.5
* FRAMES AND LIDS, TYPE 1, OPEN LID			EACH	1
* CAST IRON STEPS			EACH	3

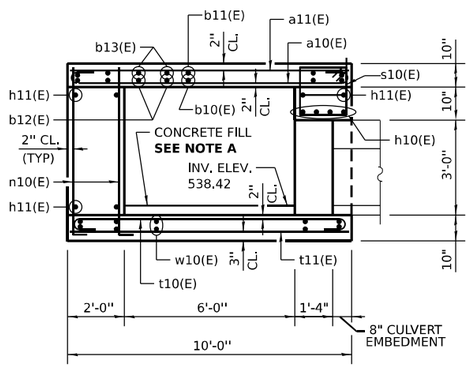

SECTION A-A

NOTE A

PLACE CONCRETE FILL AFTER INSTALLATION OF BOX CULVERT AND JUNCTION CHAMBER WALLS. MATCH TOP OF FILL ELEVATION TO BOX CULVERT INVERT ELEVATION 539.01.

NOTES

REINFORCEMENT BARS DESIGNATED (E) SHALL BE EPOXY COATED.

SEE SHEET 389 FOR TRIPLE PRECAST BOX CULVERT DETAILS.

SEE STANDARD 602701 FOR DETAILS OF CAST IRON STEPS.

SEE STANDARD 604001 FOR DETAILS OF FRAME AND LID.

THE JUNCTION CHAMBER AT STATION 226+34 WILL BE PAID FOR AS JUNCTION CHAMBER NO. 1.

* INCLUDED IN THE COST OF JUNCTION CHAMBER NO. 1.

LEGEND

E.F.	EACH FACE
I.F.	INSIDE FACE
O.F.	OUTSIDE FACE

WSP USA Inc.
30 N. LASALLE STREET
SUITE 4200
CHICAGO, IL 60602
TEL: (312) 782-8150

USER NAME = USSJ696614	DESIGNED - TB/MHD	REVISED -	
	DRAWN - TB/MHD	REVISED -	
PLOT SCALE = 5:4.0000 ':" / in.	CHECKED - LAS	REVISED -	
PLOT DATE = 11/6/2025	DATE - 11/7/2025	REVISED -	

STATE OF ILLINOIS
DEPARTMENT OF TRANSPORTATION

DRAINAGE DETAILS – US 6 COMPENSATORY STORAGE STRUCTURE
JUNCTION CHAMBER 1 – STA. 226+34 (2 OF 2)

SCALE: NONE | SHEET 5 OF 11 SHEETS | STA. 226+34 TO STA. 226+34

F.A.I. RTE.	SECTION	COUNTY	TOTAL SHEETS	SHEET NO.
80	FAI 80 21 STRUCTURE 2	WILL	1230	391

CONTRACT NO. 62R23

ILLINOIS | FED. AID PROJECT

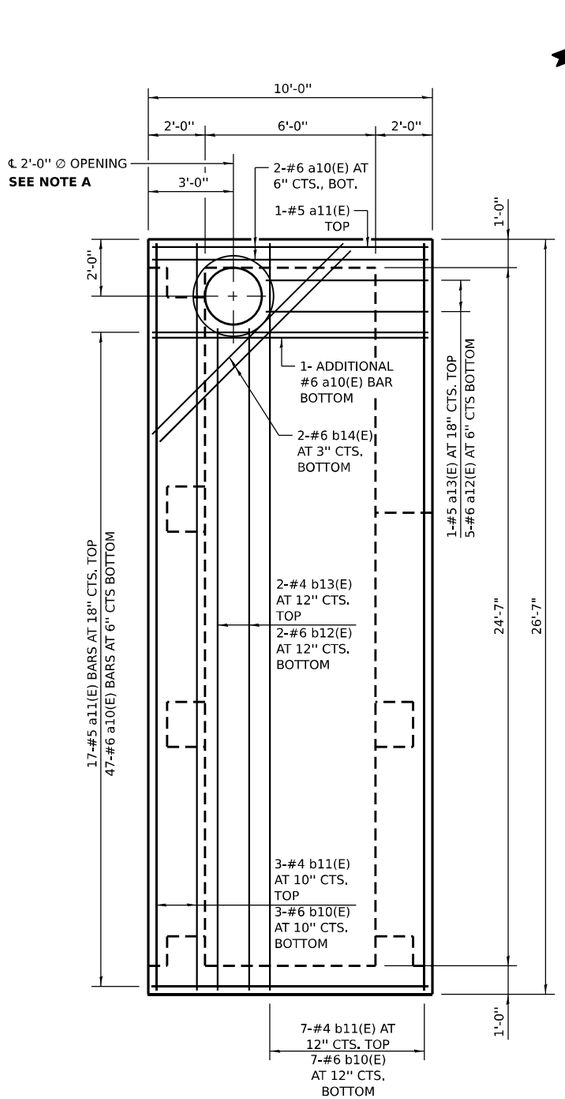

TOP SLAB PLAN

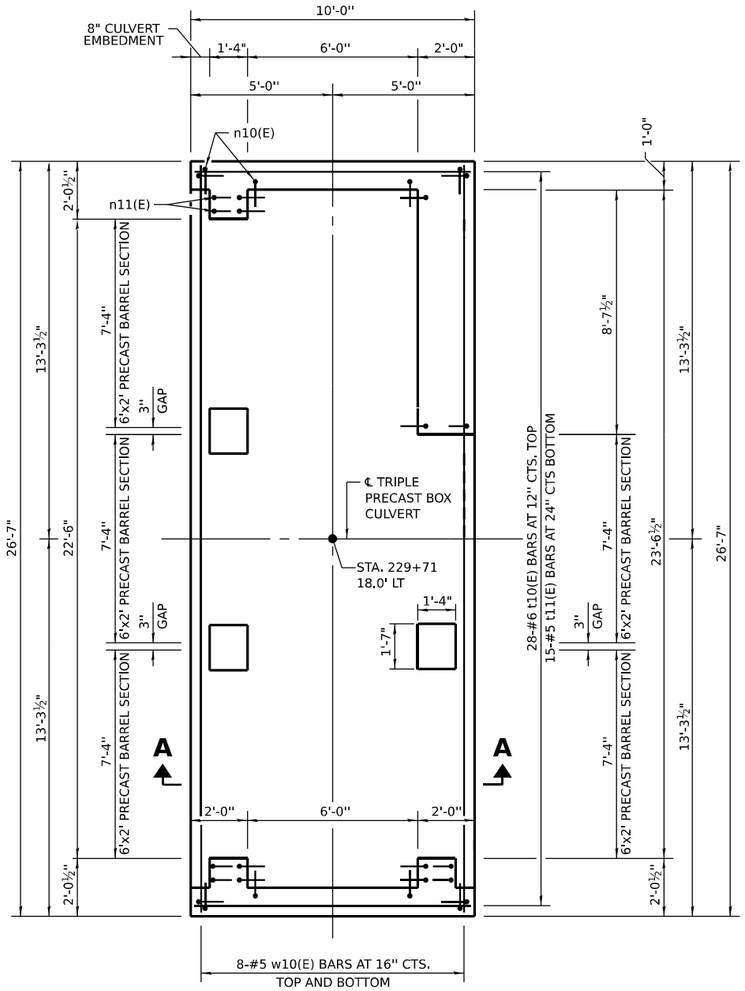

BOTTOM SLAB PLAN

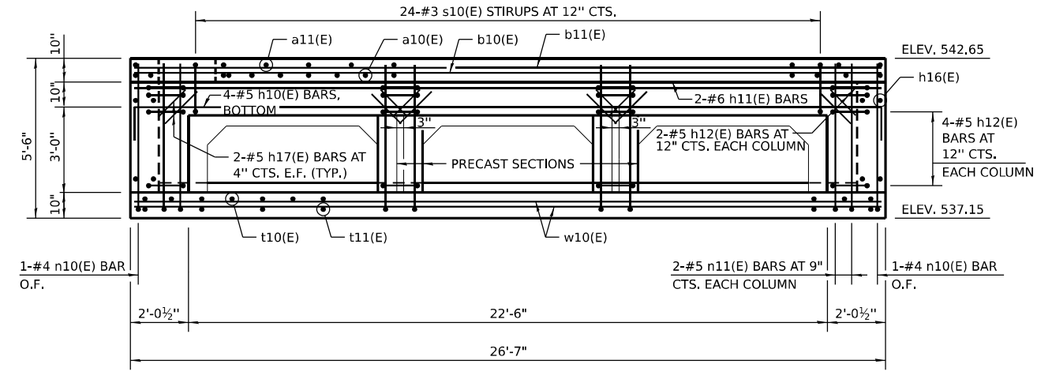

SOUTH WALL ELEVATION

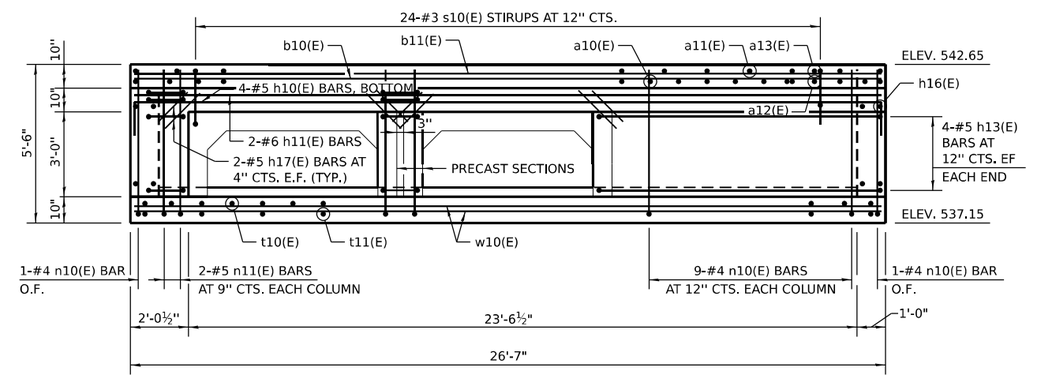

NORTH WALL ELEVATION

NOTE A

PROVIDE A 2'-11" ∅ 1" DEEP RECESS IN THE TOP SLAB, CENTERED OVER THE 2'-0" OPENING, FOR THE FRAME AND LID. FRAME SHALL BE SET ON AN INITIAL ⅜" MIN. GROUT BED (2:1 SAND AND PORTLAND CEMENT, VERY DRY MIX) TO MATCH RIM ELEVATION SHOWN ON DRAINAGE PLANS.

LEGEND

E.F.	EACH FACE
I.F.	INSIDE FACE
O.F.	OUTSIDE FACE

NOTES

REINFORCEMENT BARS DESIGNATED (E) SHALL BE EPOXY COATED.

SEE SHEET 393 FOR SECTION A-A, ADDITIONAL ELEVATIONS AND DETAILS.

SEE SHEET 389 FOR TRIPLE PRECAST BOX CULVERT DETAILS.

WSP USA Inc.
30 N. LASALLE STREET
SUITE 4200
CHICAGO, IL 60602
TEL: (312) 782-8150

USER NAME = USSJ696614	DESIGNED - TB/MHD	REVISED -	
	DRAWN - TB/MHD	REVISED -	
PLOT SCALE = 5:4.0000 ':" / in.	CHECKED - LAS	REVISED -	
PLOT DATE = 11/6/2025	DATE - 11/7/2025	REVISED -	

STATE OF ILLINOIS
DEPARTMENT OF TRANSPORTATION

DRAINAGE DETAILS – US 6 COMPENSATORY STORAGE STRUCTURE
JUNCTION CHAMBER 2 – STA. 229+71 (1 OF 2)

SCALE: NONE | SHEET 6 OF 11 SHEETS | STA. 229+71 TO STA. 229+71

F.A.I. RTE.	SECTION	COUNTY	TOTAL SHEETS	SHEET NO.
80	FAI 80 21 STRUCTURE 2	WILL	1230	392
		CONTRACT NO. 62R23		
		ILLINOIS	FED. AID PROJECT	

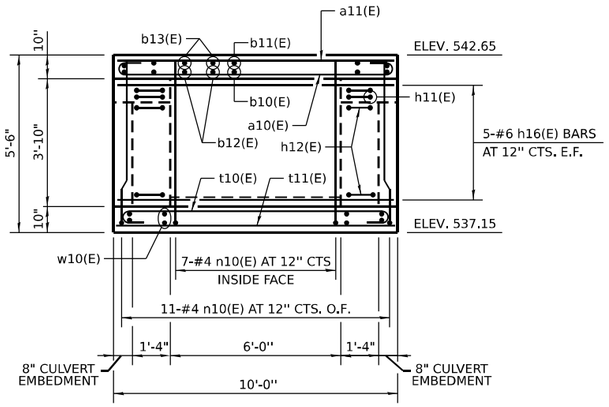

EAST WALL ELEVATION

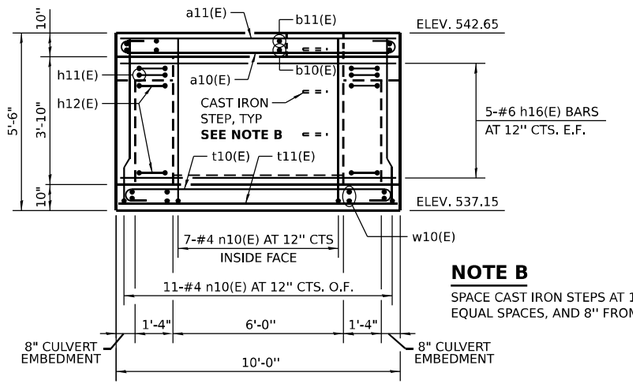

WEST WALL ELEVATION

NOTE B

SPACE CAST IRON STEPS AT 12" TO 18", EQUAL SPACES, AND 8" FROM TOP OF SLAB.

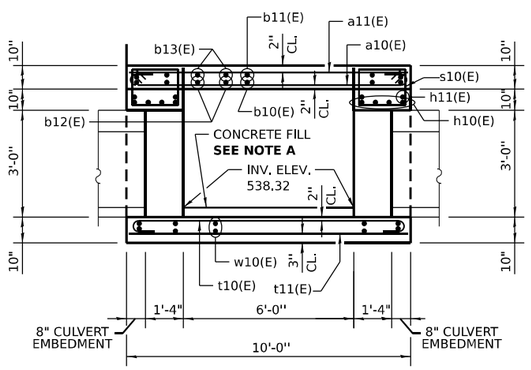

SECTION A-A

NOTE A

PLACE CONCRETE FILL AFTER INSTALLATION OF BOX CULVERT AND JUNCTION CHAMBER WALLS. MATCH TOP OF FILL ELEVATION TO BOX CULVERT INVERT ELEVATION 538.91.

BILL OF MATERIAL

(FOR INFORMATION ONLY)

BAR	NO.	SIZE	LENGTH	SHAPE
a10(E)	50	#6	11'-0"	
a11(E)	18	#5	9'-8"	
a12(E)	5	#6	7'-0"	
a13(E)	1	#5	5'-8"	
b10(E)	10	#6	26-3"	
b11(E)	10	#4	26-3"	
b12(E)	2	#6	23-3"	
b13(E)	2	#4	23-3"	
b14(E)	2	#6	9'-6"	
h10(E)	8	#5	28-0"	
h11(E)	4	#6	26'-3"	
h12(E)	36	#5	5'-5"	
h13(E)	8	#5	9'-3"	
h16(E)	20	#6	9'-8"	
h17(E)	40	#5	2'-0"	
n10(E)	58	#4	5'-10"	
n11(E)	24	#5	6'-0"	
s10(E)	48	#3	6'-9"	
t10(E)	28	#6	11'-0"	
t11(E)	15	#5	9'-8"	
w10(E)	16	#5	26-3"	
* REINFORCEMENT BARS, EPOXY COATED			POUND	4360
* CONCRETE STRUCTURES			CU YD	25.3
* FRAMES AND LIDS, TYPE 1, OPEN LID			EACH	1
* CAST IRON STEPS			EACH	3

NOTES

REINFORCEMENT BARS DESIGNATED (E) SHALL BE EPOXY COATED.

SEE SHEET 391 FOR BAR BENDING DETAILS.

PROVIDE A 24" INSIDE DIA. CONCRETE ADJUSTING RING OF THE THICKNESS REQUIRED TO SET THE RIM TO THE ELEVATION SHOWN ON THE DRAINAGE PLANS. COST INCLUDED WITH THE JUNCTION CHAMBER PAY ITEM.

SEE SHEET 389 FOR TRIPLE PRECAST BOX CULVERT DETAILS.

SEE STANDARD 602701 FOR DETAILS OF CAST IRON STEPS.

SEE STANDARD 604001 FOR DETAILS OF FRAME AND LID.

THE JUNCTION CHAMBER AT STATION 229+71 WILL BE PAID FOR AS JUNCTION CHAMBER NO. 2.

* INCLUDED IN THE COST OF JUNCTION CHAMBER NO. 2.

LEGEND

E.F. EACH FACE
I.F. INSIDE FACE
O.F. OUTSIDE FACE

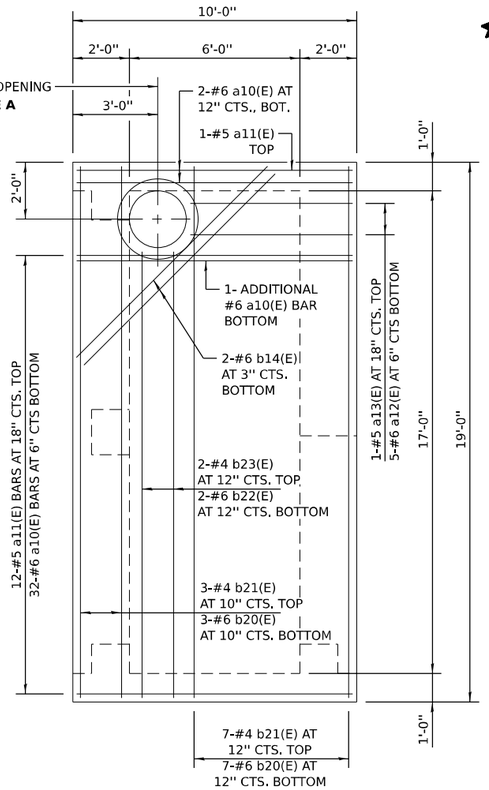

TOP SLAB PLAN

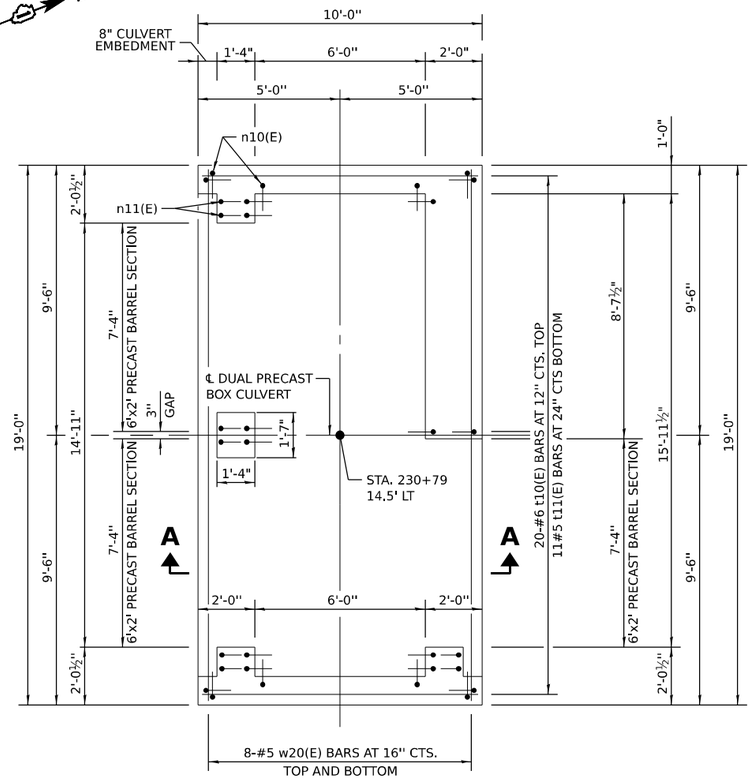

BOTTOM SLAB PLAN

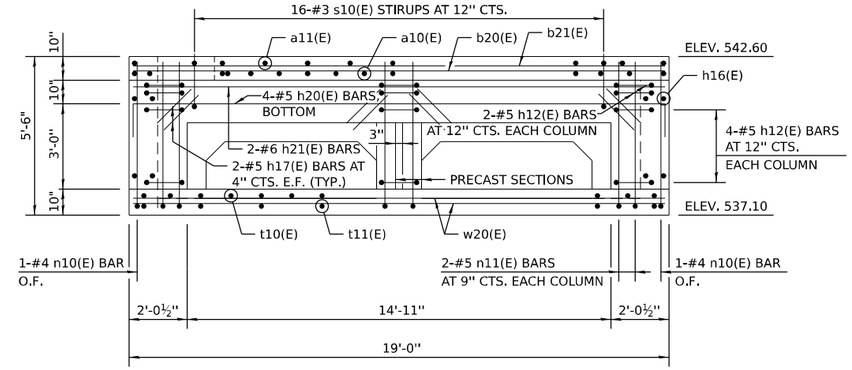

SOUTH WALL ELEVATION

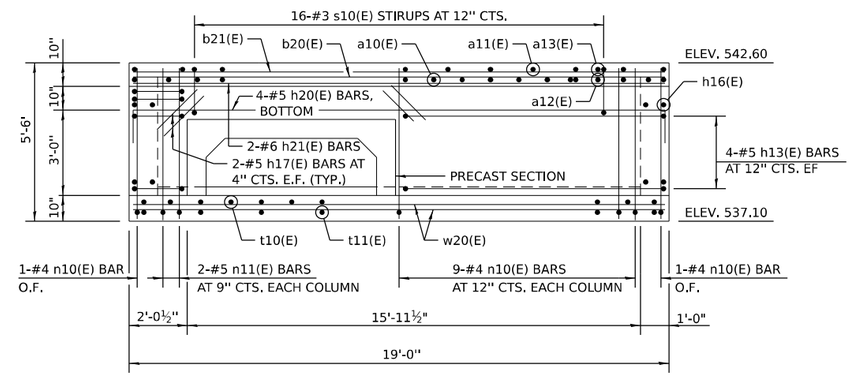

NORTH WALL ELEVATION

NOTE A

PROVIDE A 2'-11'' ∅ 1'' DEEP RECESS IN THE TOP SLAB, CENTERED OVER THE 2'-0'' OPENING, FOR THE FRAME AND LID. FRAME SHALL BE SET ON AN INITIAL ⅜'' MIN. GROUT BED (2:1 SAND AND PORTLAND CEMENT, VERY DRY MIX) TO MATCH RIM ELEVATION SHOWN ON DRAINAGE PLANS.

GENERAL NOTES

REINFORCEMENT BARS DESIGNATED (E) SHALL BE EPOXY COATED.

SEE SHEET 395 FOR SECTION A-A, ADDITIONAL ELEVATIONS AND DETAILS.

SEE SHEET 388 FOR SINGLE AND DUAL PRECAST BOX CULVERT DETAILS.

LEGEND

E.F.	EACH FACE
I.F.	INSIDE FACE
O.F.	OUTSIDE FACE

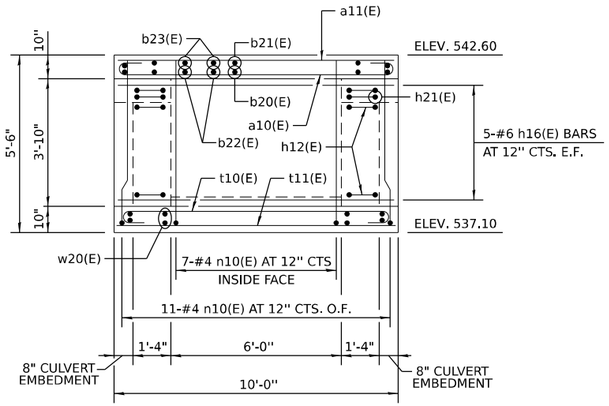

EAST WALL ELEVATION

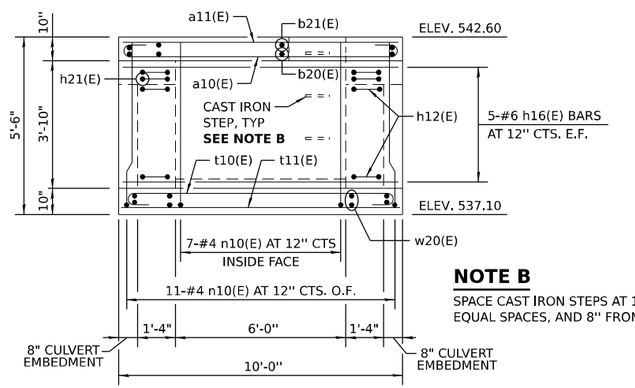

WEST WALL ELEVATION

NOTE B

SPACE CAST IRON STEPS AT 12" TO 18", EQUAL SPACES, AND 8" FROM TOP OF SLAB.

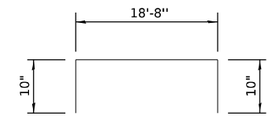

BAR h20(E)

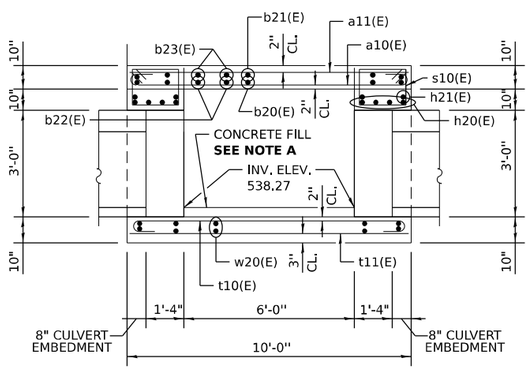

SECTION A-A

NOTE A

PLACE CONCRETE FILL AFTER INSTALLATION OF BOX CULVERT AND JUNCTION CHAMBER WALLS. MATCH TOP OF FILL ELEVATION TO BOX CULVERT INVERT ELEVATION 538.86.

BILL OF MATERIAL

(FOR INFORMATION ONLY)

	BAR	NO.	SIZE	LENGTH	SHAPE
	a10(E)	35	#6	11'-0"	
	a11(E)	13	#5	9'-8"	
	a12(E)	5	#6	7'-0"	
	a13(E)	1	#5	5'-8"	
	b14(E)	2	#6	9'-6"	
	b20(E)	10	#6	18'-8"	
	b21(E)	10	#4	18'-8"	
	b22(E)	2	#6	15'-8"	
	b23(E)	2	#4	15'-8"	
	h12(E)	24	#5	5'-5"	
	h13(E)	8	#5	9'-3"	
	h16(E)	20	#6	9'-8"	
	h17(E)	20	#5	2'-0"	
	h20(E)	8	#5	20'-4"	
	h21(E)	4	#6	18'-8	
	n10(E)	58	#4	5'-10"	
	n11(E)	16	#5	6'-0"	
	s10(E)	32	#3	6'-9"	
	t10(E)	20	#6	11'-0"	
	t11(E)	11	#5	9'-8"	
	w20(E)	16	#5	18'-8"	
*	REINFORCEMENT BARS, EPOXY COATED			POUND	3260
*	CONCRETE STRUCTURES			CU YD	19.2
*	FRAMES AND LIDS, TYPE 1, OPEN LID			EACH	1
*	CAST IRON STEPS			EACH	3

GENERAL NOTES

REINFORCEMENT BARS DESIGNATED (E) SHALL BE EPOXY COATED.

SEE SHEET 391 FOR ADDITIONAL BAR BENDING DETAILS.

PROVIDE A 24" INSIDE DIA. CONCRETE ADJUSTING RING OF THE THICKNESS REQUIRED TO SET THE RIM TO THE ELEVATION SHOWN ON THE DRAINAGE PLANS. COST INCLUDED WITH THE JUNCTION CHAMBER PAY ITEM.

SEE SHEET 388 FOR SINGLE AND DUAL PRECAST BOX CULVERT DETAILS.

SEE STANDARD 602701 FOR DETAILS OF CAST IRON STEPS.

SEE STANDARD 604001 FOR DETAILS OF FRAME AND LID.

THE JUNCTION CHAMBER AT STATION 230+79 WILL BE PAID FOR AS JUNCTION CHAMBER NO. 3.

* INCLUDED IN THE COST OF JUNCTION CHAMBER NO. 3

LEGEND

E.F. EACH FACE
I.F. INSIDE FACE
O.F. OUTSIDE FACE

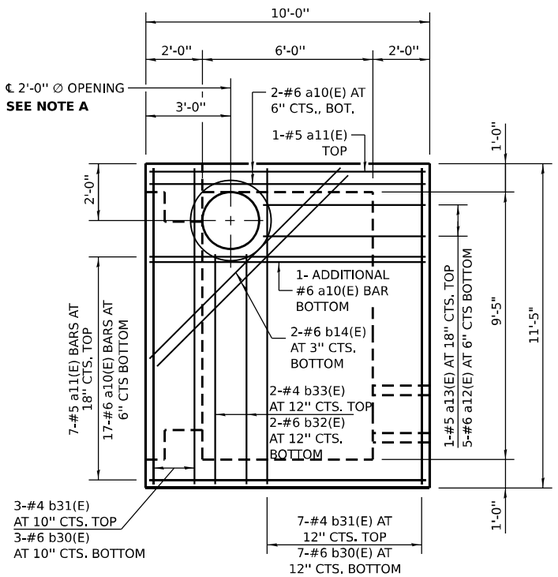

TOP SLAB PLAN

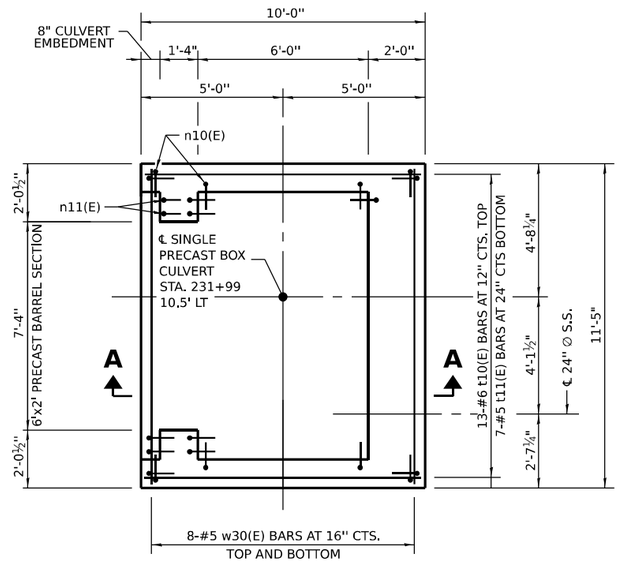

BOTTOM SLAB PLAN

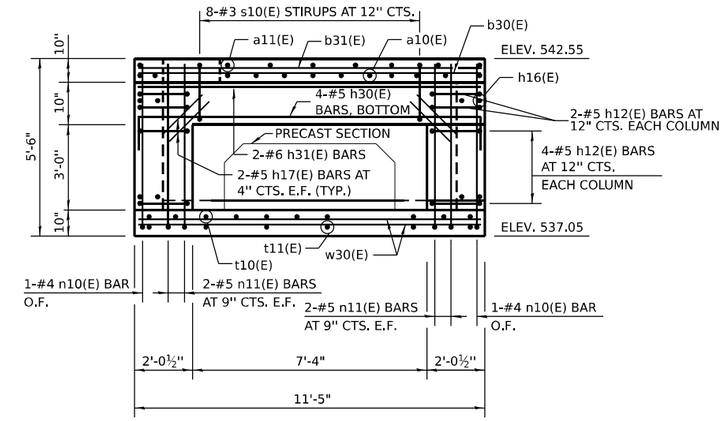

SOUTH WALL ELEVATION

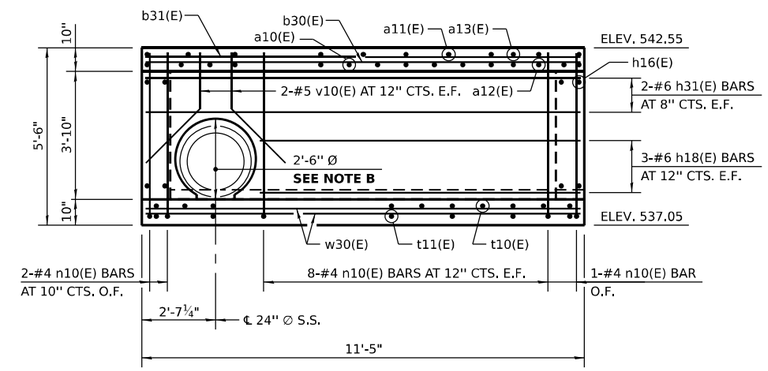

NORTH WALL ELEVATION

NOTE A

PROVIDE A 2'-11" ∅ 1" DEEP RECESS IN THE TOP SLAB, CENTERED OVER THE 2'-0" OPENING, FOR THE FRAME AND LID. FRAME SHALL BE SET ON AN INITIAL ⅜" MIN. GROUT BED (2:1 SAND AND PORTLAND CEMENT, VERY DRY MIX) TO MATCH RIM ELEVATION SHOWN ON DRAINAGE PLANS.

NOTE B

PROVIDE A 2'-10" Ø FORMED HOLE IN THE WALL FOR THE 24" INSIDE DIA. STORM SEWER.

NOTES

REINFORCEMENT BARS DESIGNATED (E) SHALL BE EPOXY COATED.

SEE SHEET 397 FOR SECTIONS A-A AND B-B, ADDITIONAL ELEVATIONS AND DETAILS.

SEE SHEET 388 FOR SINGLE PRECAST BOX CULVERT DETAILS.

LEGEND

E.F.	EACH FACE
I.F.	INSIDE FACE
O.F.	OUTSIDE FACE

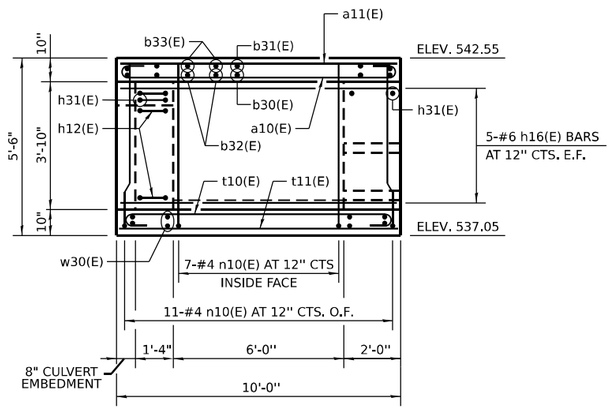

EAST WALL ELEVATION

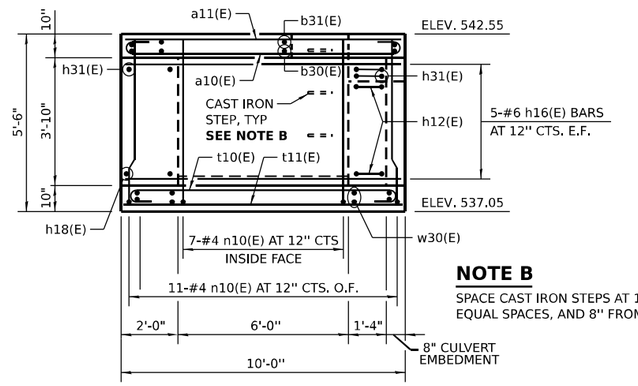

WEST WALL ELEVATION

NOTE B

SPACE CAST IRON STEPS AT 12" TO 18", EQUAL SPACES, AND 8" FROM TOP OF SLAB.

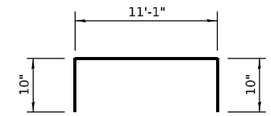

BAR h30(E)

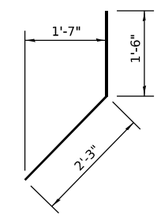

BAR v10(E)

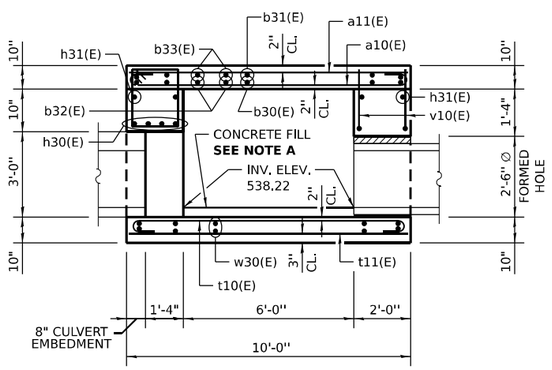

SECTION A-A

NOTE A

PLACE CONCRETE FILL AFTER INSTALLATION OF BOX CULVERT AND JUNCTION CHAMBER WALLS. MATCH TOP OF FILL ELEVATION TO BOX CULVERT INVERT ELEVATION 538.81.

BILL OF MATERIAL

(FOR INFORMATION ONLY)

	BAR	NO.	SIZE	LENGTH	SHAPE
	a10(E)	20	#6	11'-0"	
	a11(E)	8	#5	9'-8"	
	a12(E)	5	#6	7'-0"	
	a13(E)	1	#5	5'-8"	
	b14(E)	2	#6	9'-6"	
	b30(E)	10	#6	11'-1"	
	b31(E)	10	#4	11'-1"	
	b32(E)	2	#6	8'-1"	
	b33(E)	2	#4	8'-1"	
	h12(E)	12	#5	5'-5"	
	h16(E)	20	#6	9'-8"	
	h17(E)	4	#5	2'-0"	
	h18(E)	6	#6	7'-1"	
	h30(E)	4	#5	12'-9"	
	h31(E)	6	#6	11'-1"	
	n10(E)	57	#4	5'-10"	
	n11(E)	8	#5	6'-0"	
	s10(E)	8	#3	6'-9"	
	t10(E)	13	#6	11'-0"	
	t11(E)	7	#5	9'-8"	
	v10(E)	4	#5	3'-9"	
	w30(E)	16	#5	11'-1"	
*	REINFORCEMENT BARS, EPOXY COATED			POUND	2140
*	CONCRETE STRUCTURES			CU YD	10.7
*	FRAMES AND LIDS, TYPE 1, OPEN LID			EACH	1
*	CAST IRON STEPS			EACH	3

NOTES

REINFORCEMENT BARS DESIGNATED (E) SHALL BE EPOXY COATED.

SEE SHEET 391 FOR ADDITIONAL BAR BENDING DETAILS.

PROVIDE A 24" INSIDE DIA. CONCRETE ADJUSTING RING OF THE THICKNESS REQUIRED TO SET THE RIM TO THE ELEVATION SHOWN ON THE DRAINAGE PLANS. COST INCLUDED WITH THE JUNCTION CHAMBER PAY ITEM.

SEE SHEET 388 FOR SINGLE PRECAST BOX CULVERT DETAILS.

SEE STANDARD 602701 FOR DETAILS OF CAST IRON STEPS.

SEE STANDARD 604001 FOR DETAILS OF FRAME AND LID.

THE JUNCTION CHAMBER AT STATION 231+99 WILL BE PAID FOR AS JUNCTION CHAMBER NO. 4.

* INCLUDED IN THE COST OF JUNCTION CHAMBER NO. 4.

LEGEND

E.F. EACH FACE
I.F. INSIDE FACE
O.F. OUTSIDE FACE

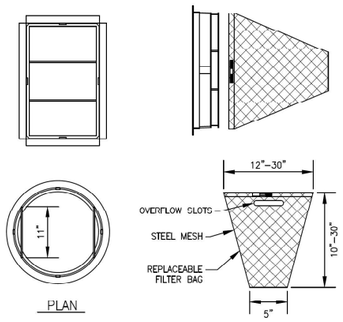

GENERAL NOTES:

FRAME: TOP RING CONSTRUCTED FROM 1 1/4" x 1 1/4" x 1/8" ANGLE. BASE RING CONSTRUCTED OF 1 1/2" x 1/2" x 1/8" CHANNEL. HANDLES & SUSPENSION BRACKETS CONSTRUCTED FROM 1/4" x 1 1/4" FLAT. ALL STEEL CONFORMING TO ASTM–A36.

REPLACEABLE BAG: CONSTRUCTED FROM 4 OZ./SQ. YD. NON–WOVEN POLYPROPYLENE GEOTEXTILE REINFORCED WITH POLYESTER MESH. CONNECTED TO BASE RING WITH STAINLESS STEEL STRAP & LOCK.

STEEL MESH: REMOVABLE STAINLESS STEEL MESH STRAINER BASKET. 1/4" DIA. HOLE SIZE. 58% OPEN AREA.

NOT TO SCALE

CITY OF JOLIET, ILLINOIS

INLET PROTECTION FILTER DETAIL
GEN–02

DATE: OCT. 2017

NOTE:
PROJECT MANUAL REFERS TO "PROJECT SPECIFICATIONS", NOT TO IDOT STANDARD SPECIFICATIONS.

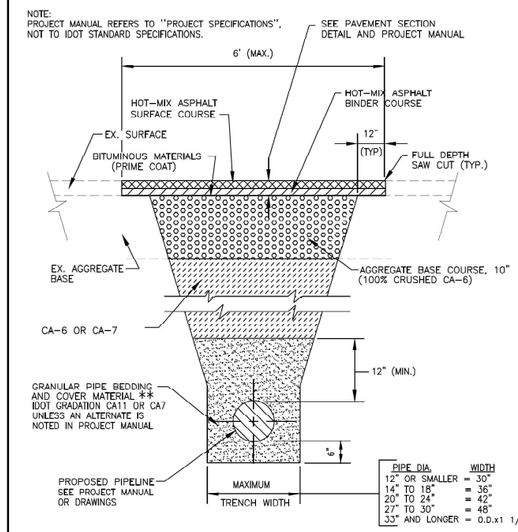

FOR PAVEMENT WITH AGGREGATE BASE AND COMPACTED GRANULAR BACKFILL MATERIAL

** FOR FLEXIBLE THERMOPLASTIC PIPE COMPLY WITH ASTM D2321, CLASS IA, IB, OR II., (IDOT GRADATION CA15)

FOR RIGID PIPE COMPLY WITH ASTM C12, BEDDING CLASS B.

NOT TO SCALE

CITY OF JOLIET, ILLINOIS

TYPICAL TRENCH DETAIL
PAVEMENT AREA
AGGREGATE BASE
GEN–04
DATE: OCT. 2017

NOTES:
1. PROJECT MANUAL REFERS TO "PROJECT SPECIFICATIONS", NOT TO IDOT STANDARD SPECIFICATIONS.
2. FARM FIELDS, GARDENS, AND WETLAND AREAS MAY REQUIRE STRIPPING, STOCKPILING, AND REPLACING ORIGINAL MATERIAL TO A SPECIFIC DEPTH. SEE PROJECT MANUAL OR GENERAL NOTES FOR REQUIREMENTS.

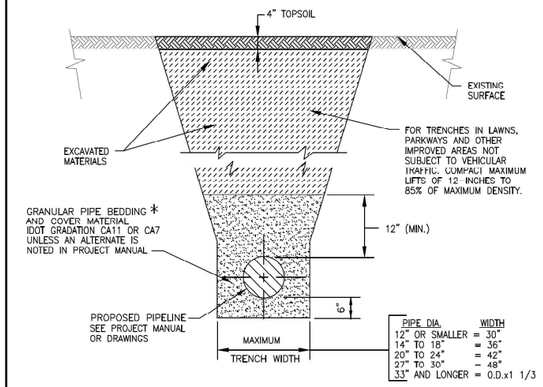

FOR NON–PAVED AREAS

* FOR HDPE PIPE COMPLY WITH ASTM 2321, CLASS I OR II.
FOR RIGID PIPE COMPLY WITH ASTM C12, BEDDING CLASS B.

NOT TO SCALE

CITY OF JOLIET, ILLINOIS

TYPICAL TRENCH DETAIL
NON PAVED AREAS
GEN–05

DATE: OCT. 2017

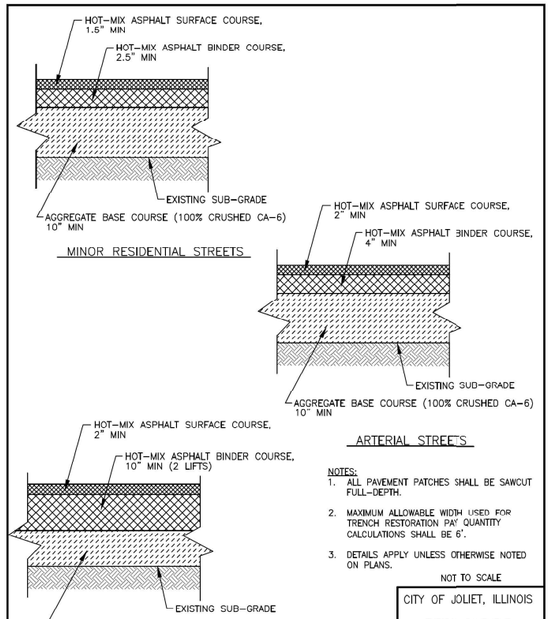

NOTES:
1. ALL PAVEMENT PATCHES SHALL BE SAWCUT FULL–DEPTH.
2. MAXIMUM ALLOWABLE WIDTH USED FOR TRENCH RESTORATION PAY QUANTITY CALCULATIONS SHALL BE 6'.
3. DETAILS APPLY UNLESS OTHERWISE NOTED ON PLANS.

NOT TO SCALE

CITY OF JOLIET, ILLINOIS

TYPICAL PAVEMENT SECTION
PVT–02

DATE: OCT. 2017

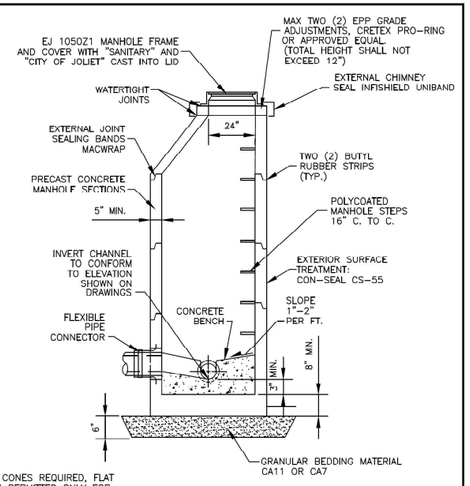

NOTE:

1. ECCENTRIC CONES REQUIRED, FLAT SLAB TOPS PERMITTED ONLY FOR MANHOLES TOO SHALLOW FOR CONES.
2. MANHOLE DIAMETER SHALL BE DETERMINED BY THE SEWER DEPTH, THE SEWER OUTSIDE DIAMETER, RELATIVE ANGLES OF SEWERS TO EACH OTHER, THE SIZE OF HOLES CORED/CAST FOR BOOTS, AND A MINIMUM OF 8" BETWEEN CORED/CAST HOLES. FOR SEWER SIZES 8" THROUGH 15", USE 4'–0" DIAMETER. FOR SEWER DEPTHS 15' AND GREATER, USE 5'–0" DIAMETER.
3. ALL LIFT HOLES ARE TO BE GROUTED FROM THE INSIDE AND OUTSIDE BEFORE BACKFILLING.
4. MANHOLES THAT HAVE FORCE MAINS DISCHARGING INTO THEM SHALL BE COATED WITH SHERWIN WILLIAMS DURAPLATE 6100 OR RAVEN 405

NOT TO SCALE

CITY OF JOLIET, ILLINOIS

SANITARY MANHOLE DETAIL
SAN–01

DATE: OCT. 2017

NOTE:
USE OUTSIDE DROP WHEN ANY ENTERING SEWER INVERT DIFFERS BY 2'–0" OR MORE FROM INVERT OF MANHOLE. MATCH CROWN OF OUTLET PIPE WHERE OUTLET PIPE IS 30–INCH DIA. OR SMALLER. SEE PLAN SHEETS FOR INVERT ELEVATIONS FOR PIPE SIZES LARGER THAN 30–INCH DIAMETER.

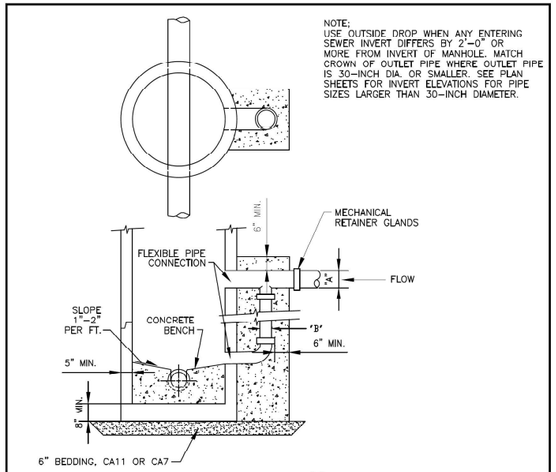

NOTES:

1. 8–INCH TO 12–INCH DIAMETER DROP: DUCTILE IRON CLASS 50. UTILIZE DUCTILE IRON RESTRAINED JOINT PIPE AND FITTINGS FOR DROP ELBOW, PIPE, AND TEE AT INCOMING SEWER. ENCASE ENTIRE DROP PIPE FROM BASE OF MANHOLE TO 6 INCHES ABOVE TOP OF INCOMING SEWER WITH 4000 PSI CONCRETE AT A MINIMUM THICKNESS OF 6 INCHES.
2. OVER 12–INCH DIAMETER DROP: DUCTILE IRON CLASS 50. ENCASE DROP ELBOW AT BASE OF MANHOLE TO 2 FEET ABOVE TOP OF ELBOW IN CONCRETE. UTILIZE DUCTILE IRON RESTRAINED JOINT PIPE AND FITTINGS FOR DROP ELBOW, PIPE, AND DUCTILE IRON TEE AT INCOMING SEWER. SUPPORT DROP PIPE TO MANHOLE WALL WITH STAINLESS STEEL BRACKETS AND STRAPPING WHERE DROPS ARE OVER 10 FEET LONG.

"A"– DIAMETER OF INCOMING SEWER
"B"– DIAMETER OF DROP PIPE

WHEN: "A"=12–INCH OR LESS, "B"="A" BUT NOT SMALLER THAN 8–INCH.
WHEN: "A"=GREATER THAN 12–INCH, BUT LESS THAN OR EQUAL TO 18–INCH, "B"=12–INCH.
WHEN: "A"=GREATER THAN 18–INCH, "B"=2/3 "A" MINIMUM.

NOT TO SCALE

CITY OF JOLIET, ILLINOIS

EXTERIOR DROP MANHOLE DETAIL
SAN–04

DATE: OCT. 2017

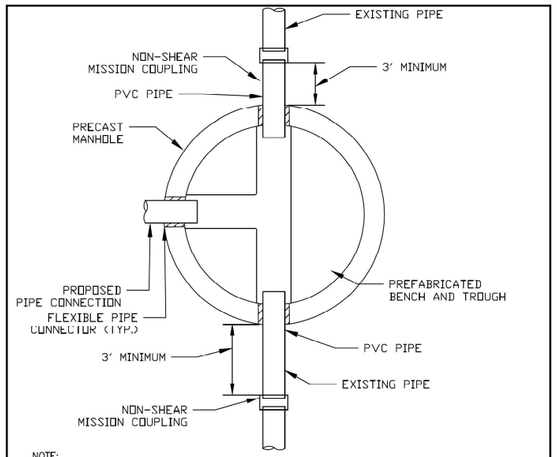

NOTE:

1. MANHOLE INSTALLATION MUST CONFORM TO CITY OF JOLIET STANDARD MANHOLE DETAIL (SAN–01).
2. EXTERNAL DROP CONNECTION MUST BE PROVIDED IF INVERT OF CONNECTING SEWER IS 24" OR MORE ABOVE THE INVERT OF OUTLET.
3. DOGHOUSE MANHOLES WILL NOT BE ACCEPTED UNLESS APPROVED BY THE ENGINEER.

NOT TO SCALE

CITY OF JOLIET, ILLINOIS

NEW SANITARY MANHOLE ON EXISTING SANITARY MAIN DETAIL
SAN–17
DATE: NOVEMBER 2022

MODEL: Default
FILE NAME: pw://transystems-pw.bentley.com:transyscorp-pw1-hosted/Documents/Projects_2018/CH401/401180022/03-WSP/Project Info/Utilities/CO)-V3-Utilities/62R23-ath-LSheets/D162R23-sht-details1.dgn

V3 Companies
7325 Janes Avenue
Woodridge, IL 60517
630.724.9200 phone
630.724.9202 fax
www.v3co.com

USER NAME = dpung	DESIGNED - CD	REVISED -	
	DRAWN - DP	REVISED -	
PLOT SCALE =	CHECKED - JH	REVISED -	
PLOT DATE = 11/5/2025	DATE - 11/7/2025	REVISED -	

STATE OF ILLINOIS
DEPARTMENT OF TRANSPORTATION

JOLIET DRAINAGE DETAILS

SCALE: NONE | SHEET 1 OF 3 SHEETS | STA. | TO STA.

F.A.I. RTE.	SECTION	COUNTY	TOTAL SHEETS	SHEET NO.
80	FAI 80 21 STRUCTURE 2	WILL	1230	398
		CONTRACT NO. 62R23		
	ILLINOIS	FED. AID PROJECT		

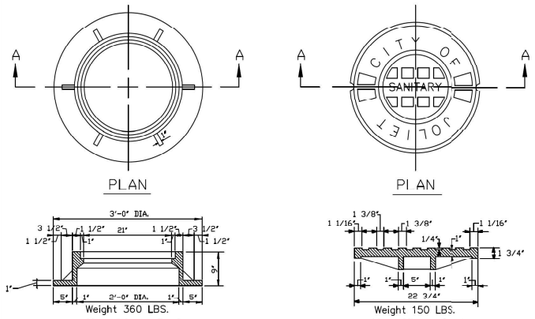

Sanitary Sewer:
East Jordan 1020 AGS cover and 1050Z1 frame W/Watertight Lid

NOT TO SCALE

CITY OF JOLIET, ILLINOIS

FRAME AND COVER CASTING
SAN-19

DATE: NOVEMBER 2022

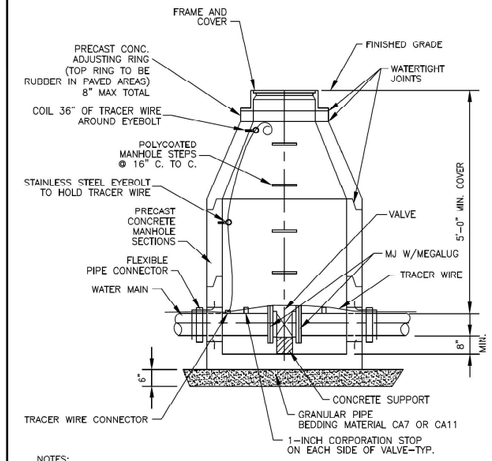

NOTES:

1. CONCENTRIC CONE REQUIRED FOR GATE VALVES, ECCENTRIC CONE REQUIRED FOR BUTTERFLY VALVES.
2. USE 4'-0" DIAMETER FOR WATER MAIN SIZES 4" THRU 10", 5'-0" FOR SIZES 12" OR GREATER
3. PROVIDE CAST IRON FRAME AND COVER WITH HEAVY DUTY LID, STAMPED WITH "CITY OF JOLIET" AND "WATER". EJ 1050Z1 OR NEENAH R170
4. ATTACH TRACER WIRE TO MAINTAIN MIN. 24" AWAY FROM STEPS

NOT TO SCALE

CITY OF JOLIET, ILLINOIS

WATER VALVE VAULT DETAIL
WTR-01

DATE: NOVEMBER. 2022

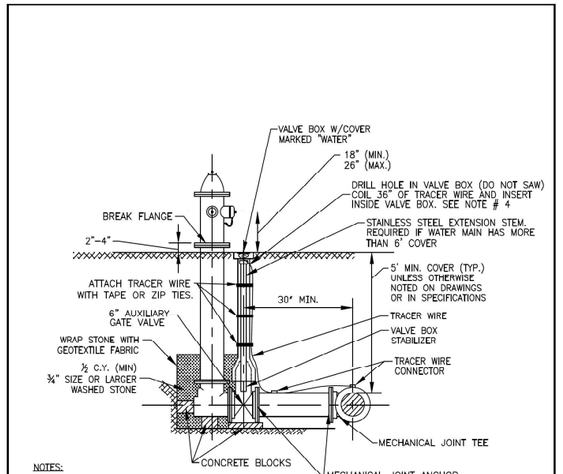

NOTES:

1. MUELLER CENTURION A423, CLOW MEDALLION OR E.J. 5BR250 (RED FOR MUNICIPAL TREATED WATER, GREEN FOR RAW WATER, YELLOW FOR PRIVATE HYDRANTS)
2. HYDRANTS SHALL BE LOCATED A MINIMUM OF 2 FEET BEHIND THE BACK OF CURB IN LOCATIONS SHOWN ON THE DRAWINGS
3. USE SWIVEL TEE AS CALLED OUT ON PLANS. 30" MINIMUM SEPARATION DOES NOT APPLY WHEN USING SWIVEL TEES.
4. ATTACH TRACER WIRE TO OUTSIDE OF VALVE BOX USING TAPE OR ZIP TIES. DRILL ⅜" DIA. HOLE IN VALVE BOX 6" FROM TOP OF VALVE BOX.

NOT TO SCALE

CITY OF JOLIET, ILLINOIS

FIRE HYDRANT DETAIL
WTR-03

DATE: NOVEMBER 2022

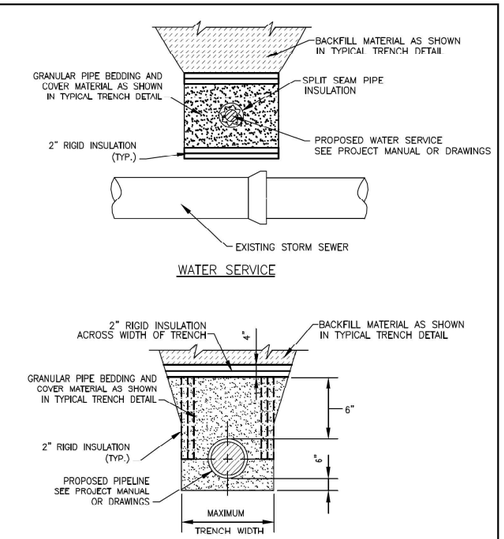

NOTES:

1. TO BE USED WHEN WATER MAIN AND / OR WATER SERVICE BURY DEPTH IS < 4' OR WHEN WATER SERVICE CROSSES ABOVE STORM SEWER.

NOT TO SCALE

CITY OF JOLIET, ILLINOIS

PIPE INSULATION DETAIL
WTR-04

DATE: OCT. 2017

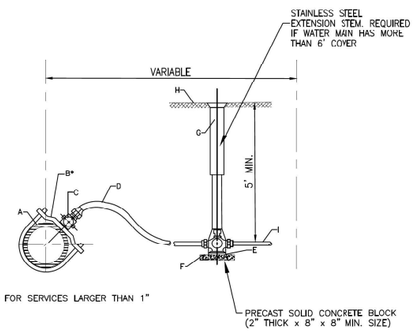

CONSTRUCTION NOTES

A. WATER MAIN
B. DUCTILE IRON, EPOXY COATED BODIES WITH DOUBLE ALLOY STEEL STRAPS AND DOUBLE BOLTS (FOUR BOLTS TOTAL). MUELLER DR2A SERIES OR EQUAL
C. CORPORATION STOP, A.Y. MCDONALD 74701 BQ
D. SERVICE PIPE, SEAMLESS SOFT TEMPERED COPPER TYPE – TYPE "K" 1" OR LARGER
E. CURB STOP, A.Y. MCDONALD 76104Q
F. CONCRETE BRICK SUPPORT
G. TYLER 6500 WITH BBAF VALVE BOX STABILIZER OR APPROVED EQUAL
H. FINISHED GRADE
I. CONNECT TO EXISTING SERVICE, PROVIDE ADAPTERS AS REQUIRED

NOTE: FOR 1 1/2" OR 2" SERVICE, ADD ENLARGED BASE FOR SERVICE BOX.

NOT TO SCALE

CITY OF JOLIET, ILLINOIS

WATER SERVICE CONNECTION DETAIL
WTR-06

DATE: OCT. 2017

DUCTILE IRON-RESTRAINT JOINT TYPE PIPE LENGTH (FEET)

FITTING TYPE	DIAMETER (IN)					
	4"	6"	8"	10"	12"	16"
HORIZONTAL BEND						
11.25°	5	5	5	5	5	5
22.5°	5	5	5	5	10	10
45°	5	10	10	10	15	15
90°	15	20	20	25	30	40
VERTICAL BEND						
45°	20	25	35	40	45	60
TEE	5	5	5	5	5	5
VALVE (OPERATING PRESSURE)	20	30	35	45	50	65
VALVE (TESTING PRESSURE)	40	60	75	90	105	135
REDUCER						
6" NOMINAL PIPE	30	–	–	–	–	–
8" NOMINAL PIPE	55	35	–	–	–	–
10" NOMINAL PIPE	75	55	30	–	–	–
12" NOMINAL PIPE	90	80	55	35	–	–
16" NOMINAL PIPE	125	115	100	80	60	–

NOTE:
RJT LENGTHS MAY VARY DEPENDING ON SITE CONDITIONS. LENGTHS SHOWN ARE MINIMUM PER 5' BURRY DEPTH OF WATER MAIN AND, AGGREGATE PIPE BACKFILL.

NOT TO SCALE

CITY OF JOLIET, ILLINOIS

POLYWRAPPED DI RJT DETAIL

WTR-09

DATE: NOVEMBER 2022

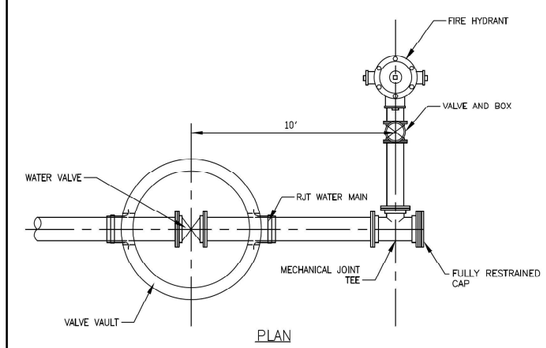

NOT TO SCALE

CITY OF JOLIET, ILLINOIS

WATER MAIN TERMINATION DETAIL
WTR-12

DATE: NOVEMBER 2022

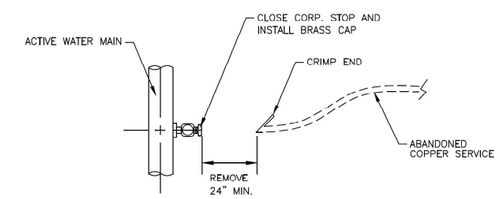

NOT TO SCALE

CITY OF JOLIET, ILLINOIS

WATER SERVICE ABANDONMENT COPPER PIPE DETAIL
WTR-13

DATE: NOVEMBER 2022

MODEL: Default
FILE NAME: pw://transystems-pw.bentley.com:transyscorp-pw1-hosted/Documents/Projects_2018/CH401/401180022/03-WSP/Project Info/Utilities/CO)-V3-Utilities/62R23-alt-LISheets/D162R23-alt-details2.dgn

V3 Companies
7325 Janes Avenue
Woodridge, IL 60517
630.724.9200 phone
630.724.9202 fax
www.v3co.com

USER NAME = dpung	DESIGNED - CD	REVISED -	
	DRAWN - DP	REVISED -	
PLOT SCALE =	CHECKED - JH	REVISED -	
PLOT DATE = 11/5/2025	DATE - 11/7/2025	REVISED -	

STATE OF ILLINOIS
DEPARTMENT OF TRANSPORTATION

JOLIET DRAINAGE DETAILS

SCALE: NONE | SHEET 2 OF 3 SHEETS | STA. TO STA.

F.A.I. RTE.	SECTION	COUNTY	TOTAL SHEETS	SHEET NO.
80	FAI 80 21 STRUCTURE 2	WILL	1230	399

CONTRACT NO. 62R23

ILLINOIS | FED. AID PROJECT

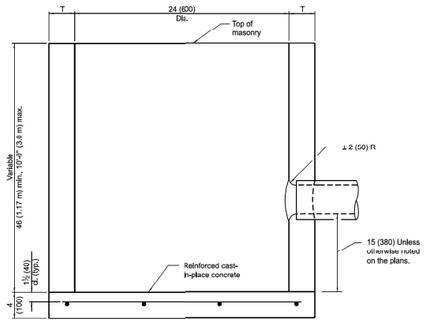

ELEVATION

ALTERNATE MATERIALS FOR WALLS	T (min)
Precast Reinforced Concrete Section	3 (75)
Concrete Masonry Unit	5 (125)
Cast-in-Place Concrete	6 (150)
Brick Masonry	8 (200)

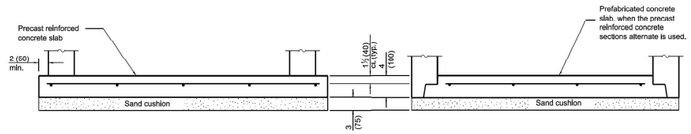

ALTERNATE BOTTOM SLAB

GENERAL NOTES

Bottom slabs shall be reinforced with a minimum of 0.27 sq. in./ft. (570 sq. mm/m) in both directions with a maximum spacing of 9 (230).

Bottom slabs may be connected to the riser as determined by the fabricator; however, only a single row of reinforcement around the perimeter may be utilized.

All dimensions are in inches (millimeters) unless otherwise shown.

Illinois Department of Transportation
APPROVED January 1, 2011 — ENGINEER OF POLICY AND PROCEDURES
APPROVED January 1, 2011 — ENGINEER OF DESIGN AND ENVIRONMENT
BUREAU OF BRIDGES

DATE	REVISIONS
1-1-11	Detailed rein. in slabs. Added max limit to height. Added general notes.
1-1-09	Switchod units to English (metric).

CATCH BASIN TYPE C

STANDARD 602011-02

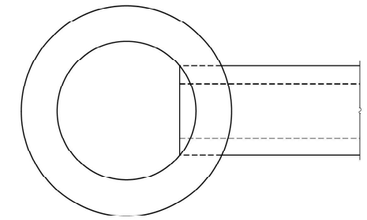

PLAN

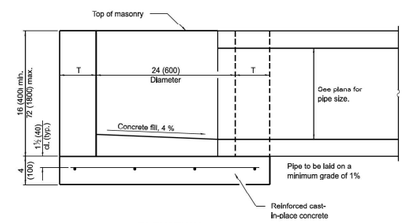

ELEVATION

ALTERNATE MATERIALS FOR WALLS	T
BRICK MASONRY	8 (200)
CAST-IN-PLACE CONCRETE	6 (150)
CONCRETE MASONRY UNIT	5 (125)
PRECAST REINFORCED CONCRETE SECTION	3 (75)

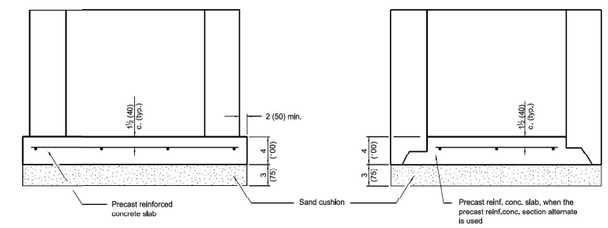

ALTERNATE METHODS

GENERAL NOTES

Bottom slabs shall be reinforced with a minimum of 0.24 sq. in./ft. (510 sq. mm/m) in both directions with a maximum spacing of 10 (250).

Bottom slabs may be connected to the riser as determined by the fabricator; however, only a single row of reinforcement around the perimeter may be utilized.

All dimensions are in inches (millimeters) unless otherwise shown.

Illinois Department of Transportation
APPROVED January 1, 2014 — ENGINEER OF POLICY AND PROCEDURES
APPROVED January 1, 2014 — ENGINEER OF DESIGN AND ENVIRONMENT
BUREAU OF BRIDGES

DATE	REVISIONS
1-1-14	Increased height to 72 (1800) maximum.
1-1-11	Detailed rein. in slabs. Added max. limit to hight. Added general notes.

INLET - TYPE A

STANDARD 602301-04

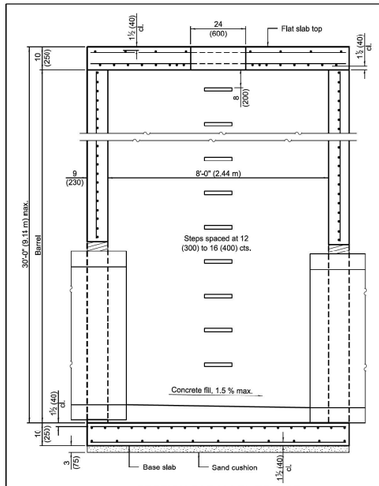

SECTION PARALLEL TO PIPE
(Without conical top riser)

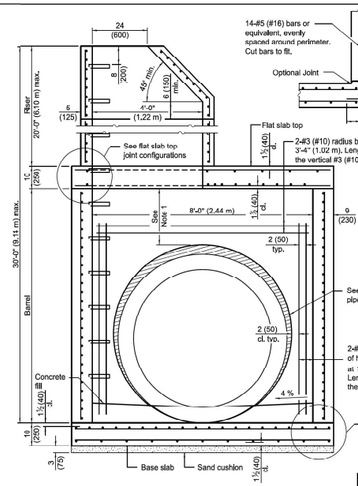

SECTION PERPENDICULAR TO PIPE
(With conical top riser)

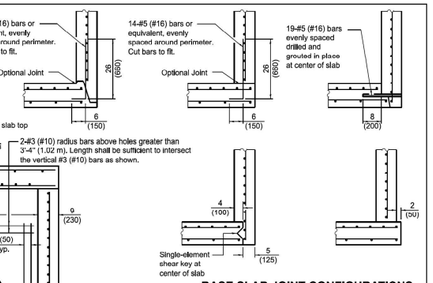

BASE SLAB JOINT CONFIGURATIONS

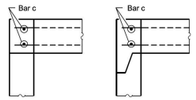

FLAT SLAB TOP JOINT CONFIGURATIONS
(Shown at access hole)

GEOMETRIC LIMITS FOR PIPE PENETRATION HOLES

Note 1: A minimum of 12 (300) of monolithic reinforced concrete shall be maintained above pipe penetration holes > 3'-4" (1.02 m).

Note 2: A minimum 12 (300) inside arc length of reinforced concrete shall be maintained between pipe penetration holes > 15 (380).

Note 3: A maximum of 60 percent of the inside perimeter of the reinforced concrete manhole walls may be removed.

Note 4: Horizontal joints that intersect pipe penetration holes > 15 (380) shall have one joint splice for every location around the perimeter of the joint where the inside arc length between pipe penetration holes is < 24 (600). See joint splice detail.

Note 5: The recommended pipe penetration hole is equal to the O.D. of the pipe plus 4 (100).

Note 6: Only pipe penetration holes ≤ 15 (380) are allowed in riser sections.

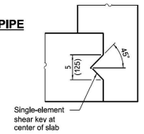

SHEAR KEY GEOMETRY
(Reinforcement not shown for clarity)

GENERAL NOTES

Pipe holes shall be formed to facilitate proper placement of hole reinforcement.

The manufacturer shall ensure that all precast manhole sections are additionally reinforced where required to resist damage from handling, shipping and installation stresses.

Lifting holes shall be located in the sections as per the manufacturer's recommendations.

See Standard 602701 for details of manhole steps.

All dimensions are in inches (millimeters) unless otherwise noted.

Illinois Department of Transportation
APPROVED January 1, 2021 — ENGINEER OF POLICY AND PROCEDURES
APPROVED January 1, 2021 — ENGINEER OF DESIGN AND ENVIRONMENT
BUREAU OF BRIDGES

DATE	REVISIONS
1-1-21	Revised Note 1 and lifting hole
	general note.
3-1-19	Moved wall reinforcement from
	inside face to middle.

PRECAST MANHOLE TYPE A 8' (2.44 m) DIAMETER
(Sheet 1 of 3)

STANDARD 602416-09

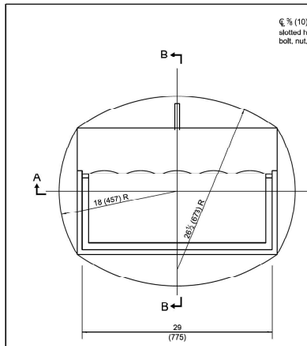

CAST FRAME

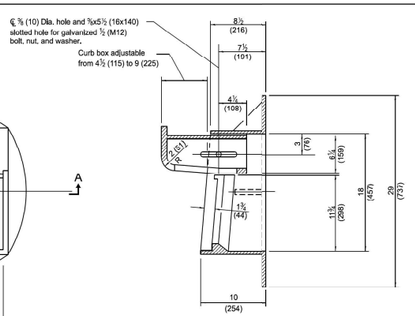

SECTION B-B

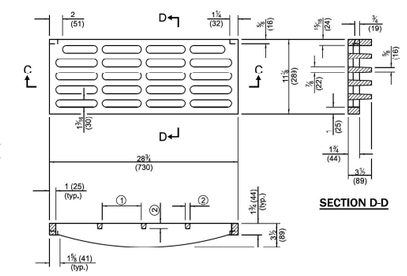

SECTION D-D

SECTION C-C

① = 6¼ (159) max. (typ.)
② = ¾ (19) min. (typ.)

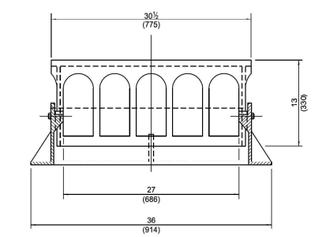

SECTION A-A

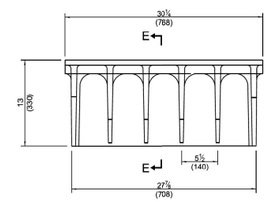

ALTERNATE CURB BOX

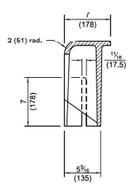

SECTION E-E

CAST GRATE

All dimensions are in inches (millimeters) unless otherwise shown.

Illinois Department of Transportation
APPROVED January 1, 2015 — ENGINEER OF POLICY AND PROCEDURES
APPROVED January 1, 2015 — ENGINEER OF DESIGN AND ENVIRONMENT
BUREAU OF BRIDGES

DATE	REVISIONS
1-1-15	Revised dimensions of frame and alternate curb box.
4-1-09	Switched units to English (metric).

FRAME AND GRATE TYPE 11

STANDARD 604051-04

MODEL: Default
FILE NAME: pw://transystems-pw.bentley.com:transyscorp-pw1-hosted/Documents/Projects_2018/CH401/401180022/03-WSP/Project_Info/Utilities/CO)-V3-Utilities/62R23-RB-1/Sheets/0162R23-sht-details3.dgn

V3 Companies
7325 Janes Avenue
Woodridge, IL 60517
630.724.9200 phone
630.724.9202 fax
www.v3co.com

USER NAME = dpung	DESIGNED - CD	REVISED -	
	DRAWN - DP	REVISED -	
PLOT SCALE =	CHECKED - JH	REVISED -	
PLOT DATE = 11/5/2025	DATE - 11/7/2025	REVISED -	

STATE OF ILLINOIS
DEPARTMENT OF TRANSPORTATION

JOLIET DRAINAGE DETAILS

SCALE: NONE | SHEET 3 OF 3 SHEETS | STA. TO STA.

F.A.I. RTE.	SECTION	COUNTY	TOTAL SHEETS	SHEET NO.
80	FAI 80 21 STRUCTURE 2	WILL	1230	400
		CONTRACT NO. 62R23		
		ILLINOIS	FED. AID PROJECT	