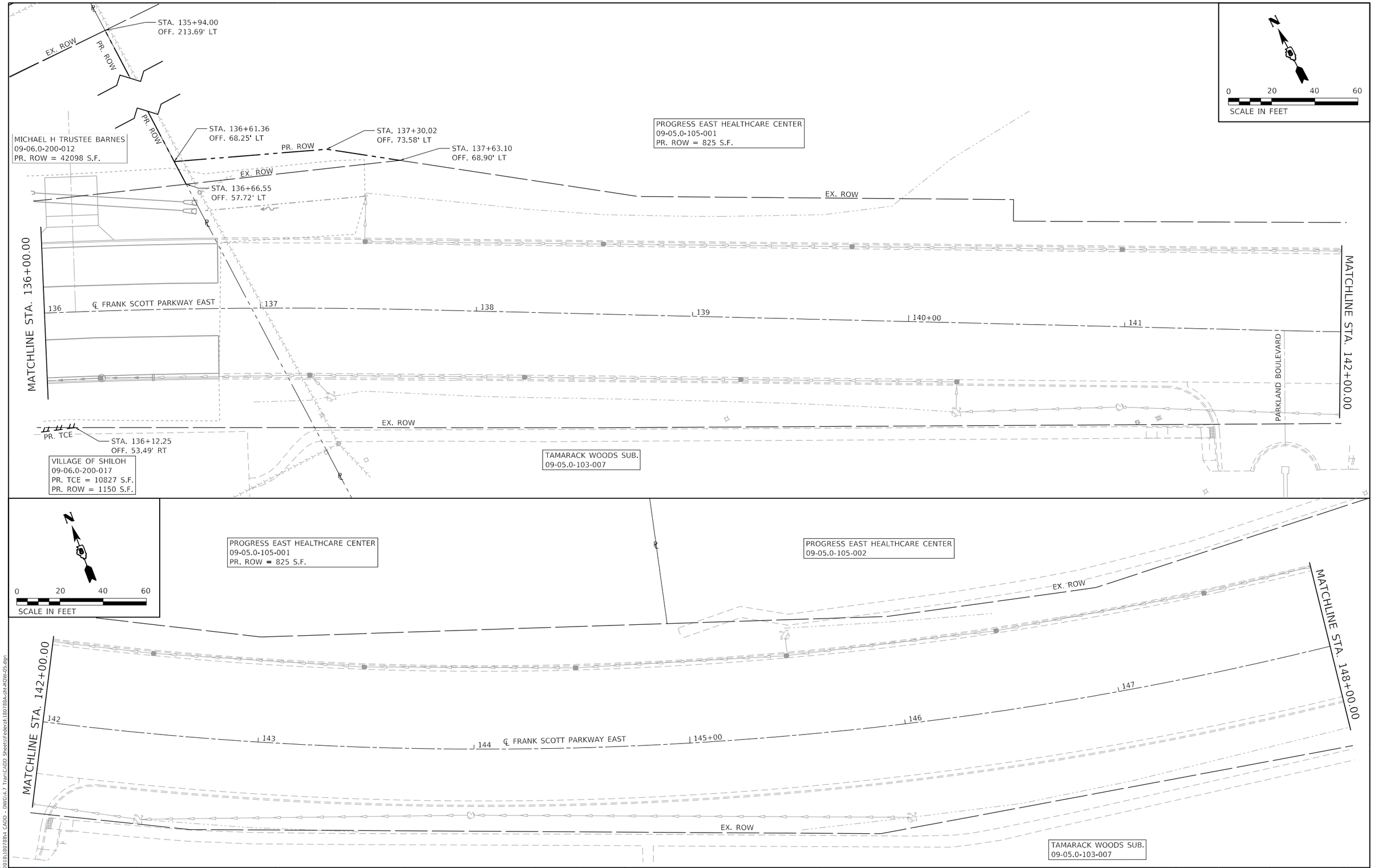

MODEL: Default
FILE NAME: P:\2018\18078B\4 CADD - DWG\4.7 Tran\CADD Sheets\Federal\18078BA-sht-ROW-05.dgn

TWM ENGINEERING & GEOSPATIAL SERVICES	TWM, INC. WWW.TWM-INC.COM IL DESIGN FIRM LICENSE NO: 184-001220	USER NAME = Kdeconcini	DESIGNED - EKF	REVISED -	ST. CLAIR COUNTY DEPARTMENT OF ROADS AND BRIDGES
			DRAWN - EKF/KDD	REVISED -	
		PLOT SCALE = 40.0001 ' / in.	CHECKED - JWS	REVISED -	
		PLOT DATE = 10/17/2025	DATE - 06/2025	REVISED -	

ROW PLAN

SCALE: 1"=20' | SHEET 5 OF 7 SHEETS | STA. 136+00.00 | TO STA. 148+00.00

F.A.U. RTE.	SECTION	COUNTY	TOTAL SHEETS	SHEET NO.
9330	24-00301-26-PW	ST. CLAIR	191	101

CONTRACT NO. 97872

ILLINOIS | FED. AID PROJECT

PROGRESS EAST HEALTHCARE CENTER
09-05.0-105-002

PROGRESS EAST HEALTHCARE CENTER
09-05.0-105-003

CARE DRIVE

EX. ROW

MATCHLINE STA. 148+00.00

MATCHLINE STA. 154+00.00

148

149

150+00

℄ FRANK SCOTT PARKWAY EAST

151

152

153

0+00

PARKLAND BOULEVARD

EX. ROW

EX. ROW

TAMARACK WOODS SUB.
09-05.0-103-007

N

0 20 40 60
SCALE IN FEET

PROGRESS EAST HEALTHCARE CENTER
09-05.0-105-003

EX. ROW

MATCHLINE STA. 154+00.00

MATCHLINE STA. 160+00.00

154

155+00

℄ FRANK SCOTT PARKWAY EAST

156

157

158

159

HAVENHILLS INVESTMENT CO.
09-05.0-103-001

EX. ROW

HAVENHILLS INVESTMENT CO.
09-05.0-103-001

N

0 20 40 60
SCALE IN FEET

MODEL: Default
FILE NAME: P:\2018\1807884 CADD - DWG\47 Tran\CADD Sheets\Federal\1807884-int-HOW-06.dgn

TWM ENGINEERING & GEOSPATIAL SERVICES	TWM, INC. WWW.TWM-INC.COM IL DESIGN FIRM LICENSE NO: 184-001220	USER NAME = efisher	DESIGNED - EKF	REVISED -
			DRAWN - EKF/KDD	REVISED -
		PLOT SCALE = 40.0000 ' / in.	CHECKED - JWS	REVISED -
		PLOT DATE = 6/24/2025	DATE - 06/2025	REVISED -

ST. CLAIR COUNTY DEPARTMENT OF ROADS AND BRIDGES

ROW PLAN

SCALE: 1"=20' | SHEET 6 OF 7 SHEETS | STA. 148+00.00 TO STA. 160+00.00

F.A.U. RTE.	SECTION	COUNTY	TOTAL SHEETS	SHEET NO.
9330	24-00301-26-PW	ST. CLAIR	191	102
		CONTRACT NO. 97872		
		ILLINOIS	FED. AID PROJECT	

PROGRESS EAST HEALTHCARE CENTER
09-05.0-105-003

METRO EAST SERVICES INC
09-05.0-208-009

HAVENHILLS INVESTMENT CO.
09-05.0-103-001

TRDS LLC
09-05.0-104-003

EX. ROW

℄ CROSS STREET

196

197

198

MATCHLINE STA. 160+00.00

160+00 ℄ FRANK SCOTT PARKWAY EAST 161 162 163 164 165+00 166

N

0 20 40 60

SCALE IN FEET

MODEL: Default
FILE NAME: P:\2018\18078B4 CADD - DWG\4.7 Tran\CADD Sheets\Federal\18078BA-Int-ROW-07.dgn

TWM ENGINEERING & GEOSPATIAL SERVICES	TWM, INC. WWW.TWM-INC.COM IL DESIGN FIRM LICENSE NO: 184-001220	USER NAME = efisher	DESIGNED - EKF	REVISED -	ST. CLAIR COUNTY DEPARTMENT OF ROADS AND BRIDGES
			DRAWN - EKF/KDD	REVISED -	
		PLOT SCALE = 40.0000 ' / in.	CHECKED - JWS	REVISED -	
		PLOT DATE = 6/24/2025	DATE - 06/2025	REVISED -	

ROW PLAN

SCALE: 1"=20' | SHEET 7 OF 7 SHEETS | STA. 160+00.00 TO STA. 161+94.28

F.A.U. RTE.	SECTION	COUNTY	TOTAL SHEETS	SHEET NO.
9330	24-00301-26-PW	ST. CLAIR	191	103
		CONTRACT NO. 97872		
		ILLINOIS	FED. AID PROJECT	

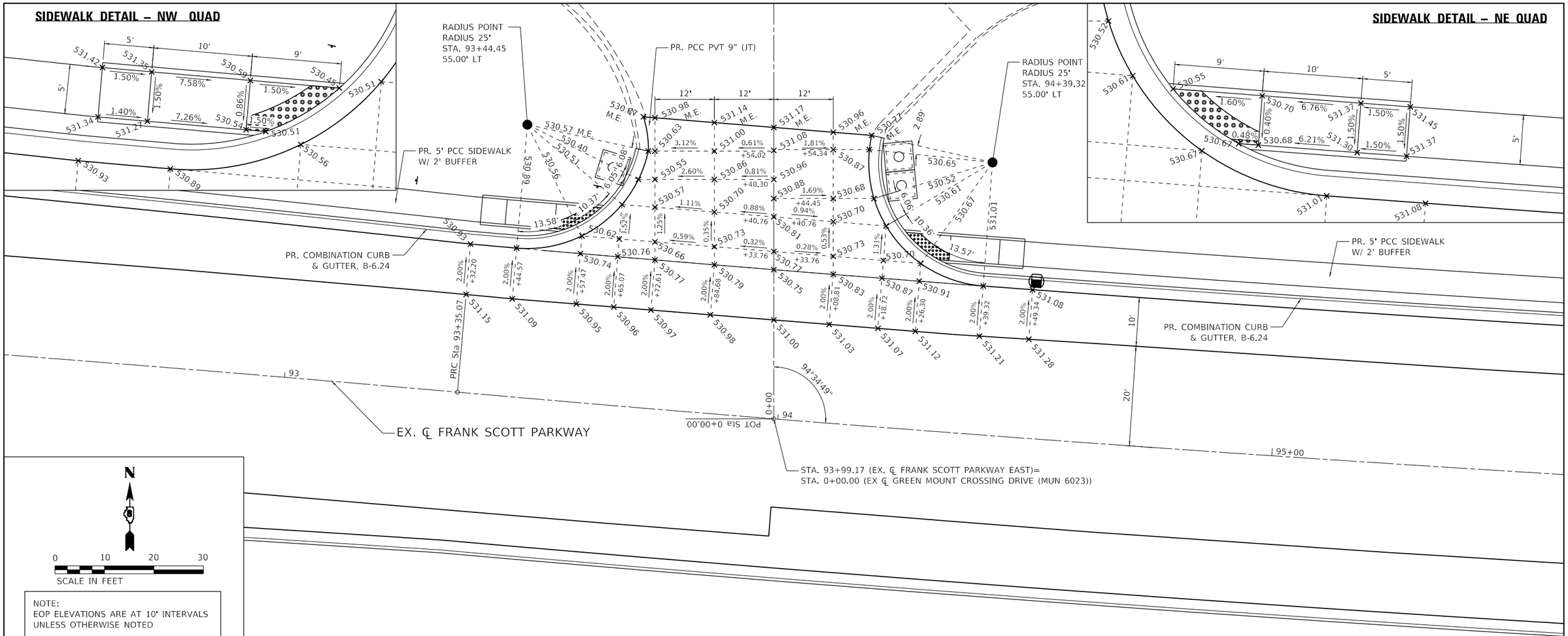

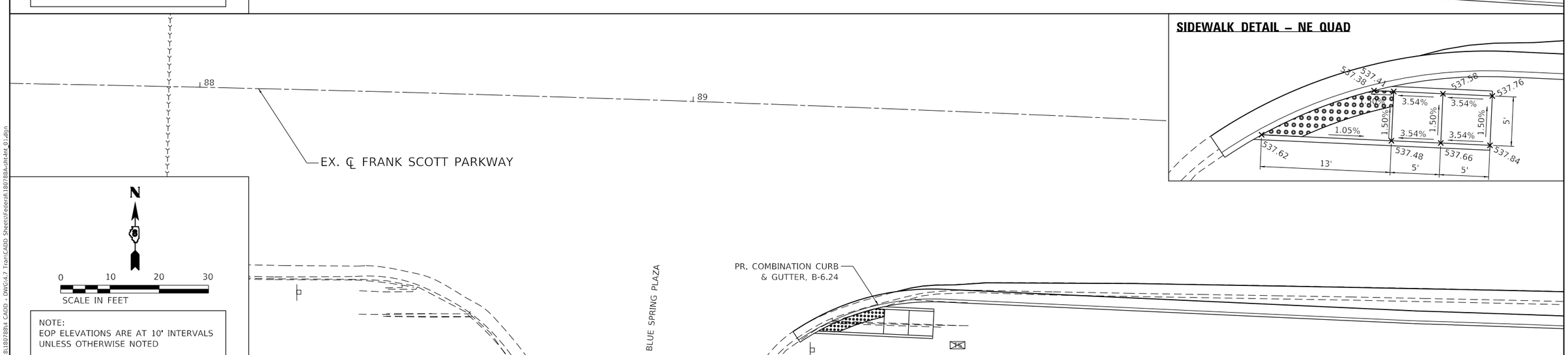

MODEL: Default
FILE NAME: P:\2018\180788\4 CADD - DWG\4.7 Tran\CADD Sheets\Federal\180788A-sht-Int_01.dgn

TWM ENGINEERING & GEOSPATIAL SERVICES	TWM, INC. WWW.TWM-INC.COM IL DESIGN FIRM LICENSE NO: 184-001220	USER NAME = efisher	DESIGNED - EKF	REVISED -	ST. CLAIR COUNTY DEPARTMENT OF ROADS AND BRIDGES
			DRAWN - EKF/KDD	REVISED -	
		PLOT SCALE = 20.0000 ' / in.	CHECKED - JWS	REVISED -	
		PLOT DATE = 6/17/2025	DATE - 06/2025	REVISED -	

INTERSECTION DETAILS
GREEN MOUNT CROSSING DRIVE

SCALE: 1"=10' | SHEET 1 OF 3 SHEETS | STA. TO STA.

F.A.U. RTE.	SECTION	COUNTY	TOTAL SHEETS	SHEET NO.
9330	24-00301-26-PW	ST. CLAIR	191	104
		CONTRACT NO. 97872		
		ILLINOIS	FED. AID PROJECT	

SIDEWALK DETAIL – NW QUAD

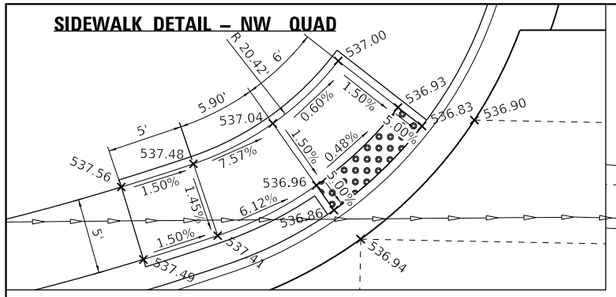

SIDEWALK DETAIL – NE QUAD

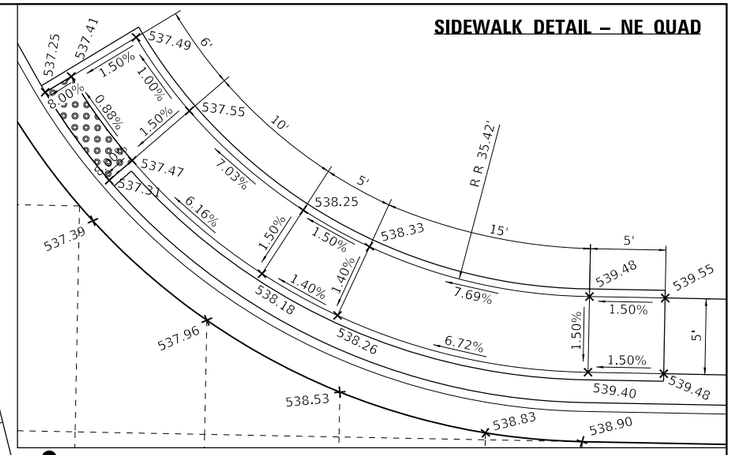

RADIUS POINT
STA. 100+96.95
128.93' LT

RADIUS POINT
STA. 98+25.35
205.00' LT

RADIUS POINT
RADIUS 30'
STA. 98+76.08
68.85' LT

PR. PCC PVT 9" (JT)

RADIUS POINT
RADIUS 45'
STA. 100+06.86
75.00' LT

PR. 5' PCC SIDEWALK
W/ 2' BUFFER

PR. COMBINATION CURB
& GUTTER, B-6.24

PR. 5' PCC SIDEWALK
W/ 2' BUFFER

PR. COMBINATION CURB
& GUTTER, B-6.24

EX. ℄ FRANK SCOTT PARKWAY

STA. 99+35.43 (EX. ℄ FRANK SCOTT PARKWAY EAST)=
STA. 10+00.00 (EX. ℄ GREEN MOUNT CROSSING DRIVE (MUN 6024))

PT Sta 98+96.93

POT Sta 10+00.00

91°6'46"

N

0 10 20 30

SCALE IN FEET

NOTE:
EOP ELEVATIONS ARE AT 10' INTERVALS
UNLESS OTHERWISE NOTED

MODEL: Default
FILE NAME: P:\2018\18078B4 CADD - DWG\4.7 Tran\CADD Sheets\Federal\18078BA-alt-int_02.dgn

TWM ENGINEERING & GEOSPATIAL SERVICES — TWM, INC. WWW.TWM-INC.COM — IL DESIGN FIRM LICENSE NO: 184-001220	USER NAME = efisher	DESIGNED - EKF	REVISED -	ST. CLAIR COUNTY DEPARTMENT OF ROADS AND BRIDGES	INTERSECTION DETAILS GREEN MOUNT CROSSING DRIVE
		DRAWN - EKF/KDD	REVISED -		
	PLOT SCALE = 20.0000 ' / in.	CHECKED - JWS	REVISED -		SCALE: 1"=10' SHEET 2 OF 3 SHEETS STA. TO STA.
	PLOT DATE = 6/17/2025	DATE - 06/2025	REVISED -		

F.A.U. RTE.	SECTION	COUNTY	TOTAL SHEETS	SHEET NO.
9330	24-00301-26-PW	ST. CLAIR	191	105
		CONTRACT NO. 97872		
	ILLINOIS FED. AID PROJECT			

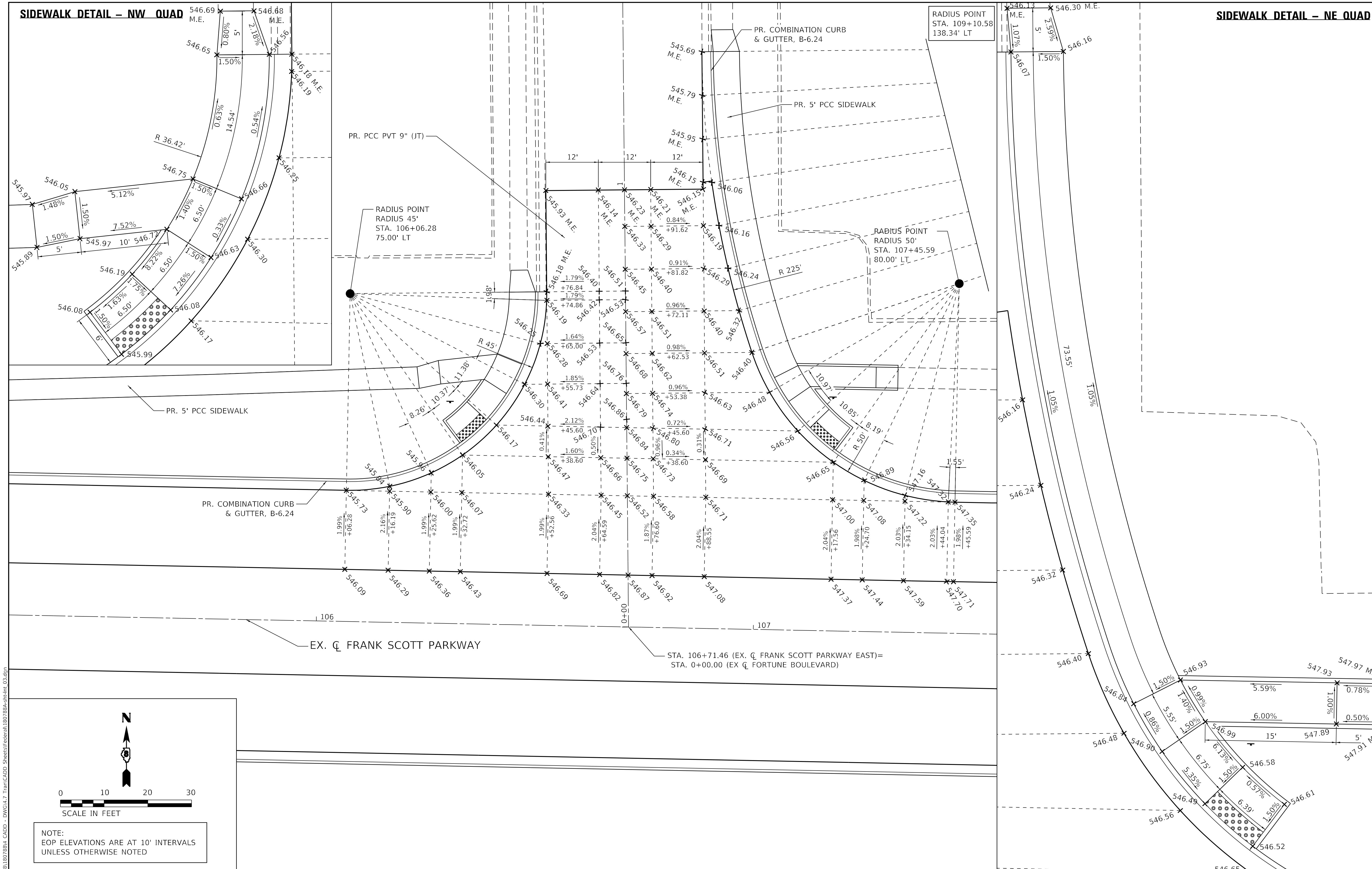

MODEL: Default
FILE NAME: P:\2018\180788\4 CADD - DWG\4.7 Tran\CADD Sheets\Federal\180788A-sht-int_03.dgn

TWM, INC. WWW.TWM-INC.COM IL DESIGN FIRM LICENSE NO: 184-001220	USER NAME = efisher	DESIGNED - EKF	REVISED -
		DRAWN - EKF/KDD	REVISED -
	PLOT SCALE = 20.0000 ' / in.	CHECKED - JWS	REVISED -
	PLOT DATE = 6/17/2025	DATE - 06/2025	REVISED -

ST. CLAIR COUNTY DEPARTMENT OF ROADS AND BRIDGES

INTERSECTION DETAILS
FORTUNE BOULEVARD

SCALE: 1"=10' | SHEET 3 OF 3 SHEETS | STA. | TO STA.

F.A.U. RTE.	SECTION	COUNTY	TOTAL SHEETS	SHEET NO.
9330	24-00301-26-PW	ST. CLAIR	191	106
		CONTRACT NO. 97872		

ILLINOIS | FED. AID PROJECT

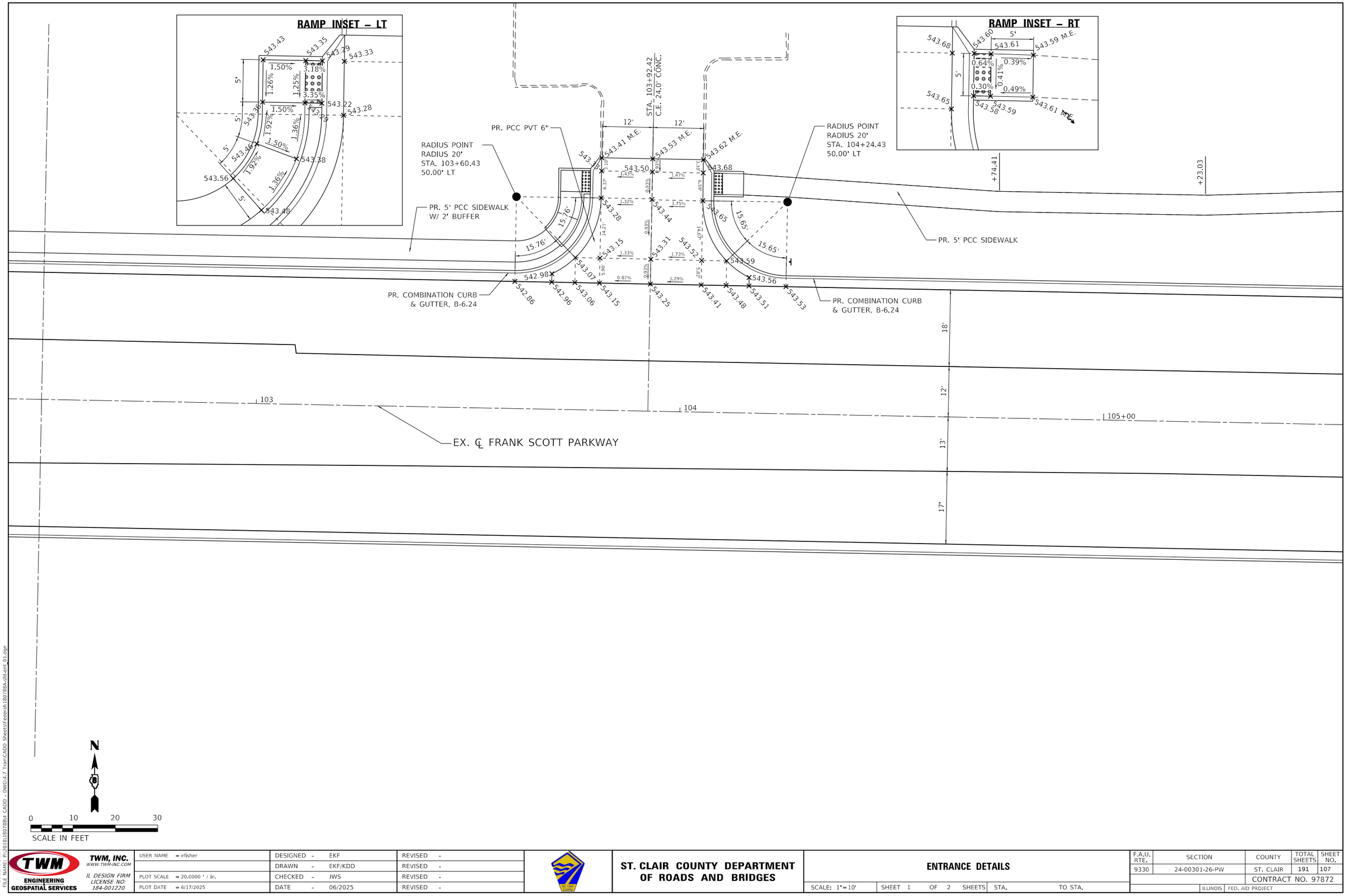

MODEL: Default
FILE NAME: P:\2018\18078\4 CADD - DWG\4.7 Train\CADD Sheets\Federal\180788A-sht-ent_01.dgn

TWM ENGINEERING & GEOSPATIAL SERVICES	TWM, INC. WWW.TWM-INC.COM IL DESIGN FIRM LICENSE NO: 184-001220	USER NAME = efisher	DESIGNED - EKF	REVISED -	ST. CLAIR COUNTY DEPARTMENT OF ROADS AND BRIDGES
			DRAWN - EKF/KDD	REVISED -	
		PLOT SCALE = 20.0000 ' / in.	CHECKED - JWS	REVISED -	
		PLOT DATE = 6/17/2025	DATE - 06/2025	REVISED -	

ENTRANCE DETAILS

SCALE: 1"=10' | SHEET 1 OF 2 SHEETS | STA. | TO STA.

F.A.U. RTE.	SECTION	COUNTY	TOTAL SHEETS	SHEET NO.
9330	24-00301-26-PW	ST. CLAIR	191	107
		CONTRACT NO. 97872		
	ILLINOIS	FED. AID PROJECT		

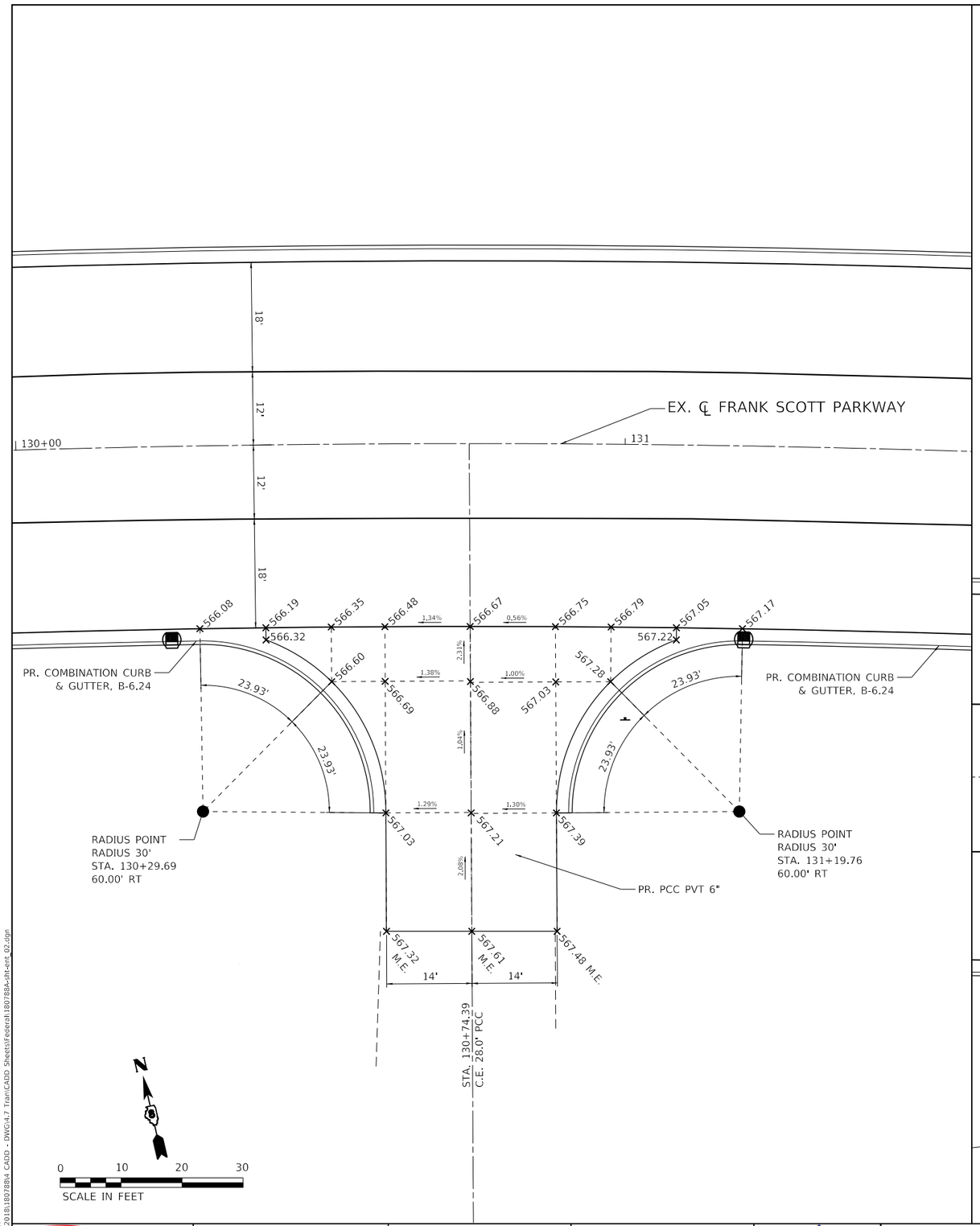

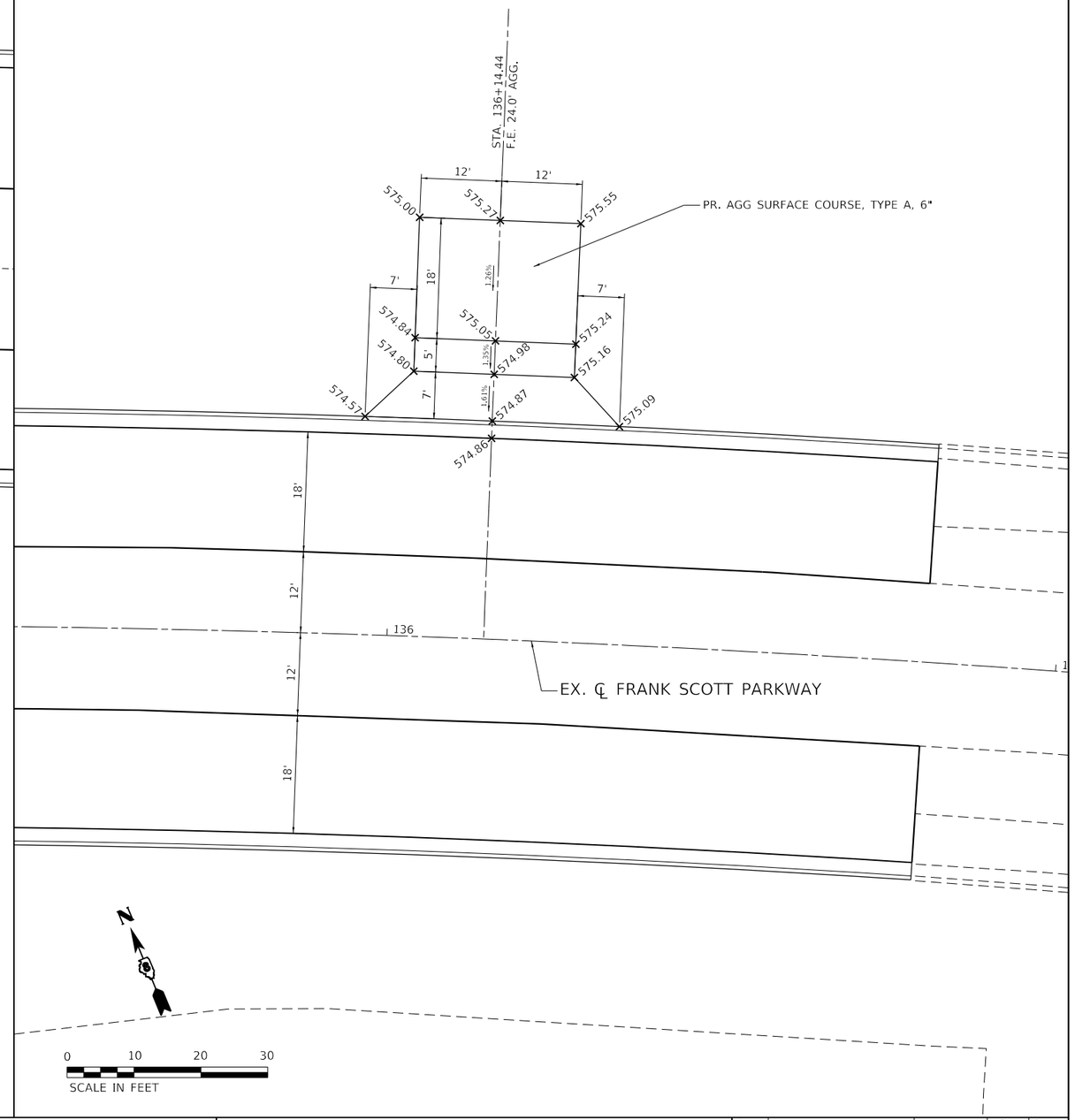

MODEL: Default
FILE NAME: P:\2018\189288\4 CADD - DWG\4.7 Train\CADD Sheets\Federal\189288A-sht-ent_02.dgn

TWM ENGINEERING & GEOSPATIAL SERVICES	TWM, INC. WWW.TWM-INC.COM IL DESIGN FIRM LICENSE NO: 184-001220	USER NAME = efisher	DESIGNED - EKF	REVISED -	ST. CLAIR COUNTY DEPARTMENT OF ROADS AND BRIDGES
			DRAWN - EKF/KDD	REVISED -	
		PLOT SCALE = 20.0000 ' / in.	CHECKED - JWS	REVISED -	
		PLOT DATE = 6/17/2025	DATE - 06/2025	REVISED -	

ENTRANCE DETAILS

SCALE: 1"=10' | SHEET 2 OF 2 SHEETS | STA. | TO STA.

F.A.U. RTE.	SECTION	COUNTY	TOTAL SHEETS	SHEET NO.
9330	24-00301-26-PW	ST. CLAIR	191	108
		CONTRACT NO. 97872		
	ILLINOIS FED. AID PROJECT			

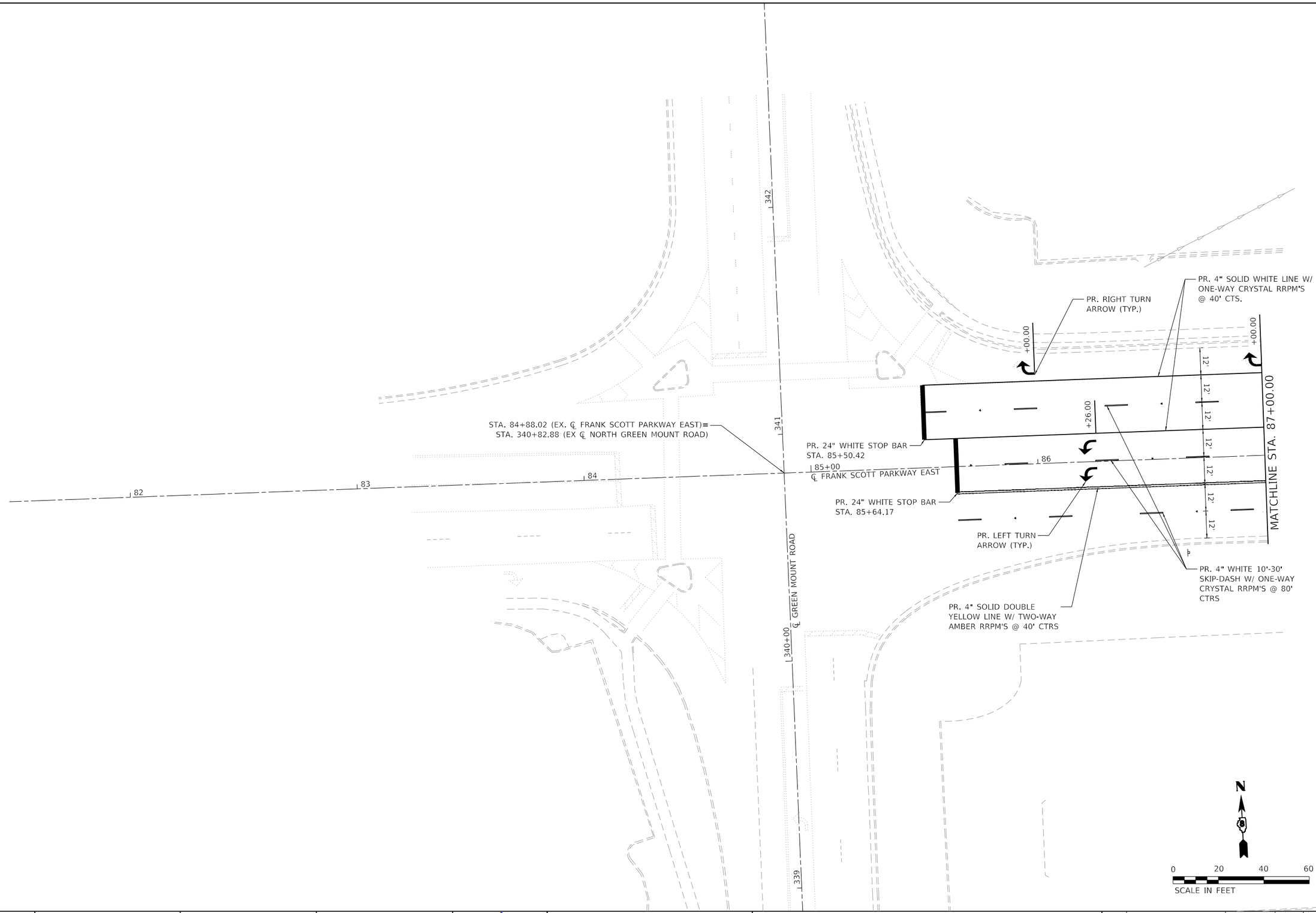

MODEL: Default
FILE NAME: P:\2018\180788\4 CADD - DWG\4.7 Tran\CADD Sheets\Federal\180788A-sht-pmk-01.dgn

TWM ENGINEERING & GEOSPATIAL SERVICES	TWM, INC. WWW.TWM-INC.COM IL DESIGN FIRM LICENSE NO: 184-001220	USER NAME = efisher	DESIGNED - EKF	REVISED -	ST. CLAIR COUNTY DEPARTMENT OF ROADS AND BRIDGES
			DRAWN - EKF/KDD	REVISED -	
		PLOT SCALE = 40.0000 ' / in.	CHECKED - JWS	REVISED -	
		PLOT DATE = 6/17/2025	DATE - 06/2025	REVISED -	

PAVEMENT MARKING SHEET

SCALE: 1"=20' | SHEET 1 OF 9 SHEETS | STA. 85+00.00 TO STA. 87+00.00

F.A.U. RTE.	SECTION	COUNTY	TOTAL SHEETS	SHEET NO.
9330	24-00301-26-PW	ST. CLAIR	191	109
		CONTRACT NO. 97872		
		ILLINOIS	FED. AID PROJECT	

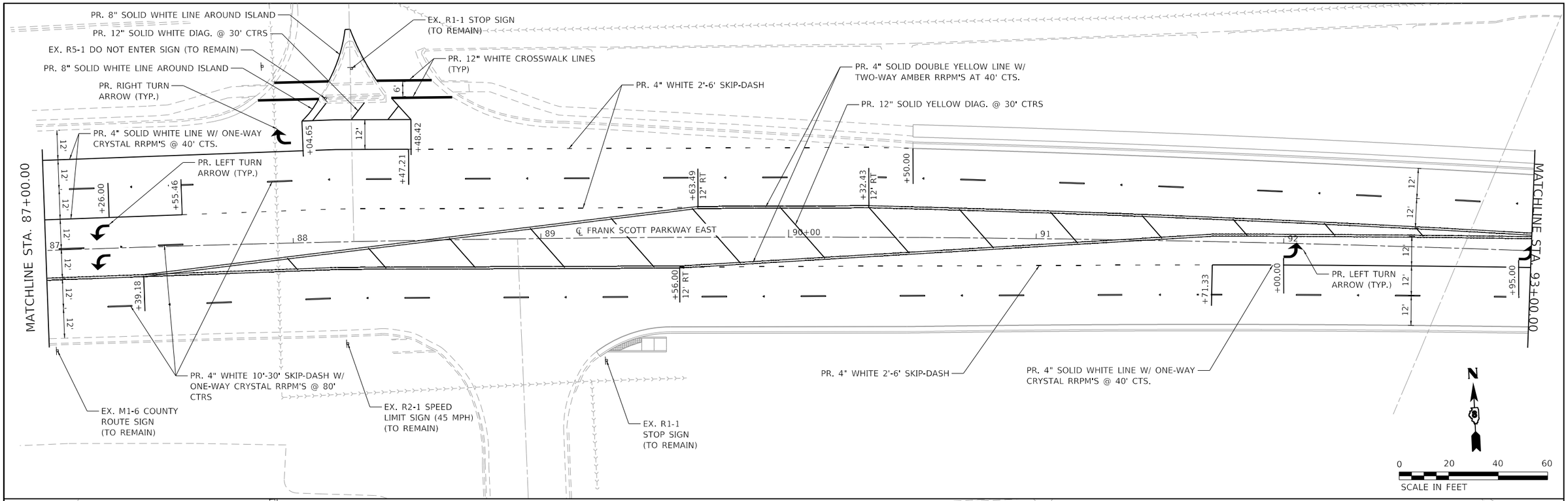

MODEL: Default
FILE NAME: P:\2018\180788\4 CADD - DWG\4.7 Tran\CADD Sheets\Federal\180788A-sht-pmk-02.dgn

TWM ENGINEERING & GEOSPATIAL SERVICES	TWM, INC. WWW.TWM-INC.COM IL DESIGN FIRM LICENSE NO: 184-001220	USER NAME = efisher	DESIGNED - EKF	REVISED -	ST. CLAIR COUNTY DEPARTMENT OF ROADS AND BRIDGES
			DRAWN - EKF/KDD	REVISED -	
		PLOT SCALE = 40.0000 ' / in.	CHECKED - JWS	REVISED -	
		PLOT DATE = 6/17/2025	DATE - 06/2025	REVISED -	

PAVEMENT MARKING SHEET

SCALE: 1"=20' | SHEET 2 OF 9 SHEETS | STA. 87+00.00 TO STA. 99+00.00

F.A.U. RTE.	SECTION	COUNTY	TOTAL SHEETS	SHEET NO.
9330	24-00301-26-PW	ST. CLAIR	191	110
		CONTRACT NO. 97872		
		ILLINOIS	FED. AID PROJECT	

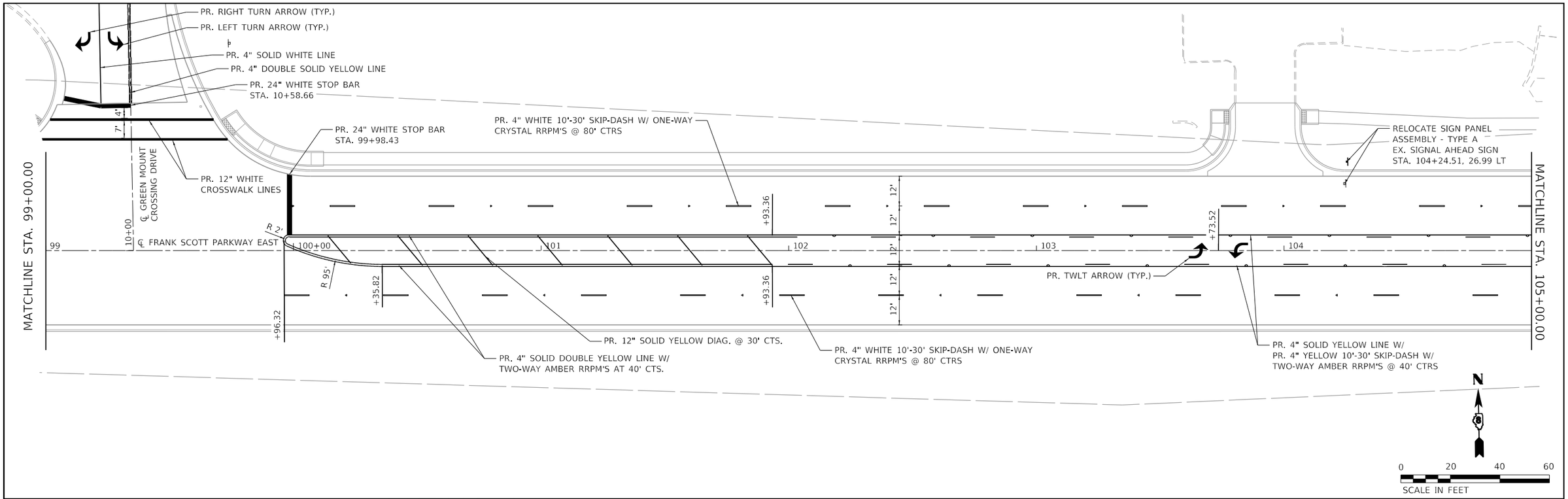

MODEL: Default
FILE NAME: P:\2018\18078\04 CADD - DWG\4.7 Tran\CADD Sheets\Federal\18078A-sht-pmk-03.dgn

TWM ENGINEERING & GEOSPATIAL SERVICES
TWM, INC.
WWW.TWM-INC.COM
IL DESIGN FIRM LICENSE NO: 184-001220

USER NAME = efisher	DESIGNED - EKF	REVISED -	
	DRAWN - EKF/KDD	REVISED -	
PLOT SCALE = 40.0000 ' / in.	CHECKED - JWS	REVISED -	
PLOT DATE = 6/17/2025	DATE - 06/2025	REVISED -	

ST. CLAIR COUNTY DEPARTMENT OF ROADS AND BRIDGES

PAVEMENT MARKING SHEET

SCALE: 1"=20' | SHEET 3 OF 9 SHEETS | STA. 99+00.00 TO STA. 111+00.00

F.A.U. RTE.	SECTION	COUNTY	TOTAL SHEETS	SHEET NO.
9330	24-00301-26-PW	ST. CLAIR	191	111
		CONTRACT NO. 97872		
		ILLINOIS	FED. AID PROJECT	

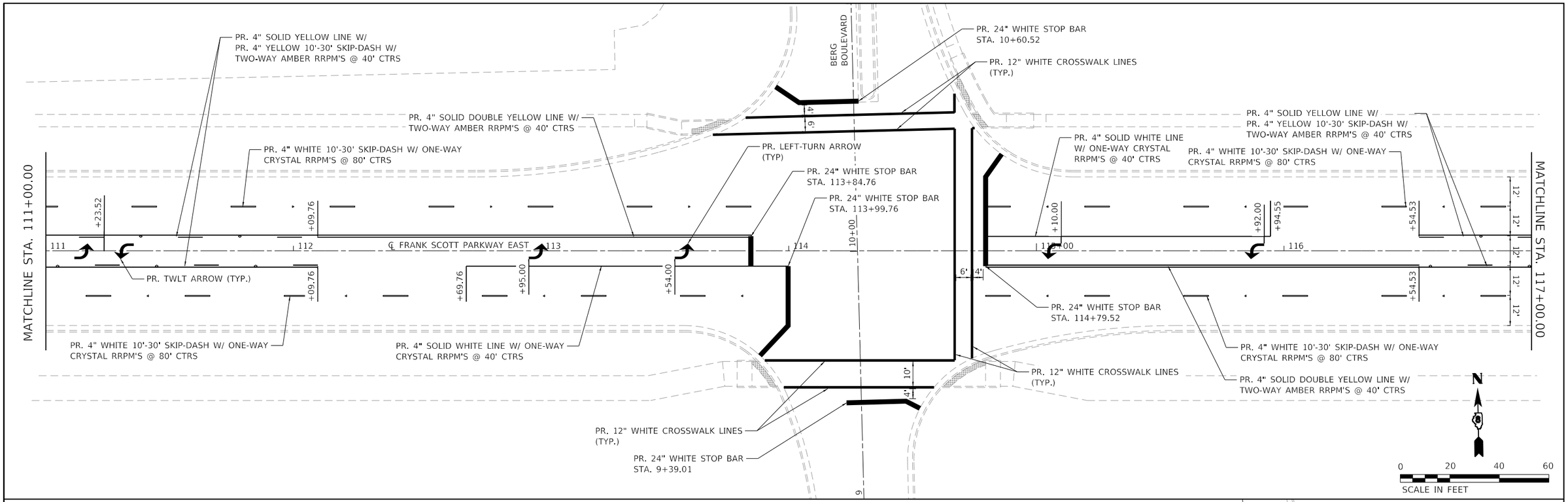

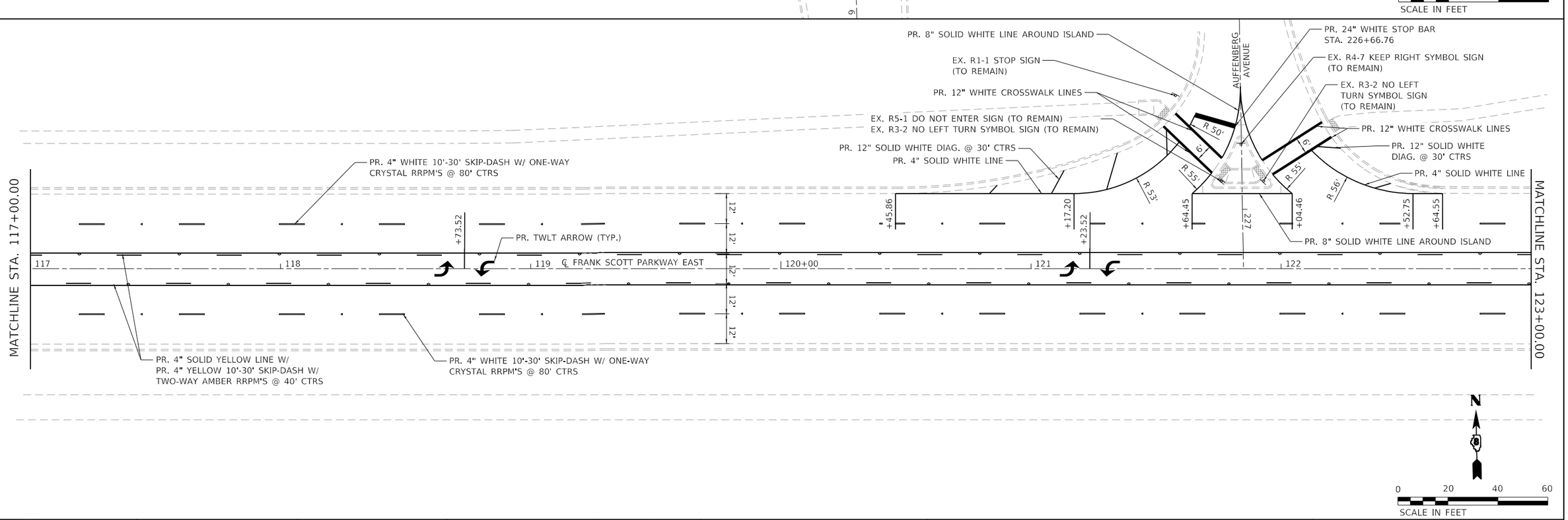

MODEL: Default
FILE NAME: P:\2018\180788\4_CADD - DWG\4.7 Tran\CADD Sheets\Federal\180788A-pht-pmk-04.dgn

TWM ENGINEERING GEOSPATIAL SERVICES	TWM, INC. WWW.TWM-INC.COM IL DESIGN FIRM LICENSE NO: 184-001220	USER NAME = efisher	DESIGNED - EKF	REVISED -	ST. CLAIR COUNTY DEPARTMENT OF ROADS AND BRIDGES	PAVEMENT MARKING SHEET	F.A.U. RTE. 9330 / SECTION 24-00301-26-PW / COUNTY ST. CLAIR / TOTAL SHEETS 191 / SHEET NO. 112
			DRAWN - EKF/KDD	REVISED -			CONTRACT NO. 97872
		PLOT SCALE = 40.0000 ' / in.	CHECKED - JWS	REVISED -		SCALE: 1"=20' / SHEET 4 OF 9 SHEETS / STA. 111+00.00 TO STA. 123+00.00	ILLINOIS / FED. AID PROJECT
		PLOT DATE = 6/17/2025	DATE - 06/2025	REVISED -			

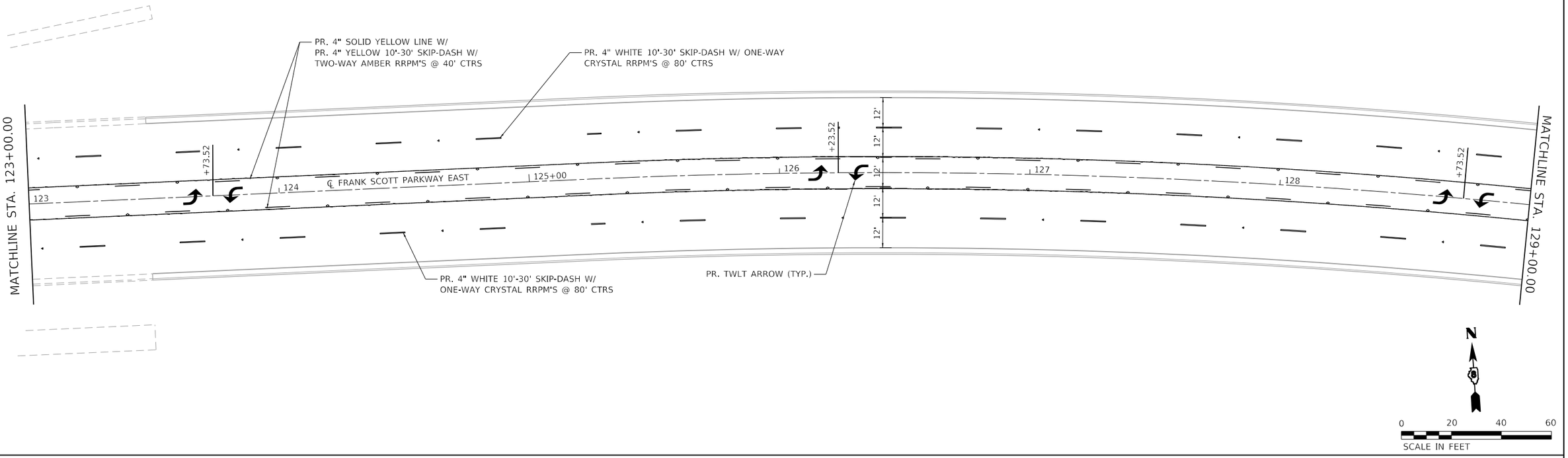

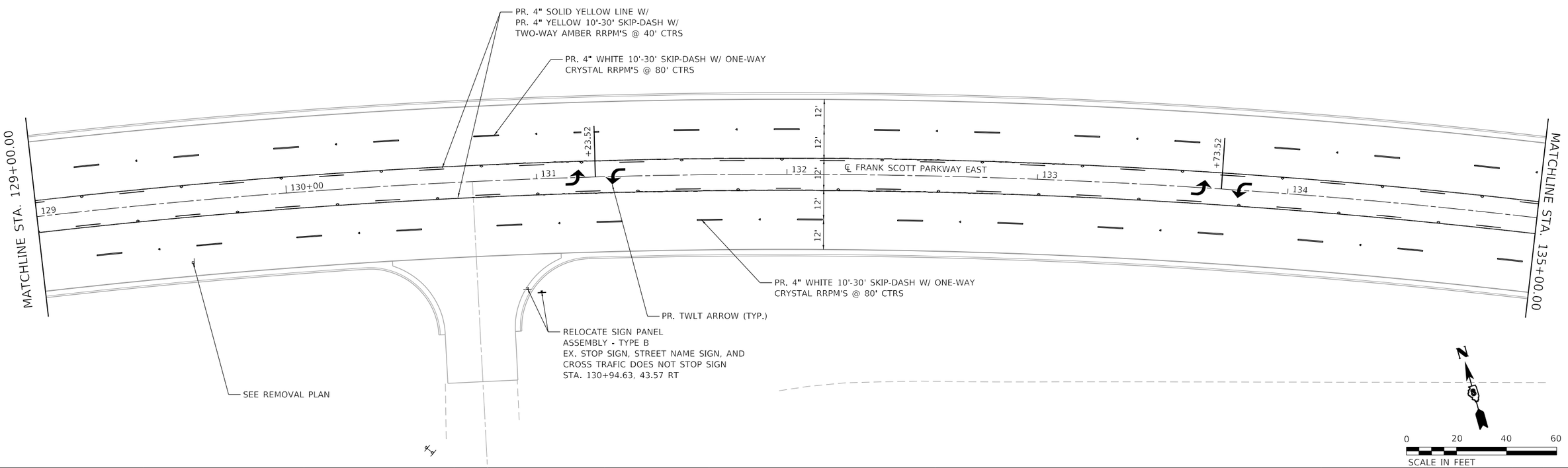

MODEL: Default
FILE NAME: P:\2018\180788\4 CADD - DWG\4.7 Tran\CADD Sheets\Federal\180788A-sht-pmk-05.dgn

TWM ENGINEERING & GEOSPATIAL SERVICES	TWM, INC. WWW.TWM-INC.COM IL DESIGN FIRM LICENSE NO: 184-001220	USER NAME = efisher	DESIGNED - EKF	REVISED -	ST. CLAIR COUNTY DEPARTMENT OF ROADS AND BRIDGES
			DRAWN - EKF/KDD	REVISED -	
		PLOT SCALE = 40.0000 ' / in.	CHECKED - JWS	REVISED -	
		PLOT DATE = 6/17/2025	DATE - 06/2025	REVISED -	

PAVEMENT MARKING SHEET

SCALE: 1"=20' | SHEET 5 OF 9 SHEETS | STA. 123+00.00 TO STA. 135+00.00

F.A.U. RTE.	SECTION	COUNTY	TOTAL SHEETS	SHEET NO.
9330	24-00301-26-PW	ST. CLAIR	191	113
		CONTRACT NO. 97872		
		ILLINOIS	FED. AID PROJECT	

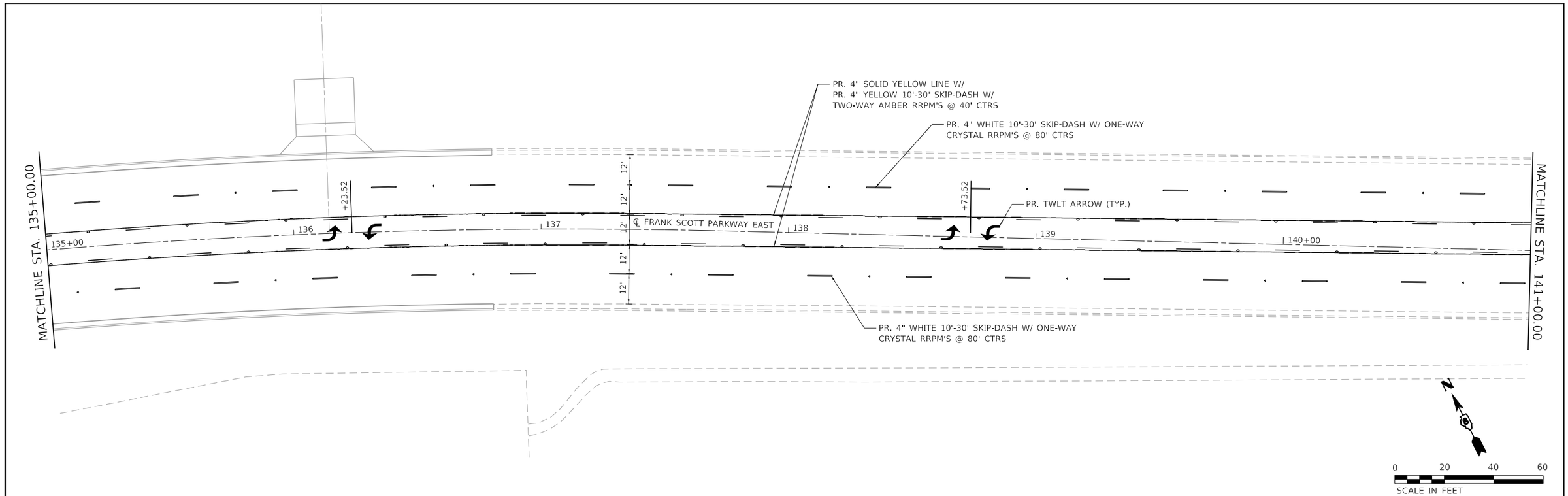

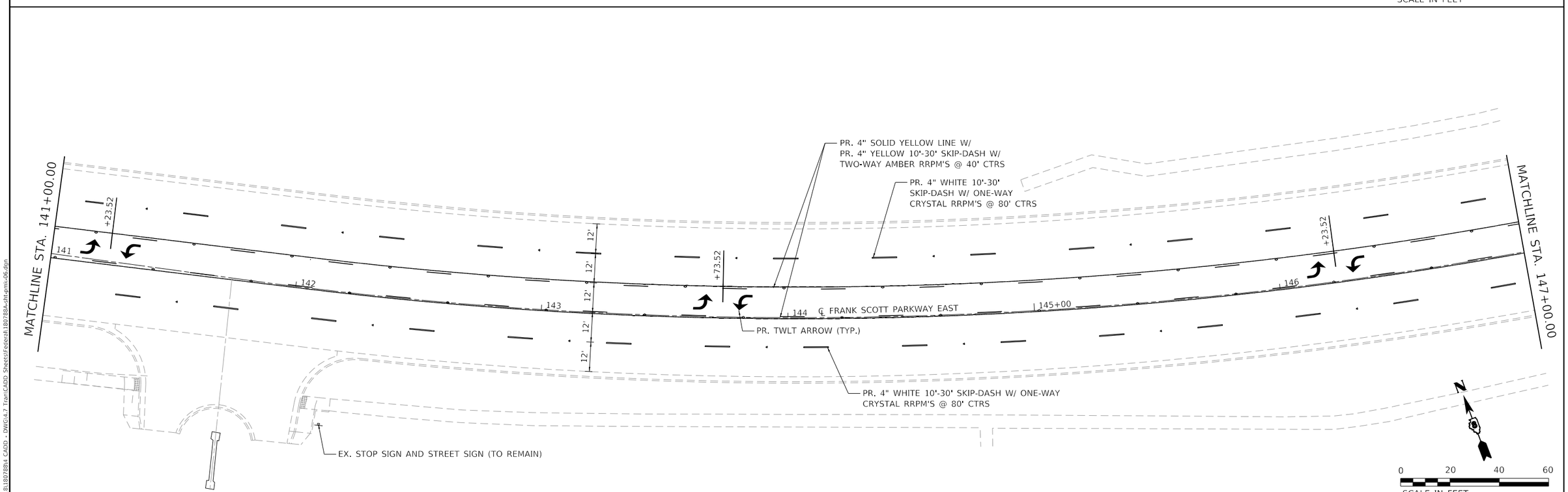

MODEL: Default
FILE NAME: P:\2018\180788\4 CADD - DWG\4.7 Tran\CADD Sheets\Federal\180788A-sht-pmk-06.dgn

TWM ENGINEERING & GEOSPATIAL SERVICES	TWM, INC. WWW.TWM-INC.COM IL DESIGN FIRM LICENSE NO: 184-001220	USER NAME = efisher	DESIGNED - EKF	REVISED -	ST. CLAIR COUNTY DEPARTMENT OF ROADS AND BRIDGES
			DRAWN - EKF/KDD	REVISED -	
		PLOT SCALE = 40.0000 ' / in.	CHECKED - JWS	REVISED -	
		PLOT DATE = 6/17/2025	DATE - 06/2025	REVISED -	

PAVEMENT MARKING SHEET

SCALE: 1"=20' | SHEET 6 OF 9 SHEETS | STA. 135+00.00 TO STA. 147+00.00

F.A.U. RTE.	SECTION	COUNTY	TOTAL SHEETS	SHEET NO.
9330	24-00301-26-PW	ST. CLAIR	191	114
		CONTRACT NO. 97872		
		ILLINOIS	FED. AID PROJECT	

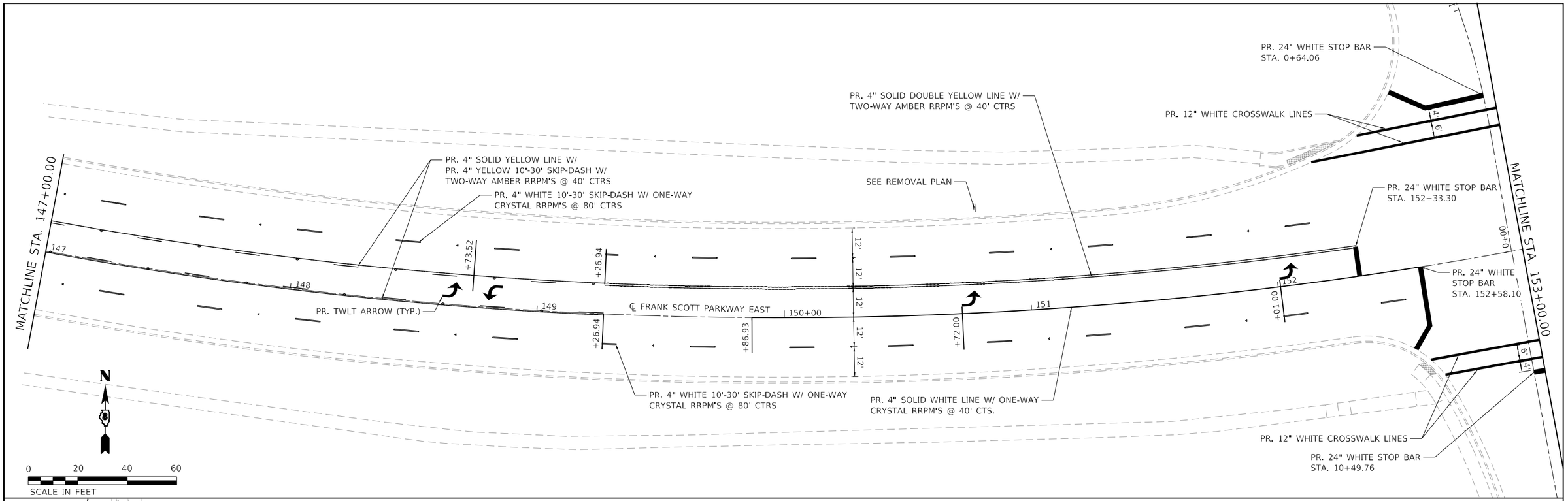

MODEL: Default
FILE NAME: P:\2018\18078B4 CADD - DWG\4.7 Train\CADD Sheets\Federal\18078BA-sht-pmk-07.dgn

TWM ENGINEERING & GEOSPATIAL SERVICES	TWM, INC. WWW.TWM-INC.COM IL DESIGN FIRM LICENSE NO: 184-001220	USER NAME = efisher	DESIGNED - EKF	REVISED -	ST. CLAIR COUNTY DEPARTMENT OF ROADS AND BRIDGES
			DRAWN - EKF/KDD	REVISED -	
		PLOT SCALE = 40.0000 ' / in.	CHECKED - JWS	REVISED -	
		PLOT DATE = 6/17/2025	DATE - 06/2025	REVISED -	

PAVEMENT MARKING SHEET

SCALE: 1"=20' | SHEET 7 OF 9 SHEETS | STA. 147+00.00 TO STA. 159+00.00

F.A.U. RTE.	SECTION	COUNTY	TOTAL SHEETS	SHEET NO.
9330	24-00301-26-PW	ST. CLAIR	191	115
		CONTRACT NO. 97872		
	ILLINOIS	FED. AID PROJECT		

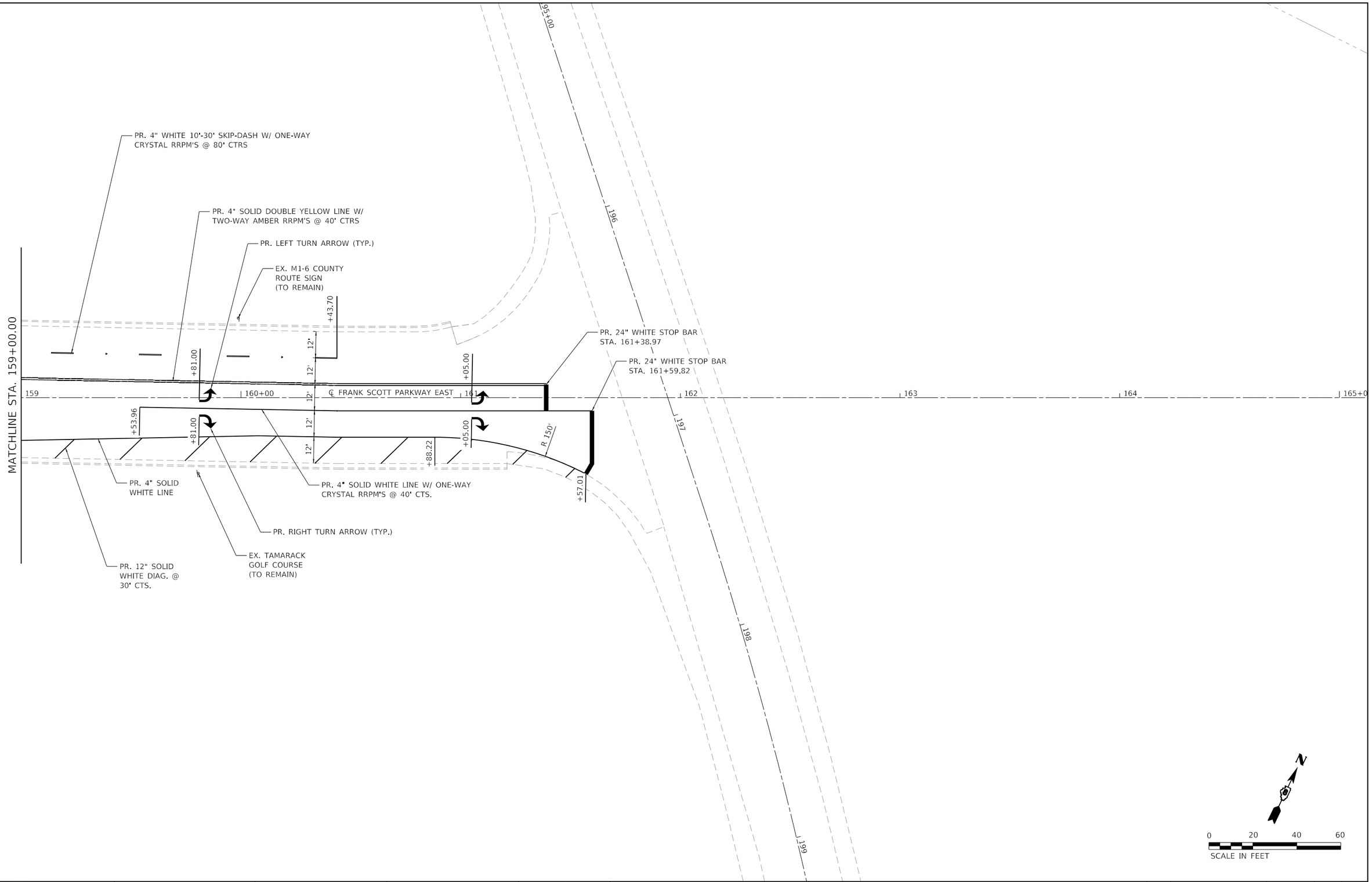

MODEL: Default
FILE NAME: P:\2018\18078\4 CADD - DWG\4.7 TranCADD Sheets\Federal\180788A-sht-pmk-08.dgn

TWM ENGINEERING & GEOSPATIAL SERVICES	TWM, INC. WWW.TWM-INC.COM IL DESIGN FIRM LICENSE NO: 184-001220	USER NAME = efisher	DESIGNED - EKF	REVISED -	ST. CLAIR COUNTY DEPARTMENT OF ROADS AND BRIDGES
			DRAWN - EKF/KDD	REVISED -	
		PLOT SCALE = 40.0000 ' / in.	CHECKED - JWS	REVISED -	
		PLOT DATE = 6/17/2025	DATE - 06/2025	REVISED -	

PAVEMENT MARKING SHEET

SCALE: 1"=20' | SHEET 8 OF 9 SHEETS | STA. 159+00.00 TO STA. 161+94.28

F.A.U. RTE.	SECTION	COUNTY	TOTAL SHEETS	SHEET NO.
9330	24-00301-26-PW	ST. CLAIR	191	116
		CONTRACT NO. 97872		
	ILLINOIS	FED. AID PROJECT		

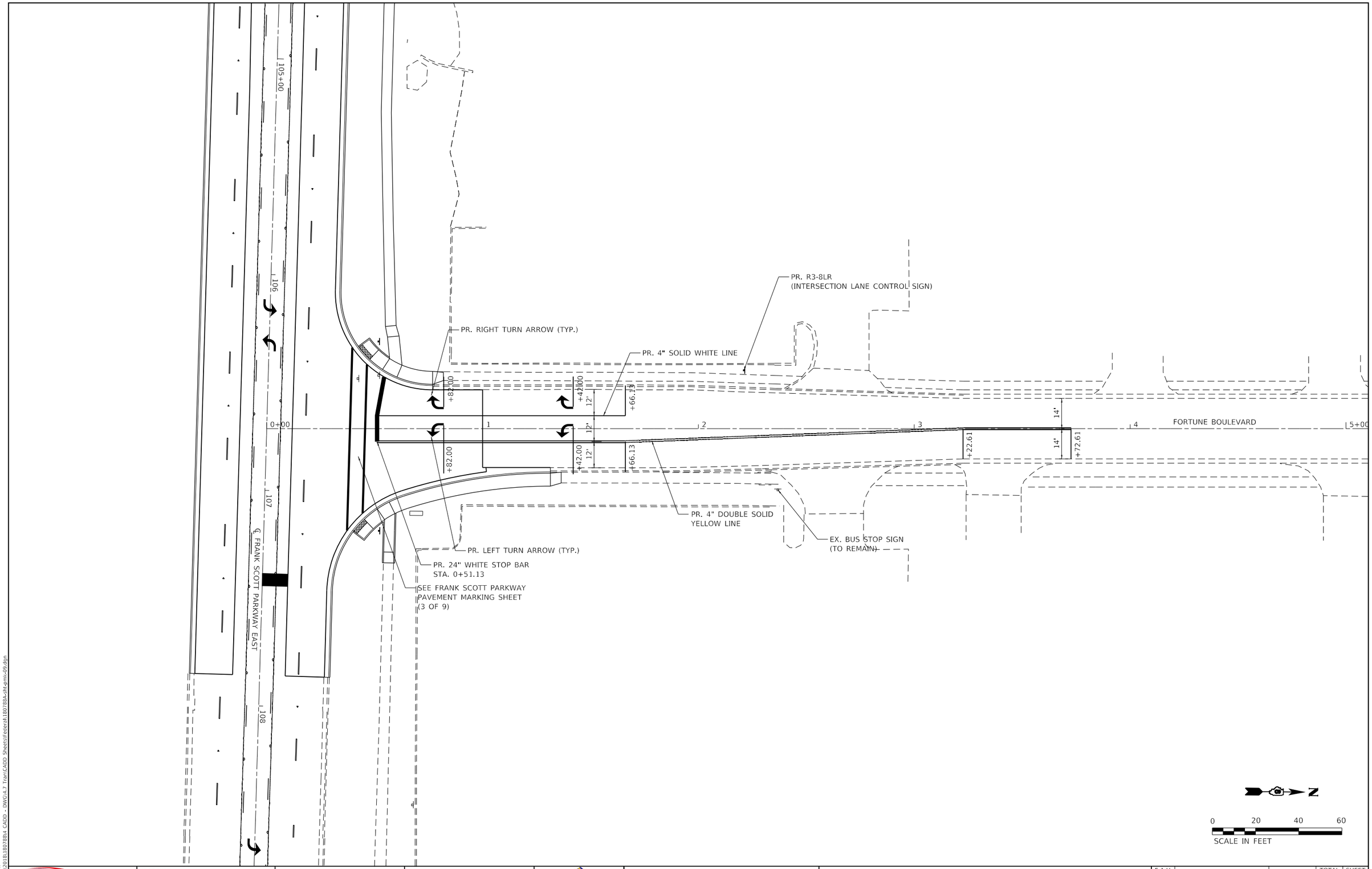

MODEL: Default
FILE NAME: P:\2018\180788\4 CADD - DWG\4.7 Tran\CADD Sheets\Federal\180788A-ith-gmki-09.dgn

TWM ENGINEERING GEOSPATIAL SERVICES	TWM, INC. WWW.TWM-INC.COM	USER NAME = efisher	DESIGNED - EKF	REVISED -	ST. CLAIR COUNTY DEPARTMENT OF ROADS AND BRIDGES
	IL DESIGN FIRM LICENSE NO: 184-001220		DRAWN - EKF/KDD	REVISED -	
		PLOT SCALE = 40.0000 ' / in.	CHECKED - JWS	REVISED -	
		PLOT DATE = 6/17/2025	DATE - 06/2025	REVISED -	

PAVEMENT MARKING SHEET
FORTUNE BLVD.

SCALE: 1"=20' | SHEET 9 OF 9 SHEETS | STA. 0+00.00 TO STA. 3+72.61

F.A.U. RTE.	SECTION	COUNTY	TOTAL SHEETS	SHEET NO.
9330	24-00301-26-PW	ST. CLAIR	191	117
		CONTRACT NO. 97872		
	ILLINOIS	FED. AID PROJECT		

GENERAL NOTES:

1. TRAFFIC SIGNALS SHALL BE OPERATIONAL AND ALL TRAFFIC SIGNAL WORK SHALL BE COMPLETED DURING THE FRANK SCOTT PARKWAY IMPROVEMENTS.

2. LOCATE UNDERGROUND CABLES PRIOR TO ATTEMPTING TO CONSTRUCT THIS PROJECT.

3. ALL VEHICLE SIGNAL HEADS SHALL BE POLYCARBONATE AND SHALL HAVE 12" L.E.D. SECTIONS. ALL MOUNTING HARDWARE SHALL BE ALUMINUM. ALL BOLTS, SCREWS, NUTS, AND WASHERS SHALL BE STAINLESS STEEL. ANTI-SIEZE PASTE COMPOUND SHALL BE USED ON ALL MOUNTING HARDWARE FIELD CONNECTIONS.

4. ALL MAST ARM MOUNTED SIGNAL HEADS SHALL HAVE BACKPLATES. BACKPLATES SHALL BE PLASTIC.

5. THE LOCATION OF THE MAST ARM SUPPORTS SHALL BE APPROVED BY THE ST. CLAIR COUNTY DEPARTMENT OF ROADS AND BRIDGES BEFORE FOUNDATIONS ARE CONSTRUCTED. MAST ARM POLES SHALL BE LOCATED A MINIMUM OF 10 FEET FROM THE EDGE OF PAVEMENT OR 2 FEET FROM THE EDGE OF SHOULDER, WHICHEVER DISTANCE IS GREATER. IN CURBED SECTIONS, THE MAST ARM POLES SHALL BE LOCATED A MINIMUM OF 5 FEET FROM THE FACE OF THE CURB. THESE DISTANCES ARE TO THE NEAR FACE OF THE MAST ARM. IN CURBED SECTIONS, THE TRAFFIC SIGNAL POST CENTERS SHALL BE LOCATED A MINIMUM OF 4 FEET FROM THE BACK OF CURB.

6. ALL TRAFFIC SIGNAL CABLES SHALL BE #14 AWG STRANDED COPPER UNLESS OTHERWISE SPECIFIED. TERMINAL ENDS SHALL HAVE CRIMPED-ON FORK TONGUE CONNECTORS.

7. THE LOCATION OF ALL DETECTOR LOOPS SHALL BE APPROVED BY THE ST. CLAIR COUNTY DEPARTMENT OF ROADS AND BRIDGES BEFORE ANY SLOTS ARE SAWED IN THE PAVEMENT.

8. DETECTOR LOOP LEAD-IN SPLICES SHALL BE MADE IN A HANDHOLE PER ARTICLE 873.03 OF THE STANDARD SPECIFICATIONS FOR ROAD AND BRIDGE CONSTRUCTION AND STANDARD DRAWING 886001. CONDUCTORS SHALL BE SPLICED IN A RIGID MOLD. ROSIN-CORE SOLDER SHALL BE USED.

9. CALL DELAY SHALL NOT FUNCTION WHEN THE RELATED PHASES ARE IN THE GREEN MODE.

10. ALL HANDHOLES SHALL BE CAST-IN-PLACE PORTLAND CEMENT CONCRETE (PER ARTICLE 814.03(A)). THE CAST-IN-PLACE LEGEND ON THE COVER SHALL BE "TRAFFIC SIGNALS". SLOPE HANDHOLE COVERS TO MATCH PROPOSED GRADE ELEVATIONS.

11. ALL INDUCTIVE LOOP DETECTORS SUPPLIED FOR THIS PROJECT SHALL HAVE THE CAPACITY OF OPERATING WITH BOTH DELAY AND EXTENSION MODES ACTIVE. IF A TIME SETTING IS PROGRAMMED, THEY SHALL BE RACK MOUNTED.

12. QUADRUPOLE DETECTOR LOOPS SHALL HAVE 3 TURNS WITH SIX WIRES IN THE CENTER SLOT. 6'X6' EXTENDED CALL DETECTOR LOOPS SHALL HAVE THE NUMBER OF TURNS SPECIFIED IN THE DETECTOR LOOP REQUIREMENTS AND CALCULATIONS SCHEDULE.

13. CABLE MARKING TAPE SHALL BE INCLUDED WITH THE PAY ITEM "UNDERGROUND CONDUIT" AND INSTALLED PER ARTICLE 810.04 (A) OF THE STANDARD SPECIFICATION FOR ROAD AND BRIDGE CONSTRUCTION.

14. A 1/4" DIAMETER CONTINUOS NYLON PULL ROPE SHALL BE FURNISHED AND INSTALLED IN ALL CONDUITS. THIS WORK SHALL BE INCLUDED WITH THE CONDUIT PAY ITEMS.

15. ANY EXTENDERS NECESSARY FOR INSTALLATION OF THE PEDESTRIAN PUSH BUTTONS SHALL BE INCIDENTAL TO THE PRICE FOR PEDESTRIAN PUSH-BUTTON.

16. ALL EXISTING TRAFFIC SIGNAL EQUIPMENT TO BE REMOVED SHALL REMAIN THE PROPERTY OF ST. CLAIR COUNTY DEPARTMENT OF ROADS AND BRIDGES PER THEIR DISCRETION AND SHALL BE DELIVERED TO THEIR MAINTENANCE FACILITY LOCATED AS DIRECTED BY THE ENGINEER. 40 N. WATERWORKS DRIVE, BELLEVILLE, IL 62223.

17. EXISTING TRAFFIC SIGNAL EQUIPMENT, CONCRETE FOUNDATIONS AND HANDHOLES SHALL BE REMOVED IN ACCORDANCE WITH THE RESPECTIVE SPECIAL PROVISIONS. THE CONDUIT SHALL BE ABANDONED IN PLACE AND THE CABLES SHALL BE REMOVED.

18. THE FOLLOWING IDOT STANDARDS SHALL APPLY TO CONSTRUCTION OF THE SIGNALS: 000001-08, 720001-01, 720016-04, 814001-03, 814006-03, 838001-01, 857001-01, 873001-02, 877001-08, 878001-11, 880006-01, 886001-01, 886006-01.

CODE NUMBER	ITEM	UNIT	QUANTITY
72000100	SIGN PANEL - TYPE 1	SQ FT	9.4
72000200	SIGN PANEL - TYPE 2	SQ FT	33.0
72400310	REMOVE SIGN PANEL - TYPE 1	SQ FT	7.5
72400320	REMOVE SIGN PANEL - TYPE 2	SQ FT	25.0
81028320	UNDERGROUND CONDUIT, PVC, 1" DIA.	FOOT	172
81028340	UNDERGROUND CONDUIT, PVC, 1 1/2" DIA.	FOOT	690
81028360	UNDERGROUND CONDUIT, PVC, 2 1/2" DIA.	FOOT	109
81028380	UNDERGROUND CONDUIT, PVC, 3 1/2" DIA.	FOOT	210
81028390	UNDERGROUND CONDUIT, PVC, 4" DIA.	FOOT	6
81400100	HANDHOLE	EACH	4
81400300	DOUBLE HANDHOLE	EACH	1
87301215	ELECTRIC CABLE IN CONDUIT, SIGNAL NO. 14 2C	FOOT	228
87301225	ELECTRIC CABLE IN CONDUIT, SIGNAL NO. 14 3C	FOOT	228
87301245	ELECTRIC CABLE IN CONDUIT, SIGNAL NO. 14 5C	FOOT	1915
87301255	ELECTRIC CABLE IN CONDUIT, SIGNAL NO. 14 7C	FOOT	503
87301305	ELECTRIC CABLE IN CONDUIT, LEAD IN, NO. 14 1 PAIR	FOOT	2851
87301815	ELECTRIC CABLE IN CONDUIT, SERVICE, NO. 6 3C	FOOT	222
87301900	ELECTRIC CABLE IN CONDUIT, EQUIPMENT GROUNDING CONDUCTOR, NO. 6 1C	FOOT	1937
87502700	TRAFFIC SIGNAL POST, ALUMINUM 16 FT.	EACH	1
87700140	STEEL MAST ARM ASSEMBLY AND POLE, 20 FT	EACH	1
87700280	STEEL MAST ARM ASSEMBLY AND POLE, 48 FT.	EACH	1
87700320	STEEL MAST ARM ASSEMBLY AND POLE, 55 FT.	EACH	1
87800100	CONCRETE FOUNDATION, TYPE A	FOOT	3
87800200	CONCRETE FOUNDATION, TYPE D	FOOT	3
87800400	CONCRETE FOUNDATION, TYPE E 30-INCH DIAMETER	FOOT	10
87800415	CONCRETE FOUNDATION, TYPE E 36-INCH DIAMETER	FOOT	28
88040070	SIGNAL HEAD, POLYCARBONATE, LED, 1-FACE, 3-SECTION, BRACKET MOUNTED	EACH	4
88040090	SIGNAL HEAD, POLYCARBONATE, LED, 1-FACE, 3-SECTION, MAST ARM MOUNTED	EACH	6
88040150	SIGNAL HEAD, POLYCARBONATE, LED, 1-FACE, 5-SECTION, BRACKET MOUNTED	EACH	1
88040160	SIGNAL HEAD, POLYCARBONATE, LED, 1-FACE, 5-SECTION, MAST ARM MOUNTED	EACH	1
88102825	PEDESTRIAN SIGNAL HEAD, POLYCARBONATE, LED, 1-FACE, BRACKET MOUNTED WITH COUNT DOWN TIMER	EACH	2
88200300	TRAFFIC SIGNAL BACKPLATE, PLASTIC	EACH	7
88500520	INDUCTION LOOP DETECTOR AMPLIFIER WITH CALL DELAY AND CALL CARRY-OVER, DIGITAL DESIGN	EACH	11
88600100	DETECTOR LOOP, TYPE I	FOOT	1376
88800100	PEDESTRIAN PUSH BUTTON	EACH	2
89501420	RELOCATE EXISTING EMERGENCY VEHICLE PRIORITY SYSTEM, COMPLETE	EACH	1
89502300	REMOVE ELECTRIC CABLE FROM CONDUIT	FOOT	3464
89502375	REMOVE EXISTING TRAFFIC SIGNAL EQUIPMENT	EACH	3
89502380	REMOVE EXISTING HANDHOLE	EACH	4
89502382	REMOVE EXISTING DOUBLE HANDHOLE	EACH	1
89502385	REMOVE EXISTING CONCRETE FOUNDATION	EACH	4
X0324085	EMERGENCY VEHICLE PRIORITY SYSTEM LINE SENSOR CABLE, NO. 20 3/C	FOOT	126
X8950103	RELOCATE EX. TRAFFIC SIGNAL CONTROL AND CABINET, COMPLETE	EACH	1

DETECTOR LOOP REQUIREMENTS AND CALCULATIONS
INTERSECTION OF FRANK SCOTT PKWY WITH GREEN MOUNT CROSSING DR

LOOP	PHASE	LOOP SIZE (FT)	REQUIRED # OF TURNS	CALCULATED INDUCTANCE MICROHENRIES	CALCULATED RESISTANCE OHMS
FRANK SCOTT PKWY EB LT TURN	5	6' X 50' (Q)	3-6-3	825.73	2.493
FRANK SCOTT PKWY EB (LT SIDE)	2	6' X 50' (Q)	3-6-3	825.82	2.495
FRANK SCOTT PKWY EB (RT SIDE)	2	6' X 50' (Q)	3-6-3	825.97	2.499
FRANK SCOTT PKWY EB CCO (LT SIDE)	2	6' X 6'	6	371.41	3.009
FRANK SCOTT PKWY EB CCO (RT SIDE)	2	6' X 6'	6	371.41	3.009
FRANK SCOTT PKWY WB (LT SIDE)	6	6' X 50' (Q)	3-6-3	822.32	2.416
FRANK SCOTT PKWY WB (RT SIDE)	6	6' X 50' (Q)	3-6-3	822.59	2.422
FRANK SCOTT PKWY WB CCO (LT SIDE)	6	6' X 6'	6	367.89	2.929
FRANK SCOTT PKWY WB CCO (RT SIDE)	6	6' X 6'	6	370.51	2.988
GREEN MOUNT CROSSING DR LT TURN	4	6' X 50' (Q)	3-6-3	797.86	1.860
GREEN MOUNT CROSSING DR RT TURN	4	6' X 50' (Q)	3-6-3	797.88	1.860

THE ABOVE VALUES ARE CALCULATED OF COMBINED LOOP AND LEAD-IN INDUCTANCE AND RESISTANCE.
ACTUAL MEASURED VALUES SHOULD BE WITHIN +/- 20% OF THESE VALUES

EXISTING AND PROPOSED SEQUENCE OF OPERATION

PHASE	1	EB 2	3	SB 4	EB LT 5	WB 6	7	8
MOVEMENT		→		↲ ↳	↱	←(P6)→ ↰		
CONCURRENT MOVEMENT PERMITTED	NOT USED	5 OR 6	NOT USED		2	2	NOT USED	NOT USED

∗ PEDESTRIAN MOVEMENT DISPLAYED UPON ACTUATION ONLY.

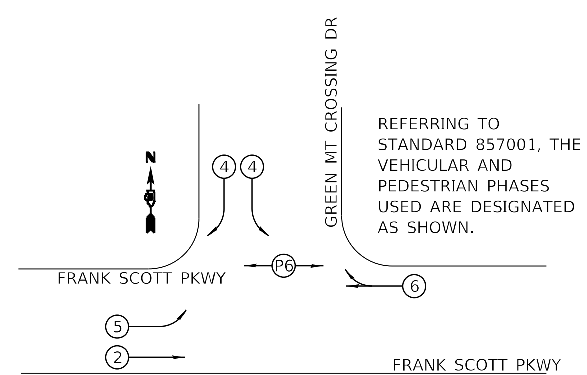

REFERRING TO STANDARD 857001, THE VEHICULAR AND PEDESTRIAN PHASES USED ARE DESIGNATED AS SHOWN.

TRAFFIC SIGNAL LEGEND

EXISTING SIGNAL HEAD	PROPOSED SIGNAL HEAD
EXISTING TRAFFIC SIGNAL MAST ARM	PROPOSED TRAFFIC SIGNAL MAST ARM
EXISTING HANDHOLE	PROPOSED HANDHOLE
EXISTING DOUBLE HANDHOLE	PROPOSED HANDHOLE
EXISTING CONTROLLER	PROPOSED RELOCATED CONTROLLER
EXISTING SERVICE INSTALLATION	RELOCATED SERVICE INSTALLATION
EXISTING DETECTOR LOOP	PROPOSED DETECTOR LOOP
EXISTING CCO DETECTOR LOOP	PROPOSED CCO DETECTOR LOOP
EXISTING CONDUIT	PROPOSED CONDUIT, SIZE SPECIFIED
EXISTING E.V.P.S. DETECTOR AND BEACON	PROPOSED PEDESTRIAN PUSH-BUTTON
PVCC POLYVINYL CHLORIDE CONDUIT	PROPOSED PEDESTRIAN SIGNAL HEAD
GSC GALVANIZED STEEL CONDUIT	RELOCATED E.V.P.S. DETECTOR & BEACON

MODEL: Default
FILE NAME: P:\2018\180788\4 CADD - DWG\4.7 Tran\CADD Sheets\Federal\180788A-sht-ts-01.dgn

TWM ENGINEERING & GEOSPATIAL SERVICES
TWM, INC.
WWW.TWM-INC.COM
IL DESIGN FIRM LICENSE NO: 184-001220

USER NAME = efisher
PLOT SCALE = 40.0000 ' / in.
PLOT DATE = 6/17/2025

DESIGNED - EKF | REVISED -
DRAWN - EKF/KDD | REVISED -
CHECKED - JWS | REVISED -
DATE - 06/2025 | REVISED -

St. Clair County

ST. CLAIR COUNTY DEPARTMENT OF ROADS AND BRIDGES

TRAFFIC SIGNAL GENERAL NOTES, DETAILS & SUMMARY OF QUANTITIES
FRANK SCOTT PARKWAY /GREEN MOUNT CROSSING DRIVE

SCALE: NTS | SHEET 1 OF 5 SHEETS | STA. TO STA.

F.A.U. RTE.	SECTION	COUNTY	TOTAL SHEETS	SHEET NO.
9330	24-00301-26-PW	ST. CLAIR	191	118

CONTRACT NO. 97872
ILLINOIS | FED. AID PROJECT

NOTE:

1. EX. TRAFFIC CONTROLLER. RELOCATE EX. TRAFFIC SIGNAL CONTROLLER AND CABINET, COMPLETE. ALL CABLES SHALL BE REMOVED FROM THE MISCELLANEOUS TRAFFIC SIGNAL EQUIPMENT AND REPLACED WITH NEW CABLE.
2. REMOVE EX. CONC. FOUNDATION AND TRAFFIC SIGNAL EQUIPMENT. EXISTING TRAFFIC SIGNAL EQUIPMENT INCLUDES BUT NOT LIMITED TO THE MAST ARM ASSEMBLY AND POST AND SIGNAL HEADS. REMOVE THE CONDUIT AND CABLE BETWEEN THE EX. MAST ARM TO BE REMOVED AND EX. DOUBLE HANDHOLE TO BE REMOVED, COST INDLUDED IN COST OF REMOVE EX. TRAFFIC SIGNAL EQUIPMENT. RELOCATE EX. E.V.P.S. DETECTOR AND BEACON.
3. REMOVE EX. CONC. FOUNDATION AND TRAFFIC SIGNAL EQUIPMENT. EXISTING TRAFFIC SIGNAL EQUIPMENT INCLUDES BUT NOT LIMITED TO THE MAST ARM ASSEMBLY AND POST AND SIGNAL HEADS. REMOVE THE CONDUIT AND CABLE BETWEEN THE EX. MAST ARM TO BE REMOVED AND EX. HANDHOLE TO BE REMOVED, COST INDLUDED IN COST OF REMOVE EX. TRAFFIC SIGNAL EQUIPMENT.
4. THE EX. DETECTOR LOOP WILL BE REMOVED AS NECESSARY TO NOT INTERFERE WITH THE PR. DET. LOOP, TY I. THIS WILL INCLUDE REMOVING THE EX. CABLE TO THE EX. DOUBLE HANDHOLE, TO BE REMOVED. COST INCLUDED IN COST OF PR. DET. LOOP, TY I.
5. CONDUIT TO BE REMOVED WILL BE INCLUDED IN THE COST OF REMOVING THE OTHER VARIOUS REMOVALS IN THE AREA.
6. REC = REMOVE ELECTRIC CABLE FROM CONDUIT

MAST ARM SCHEDULE						
	LOCATION STA. OFFSET	ARM LENGTH	FOUNDATION DIAMETER	* FOUNDATION DEPTH	TOP OF FND ELEV	TOP OF FINISHED GRADE LINE
NW	98+88.05, 54.78' LT	55'	36"	15'-0"	XXX.XX	XXX.XX
SW	99+10.35, 48.00' RT	20'	30"	10'-0"	XXX.XX	XXX.XX
SE	100+16.18, 48.00' RT	48'	36"	13'-0"	XXX.XX	XXX.XX

MAST ARM FOUNDATION DETAILS SHALL BE IN ACCORDANCE WITH STANDARD 878001 EXCEPT FOR LENGTHS AS MODIFIED BY THE MAST ARM SCHEDULE. FOUNDATION DEPTH IS BASED ON ASSUMED MAST ARM ASSEMBLY AND POLE CONFIGURATIONS. MAST ARM ASSEMBLY AND POLE SHOP DRAWINGS SHALL BE SUBMITTED TO THE ENGINEER FOR FINAL REVIEW AND APPROVAL OF THE FOUNDATION DEPTHS.

* FOR FOUNDATIONS DRILLED IN BACKSLOPE REGIONS, DEPTH SHALL BE MEASURED FROM THE FINISH GRADE AT THE CENTERLINE OF THE FOUNDATION.

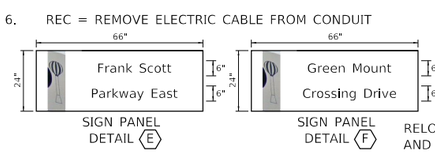

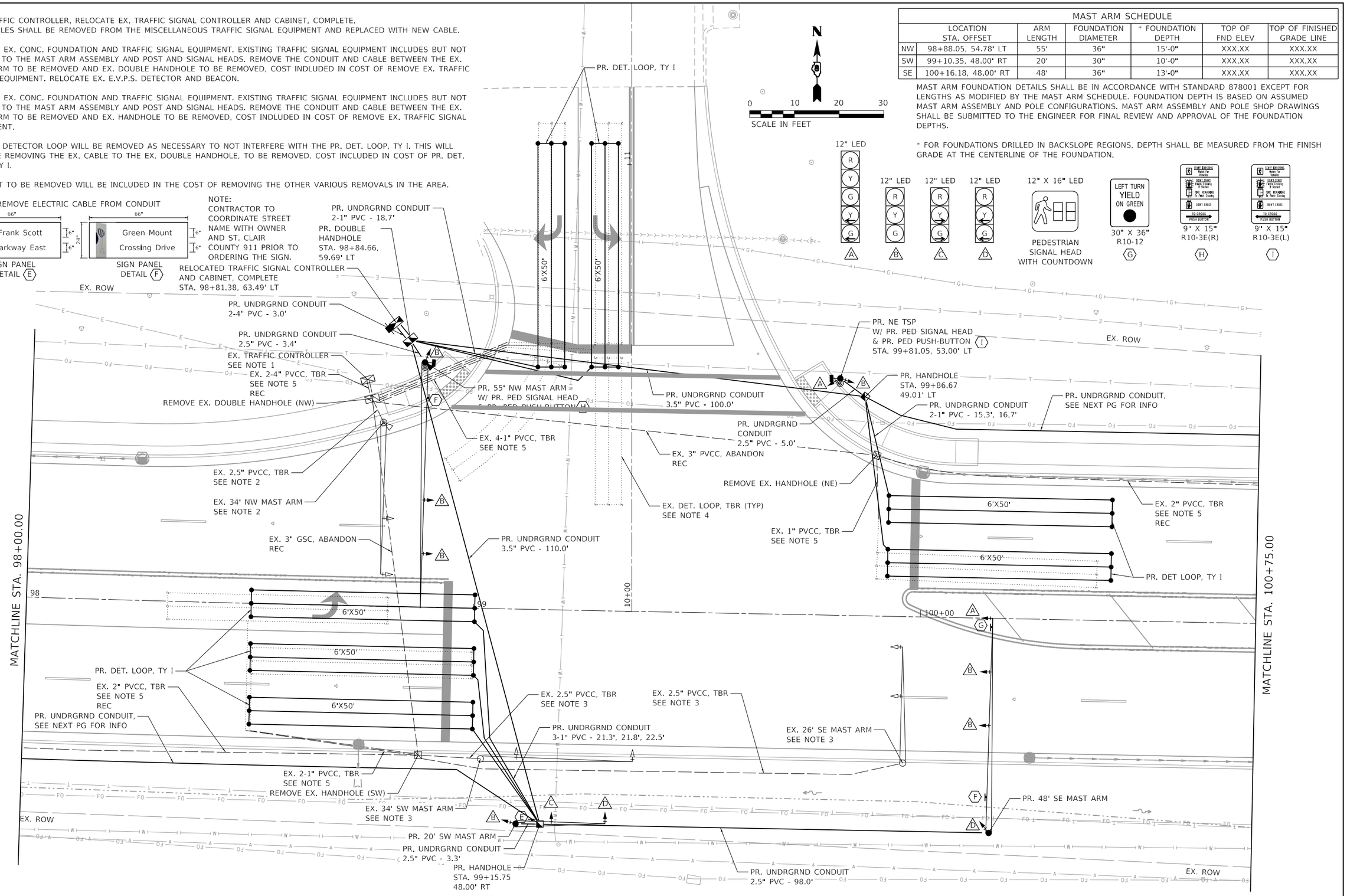

MODEL: Default
FILE NAME: P:\2018\18078\4 CADD - DWG\4.7 Traffic\CADD Sheets\Federal\18078BA-sht-sc-02.dgn

TWM ENGINEERING GEOSPATIAL SERVICES	TWM, INC. WWW.TWM-INC.COM IL DESIGN FIRM LICENSE NO: 184-001220	USER NAME = efisher	DESIGNED - EKF	REVISED -	ST. CLAIR COUNTY DEPARTMENT OF ROADS AND BRIDGES	TRAFFIC SIGNAL PLAN FRANK SCOTT PARKWAY /GREEN MOUNT CROSSING DRIVE
			DRAWN - EKF/KDD	REVISED -		
		PLOT SCALE = 20.0000 ' / in.	CHECKED - JWS	REVISED -		SCALE: 1"=10' SHEET 2 OF 5 SHEETS STA. TO STA.
		PLOT DATE = 6/17/2025	DATE - 06/2025	REVISED -		

F.A.U. RTE.	SECTION	COUNTY	TOTAL SHEETS	SHEET NO.
9330	24-00301-26-PW	ST. CLAIR	191	119
		CONTRACT NO. 97872		
		ILLINOIS	FED. AID PROJECT	

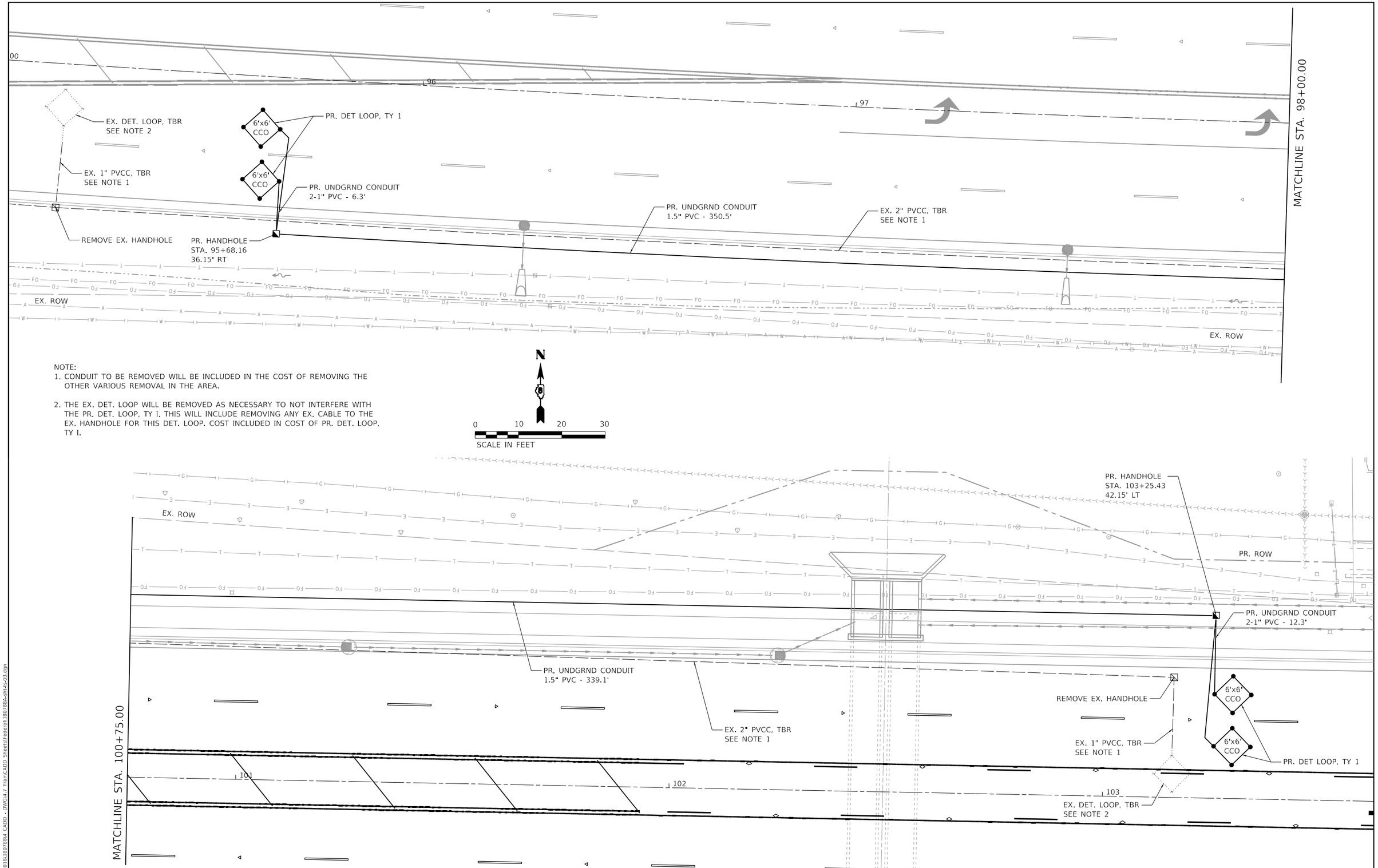

NOTE:
1. CONDUIT TO BE REMOVED WILL BE INCLUDED IN THE COST OF REMOVING THE OTHER VARIOUS REMOVAL IN THE AREA.

2. THE EX. DET. LOOP WILL BE REMOVED AS NECESSARY TO NOT INTERFERE WITH THE PR. DET. LOOP, TY I. THIS WILL INCLUDE REMOVING ANY EX. CABLE TO THE EX. HANDHOLE FOR THIS DET. LOOP. COST INCLUDED IN COST OF PR. DET. LOOP, TY I.

MODEL: Default
FILE NAME: P:\2018\18078B4 CADD - DWG\4.7 Tran\CADD Sheets\Federal\18078BA-sht42-03.dgn

TWM ENGINEERING & GEOSPATIAL SERVICES
TWM, INC.
WWW.TWM-INC.COM
IL DESIGN FIRM LICENSE NO: 184-001220

USER NAME = efisher	DESIGNED - EKF	REVISED -	
	DRAWN - EKF/KDD	REVISED -	
PLOT SCALE = 20.0000 ' / in.	CHECKED - JWS	REVISED -	
PLOT DATE = 6/17/2025	DATE - 06/2025	REVISED -	

ST. CLAIR COUNTY DEPARTMENT OF ROADS AND BRIDGES

TRAFFIC SIGNAL PLAN
FRANK SCOTT PARKWAY /GREEN MOUNT CROSSING DRIVE

SCALE: 1"=10' | SHEET 3 OF 5 SHEETS | STA. | TO STA.

F.A.U. RTE.	SECTION	COUNTY	TOTAL SHEETS	SHEET NO.
9330	24-00301-26-PW	ST. CLAIR	191	120
		CONTRACT NO. 97872		
	ILLINOIS	FED. AID PROJECT		

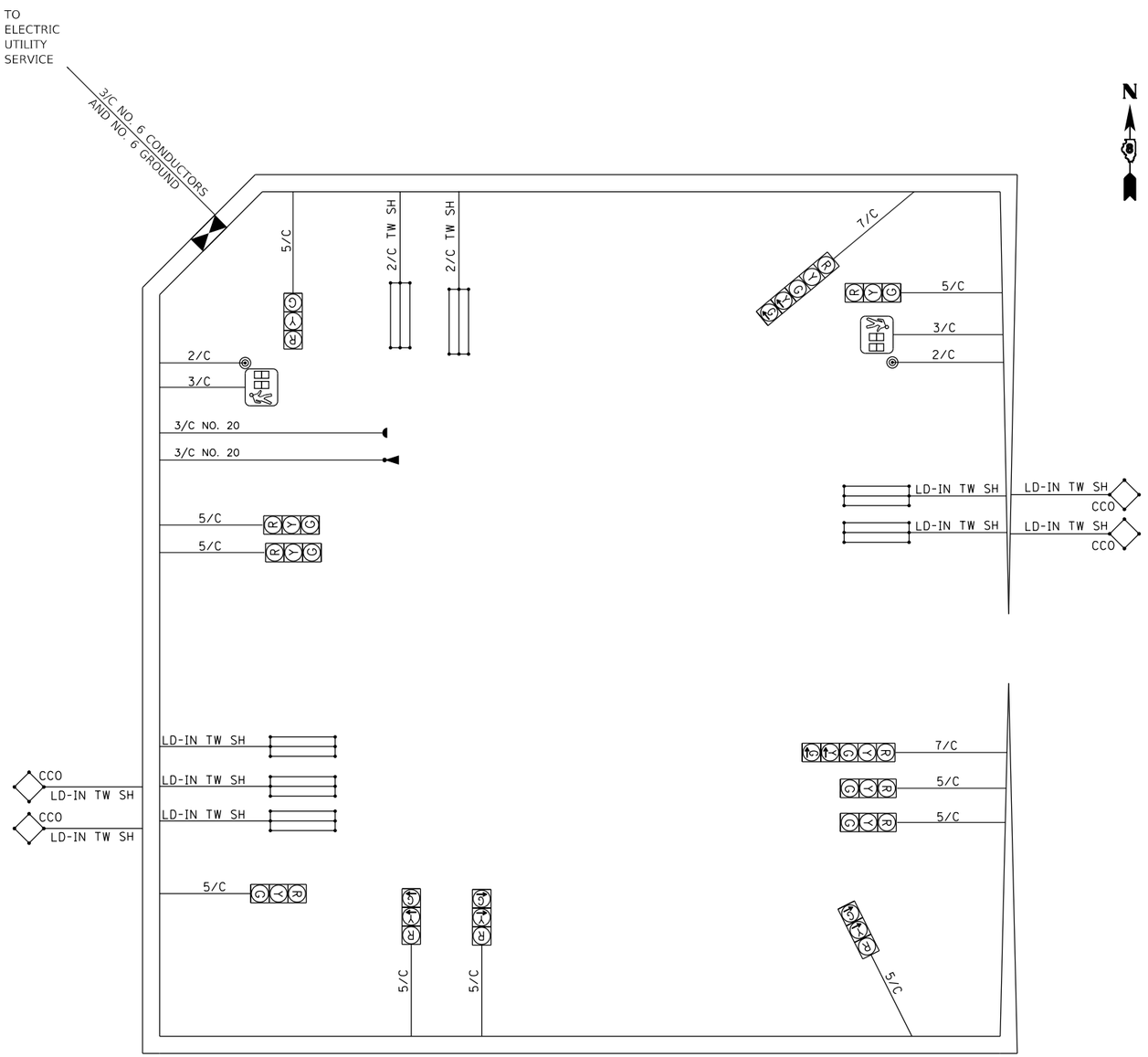

LEGEND

———	PROPOSED CABLE
2/C	INDICATES NUMBER OF CONDUCTORS IN CABLE
TW SH	INDICATES TWISTED SHIELDED CABLE
	PR. TRAFFIC SIGNAL CONTROLLER CABINET
G	PR. 12" TRAFFIC SIGNAL SECTION. LETTER INDICATES COLOR.
	PROPOSED DETECTOR LOOP, CD INDICATES CALL DELAY
CCO	EXISTING 6' X 6' CALL CARRY OVER DETECTOR LOOP
	PROPOSED PEDESTRIAN SIGNAL HEAD, POLYCARBONATE, LED, 1 FACE, BRACKET MOUNTED, WITH COUNT DOWN TIMER
	PROPOSED PEDESTRIAN PUSH-BUTTON
	RELOCATED E.V.P.S. DETECTOR
	RELOCATED E.V.P.S. BEACON

MODEL: Default
FILE NAME: P:\2018\18078\04 CADD - DWG\4.7 Tran\CADD Sheets\Federal\18078A-sht-tls-04.dgn

TWM ENGINEERING & GEOSPATIAL SERVICES
TWM, INC.
WWW.TWM-INC.COM
IL DESIGN FIRM LICENSE NO: 184-001220

USER NAME = efisher	DESIGNED - EKF	REVISED -
	DRAWN - EKF/KDD	REVISED -
PLOT SCALE = 40.0000 ' / in.	CHECKED - JWS	REVISED -
PLOT DATE = 6/17/2025	DATE - 06/2025	REVISED -

ST. CLAIR COUNTY DEPARTMENT OF ROADS AND BRIDGES

TRAFFIC SIGNAL CABLE DIAGRAM
FRANK SCOTT PARKWAY /GREEN MOUNT CROSSING DRIVE

SCALE: NTS | SHEET 4 OF 5 SHEETS | STA. | TO STA.

F.A.U. RTE.	SECTION	COUNTY	TOTAL SHEETS	SHEET NO.
9330	24-00301-26-PW	ST. CLAIR	191	121
		CONTRACT NO. 97872		
	ILLINOIS	FED. AID PROJECT		

SCI Engineering Inc.
650 Pierce Blvd, O'Fallon, IL 62269
Geotechnical Engineering
http://www.sciengineering.com

CPT: C-1

Project: **Frank Scott Parkway Widening Green Mount Road to Cross Street: 2019-0632.11**
Location: **Shiloh, Illinois**

Total depth: 25.10 ft, Date: 2/6/2025
Surface Elevation: 538.00 ft

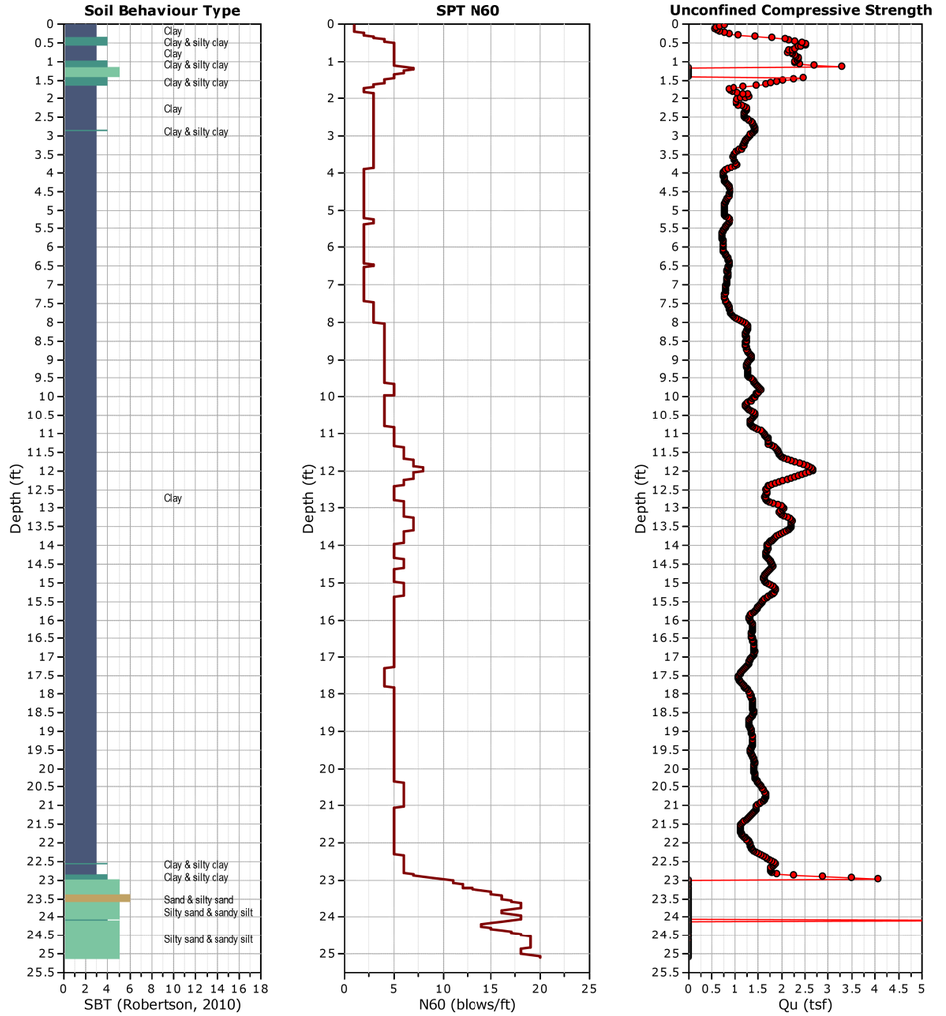

SCI Engineering Inc.
650 Pierce Blvd, O'Fallon, IL 62269
Geotechnical Engineering
http://www.sciengineering.com

CPT: C-2

Project: **Frank Scott Parkway Widening Green Mount Road to Cross Street: 2019-0632.11**
Location: **Shiloh, Illinois**

Total depth: 25.10 ft, Date: 2/6/2025
Surface Elevation: 537.00 ft

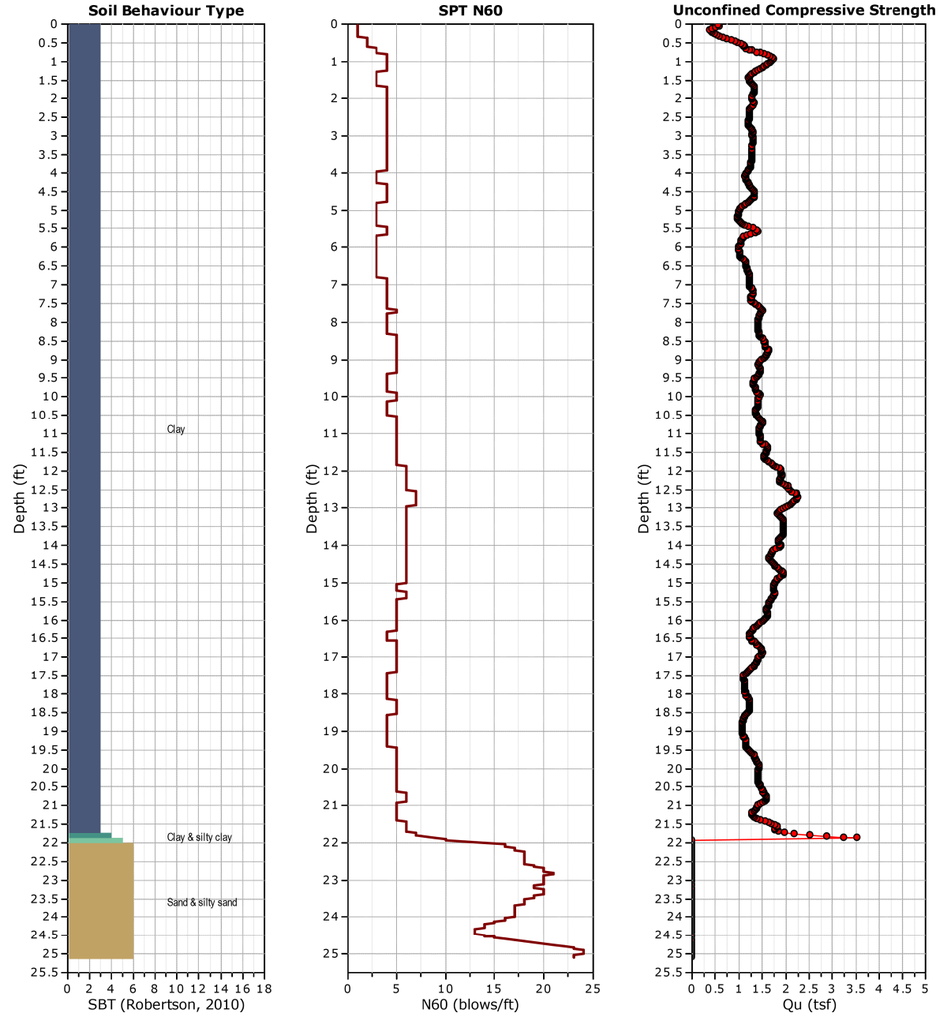

MODEL: Default
FILE NAME= P:\2018\180788\4 CADD - DWG\4.7 Tran\CADD Sheets\Federal\180788A-tht-t-05.dgn

TWM ENGINEERING GEOSPATIAL SERVICES	TWM, INC. WWW.TWM-INC.COM	USER NAME = efisher	DESIGNED - EKF	REVISED -	ST. CLAIR COUNTY DEPARTMENT OF ROADS AND BRIDGES
	IL DESIGN FIRM LICENSE NO: 184-001220		DRAWN - EKF/KDD	REVISED -	
		PLOT SCALE = 40.0000 ' / in.	CHECKED - JWS	REVISED -	
		PLOT DATE = 6/17/2025	DATE - 06/2025	REVISED -	

TRAFFIC SIGNAL SOIL BORINGS
FRANK SCOTT PARKWAY /GREEN MOUNT CROSSING DRIVE

SCALE: NTS | SHEET 5 OF 5 SHEETS | STA. | TO STA.

F.A.U. RTE.	SECTION	COUNTY	TOTAL SHEETS	SHEET NO.
9330	24-00301-26-PW	ST. CLAIR	191	122
		CONTRACT NO. 97872		
	ILLINOIS	FED. AID PROJECT		

DESIGN INFORMATION - CULVERT NO. 1

DUAL PRECAST CONCRETE BOX
CULVERTS 8'X5' @ 24 FT.
LENGTH = 48 FT.
SKEW = 20°56'37.5"
SLOPE = 0.19%
US INV. = 523.23
DS INV. = 522.47

DA = 400 ACRE
Q50 = 621 CFS
Q100 = 773 CFS
HW ELEV. (50YR) = 529.90
50-YR OUTLET VEL. = 11.6 FT/S
FREEBOARD = 5.9 FT

CONCRETE COLLAR = 1.72 CU. YD. PER COLLAR
CONCRETE COLLAR TOTAL VOLUME = 1.72 CU. YD.

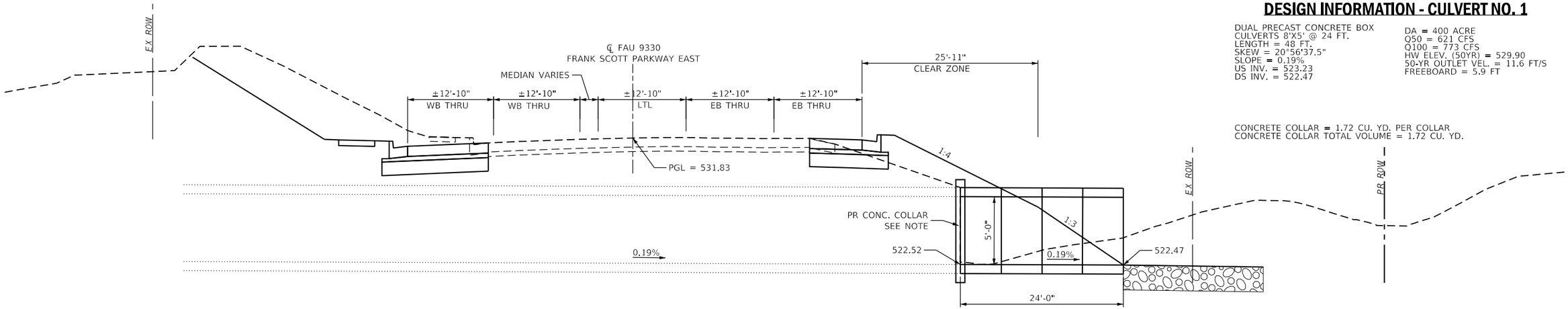

ELEVATION

NOTES:

1. SEE MULTI-CELL PRECAST CONCRETE BOX CULVERT APRON END SECTIONS DETAIL SHEET 2 OF 6 FOR "SECTION THRU CONNECTION COLLAR" AT JOINT BETWEEN EXISTING AND PROPOSED PRECAST CULVERT SECTIONS.

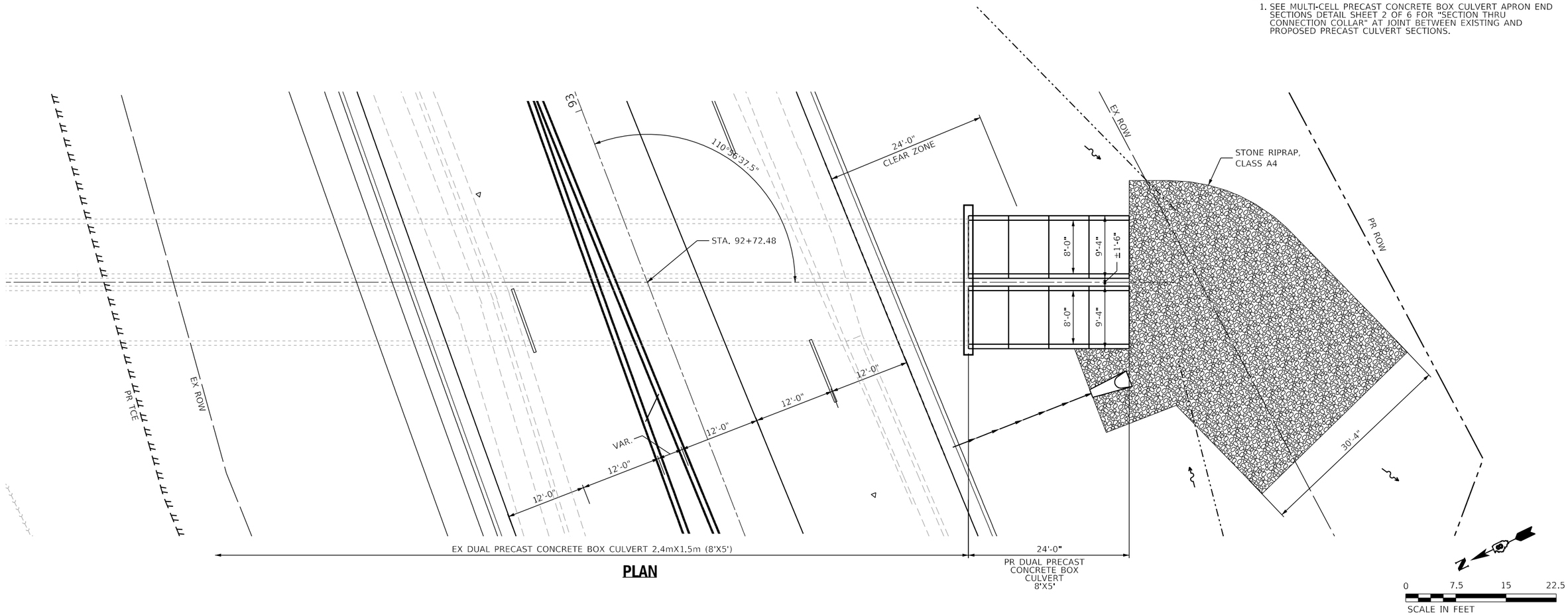

PLAN

MODEL: Default
FILE NAME: P:\2018\180788\4 CADD - DWG\4.7 Tran\CADD Sheets\Federal\180788A-sht-dtl-culvert-01.dgn

TWM ENGINEERING & GEOSPATIAL SERVICES	TWM, INC. WWW.TWM-INC.COM IL DESIGN FIRM LICENSE NO: 184-001220	USER NAME = efisher	DESIGNED - EKF	REVISED -	ST. CLAIR COUNTY DEPARTMENT OF ROADS AND BRIDGES
			DRAWN - EKF/KDD	REVISED -	
		PLOT SCALE = 15.0000 ' / in.	CHECKED - JWS	REVISED -	
		PLOT DATE = 6/17/2025	DATE - 06/2025	REVISED -	

CULVERT NO 1 – STA. 92+72.48
EXTENSION DETAIL

SCALE: | SHEET 1 OF 3 SHEETS | STA. | TO STA.

F.A.U. RTE.	SECTION	COUNTY	TOTAL SHEETS	SHEET NO.
9330	24-00301-26-PW	ST. CLAIR	191	123
		CONTRACT NO. 97872		
		ILLINOIS	FED. AID PROJECT	

DESIGN INFORMATION - CULVERT NO. 2

DUAL PRECAST CONCRETE BOX CULVERTS 6'X4' (13 FT N / 6 FT S)
LENGTH = 38 FT.
SKEW = 0°
SLOPE = 0.70%
US INV. = 534.98
DS INV. = 534.36

DA = 28 ACRE
Q50 = 61 CFS
Q100 = 69 CFS
HW ELEV. (50YR) = 536.64
50-YR OUTLET VEL. = 2.5 FT/S
FREEBOARD = 5.4 FT

* PRECAST BOX CULVERT TAPERED END SECTION = 2 EACH
* MULTI-CELL PRECAST CONCRETE BOX CULVERT APRON END SECTION = 1 EACH
TRAVERSABLE PIPE GRATE = 61.0 FEET
CONCRETE COLLAR = 1.40 CU. YD. PER COLLAR
CONCRETE COLLAR TOTAL VOLUME = 2.80 CU. YD.
* PAID FOR AS BOX CULVERT END SECTIONS, CULVERT NO. 2

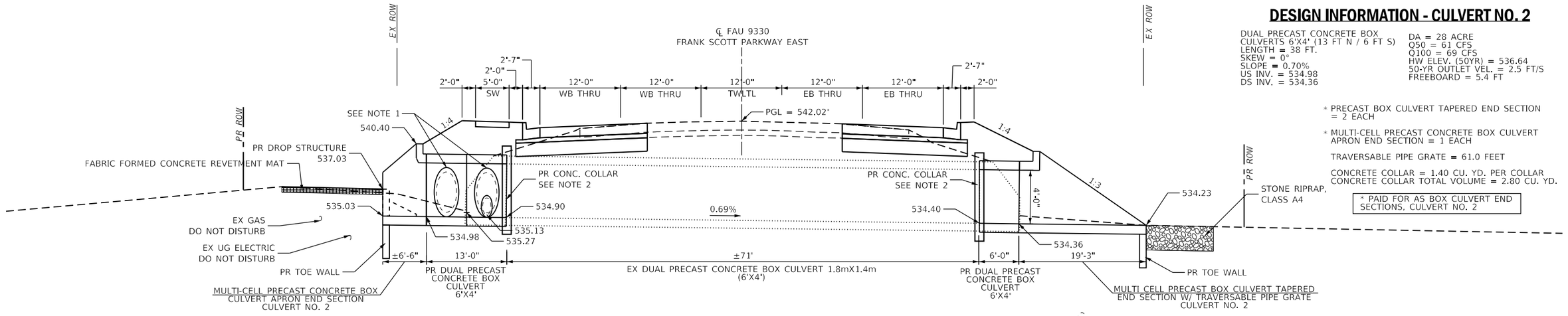

ELEVATION

EX WATER DO NOT DISTURB

NOTES:

1. OPENING SHALL BE CAST IN SIDES OF BOX CULVERT TO ACCEPT THE DUAL 36" RC PIPE FROM THE EAST, AND THE 15" RC PIPE FROM THE WEST.
2. SEE MULTI-CELL PRECAST CONCRETE BOX CULVERT APRON END SECTIONS DETAIL SHEET 2 OF 6 FOR "SECTION THRU CONNECTION COLLAR" AT JOINT BETWEEN EXISTING AND PROPOSED PRECAST CULVERT SECTIONS.

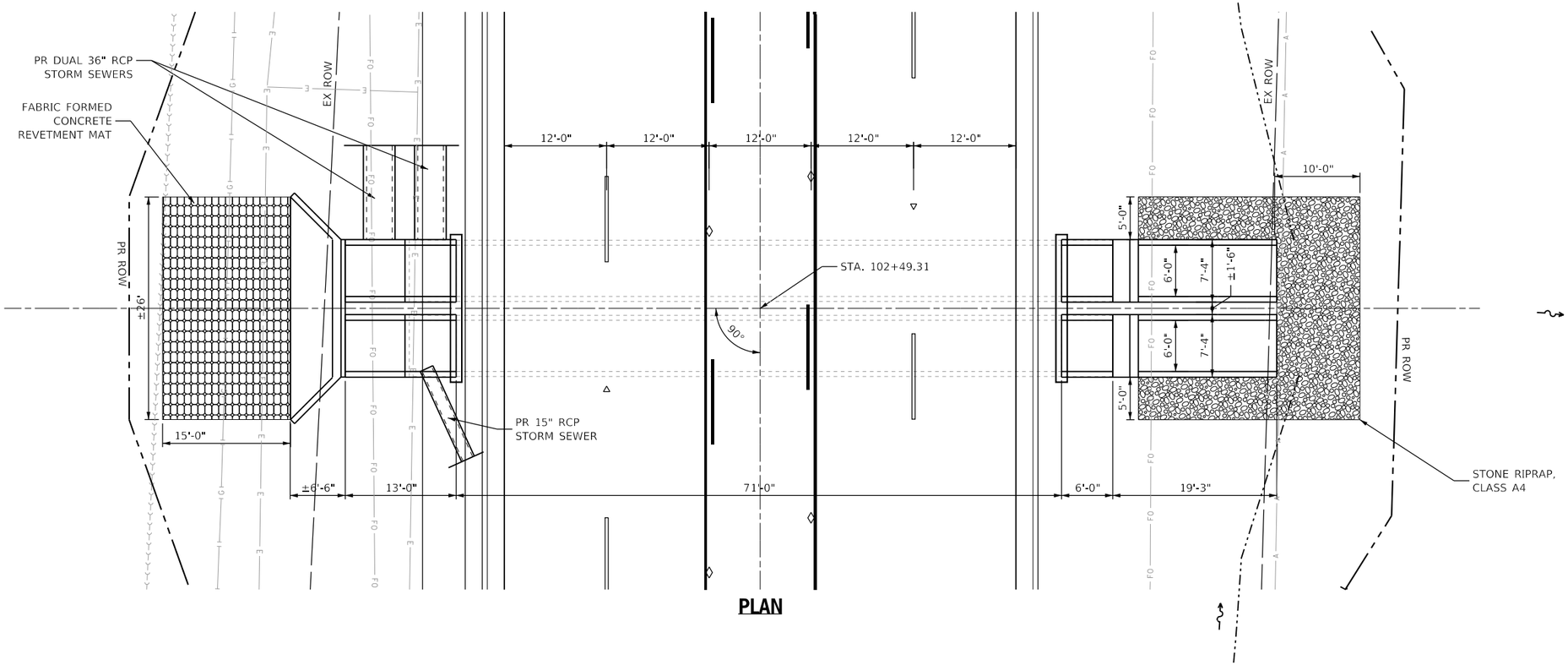

PLAN

0 7.5 15 22.5
SCALE IN FEET

MODEL: Default
FILE NAME: P:\2018\18078B\4 CADD - DWG\4.7 Tran\CADD Sheets\Federal\18078BA-sht-sht-culvert-02.dgn

TWM ENGINEERING GEOSPATIAL SERVICES	TWM, INC. WWW.TWM-INC.COM IL DESIGN FIRM LICENSE NO: 184-001220	USER NAME = efisher	DESIGNED - EKF	REVISED -	ST. CLAIR COUNTY DEPARTMENT OF ROADS AND BRIDGES
			DRAWN - EKF/KDD	REVISED -	
		PLOT SCALE = 15.0000 ' / in.	CHECKED - JWS	REVISED -	
		PLOT DATE = 6/17/2025	DATE - 06/2025	REVISED -	

CULVERT NO 2 – STA. 102+49.31
EXTENSION DETAIL

SCALE: | SHEET 2 OF 3 SHEETS | STA. | TO STA.

F.A.U. RTE.	SECTION	COUNTY	TOTAL SHEETS	SHEET NO.
9330	24-00301-26-PW	ST. CLAIR	191	124
		CONTRACT NO. 97872		
	ILLINOIS FED. AID PROJECT			

DESIGN INFORMATION - CULVERT NO. 3

DUAL PRECAST CONCRETE BOX CULVERTS 8'X4' (16 FT. N / 6' S)
LENGTH = 44 FT.
SKEW = 0°0'0"
SLOPE = 0.53%
US INV. = 556.48
DS INV. = 555.99

DA = 126 ACRE
Q50 = 227 CFS
Q100 = 262 CFS
HW ELEV. (50YR) = 559.99
50-YR OUTLET VEL. = 7.1 FT/S
FREEBOARD = 5.0 FT

* PRECAST BOX CULVERT TAPERED END SECTION = 2 EACH
* MULTI-CELL PRECAST CONCRETE BOX CULVERT APRON END SECTION = 1 EACH

TRAVERSABLE PIPE GRATE = 91.5 FEET

CONCRETE COLLAR = 1.68 CU. YD. PER COLLAR
CONCRETE COLLAR TOTAL VOLUME = 3.36 CU. YD.

* PAID FOR AS BOX CULVERT END SECTIONS, CULVERT NO. 3

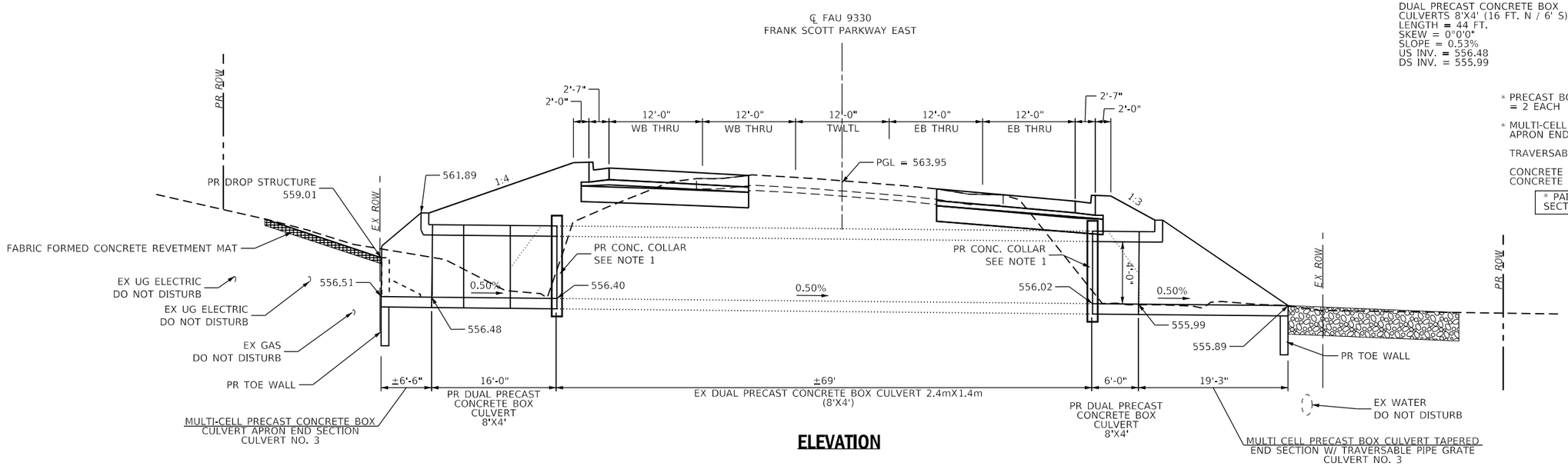

ELEVATION

NOTES:

1. SEE MULTI-CELL PRECAST CONCRETE BOX CULVERT APRON END SECTIONS DETAIL SHEET 2 OF 6 FOR "SECTION THRU CONNECTION COLLAR" AT JOINT BETWEEN EXISTING AND PROPOSED PRECAST CULVERT SECTIONS.

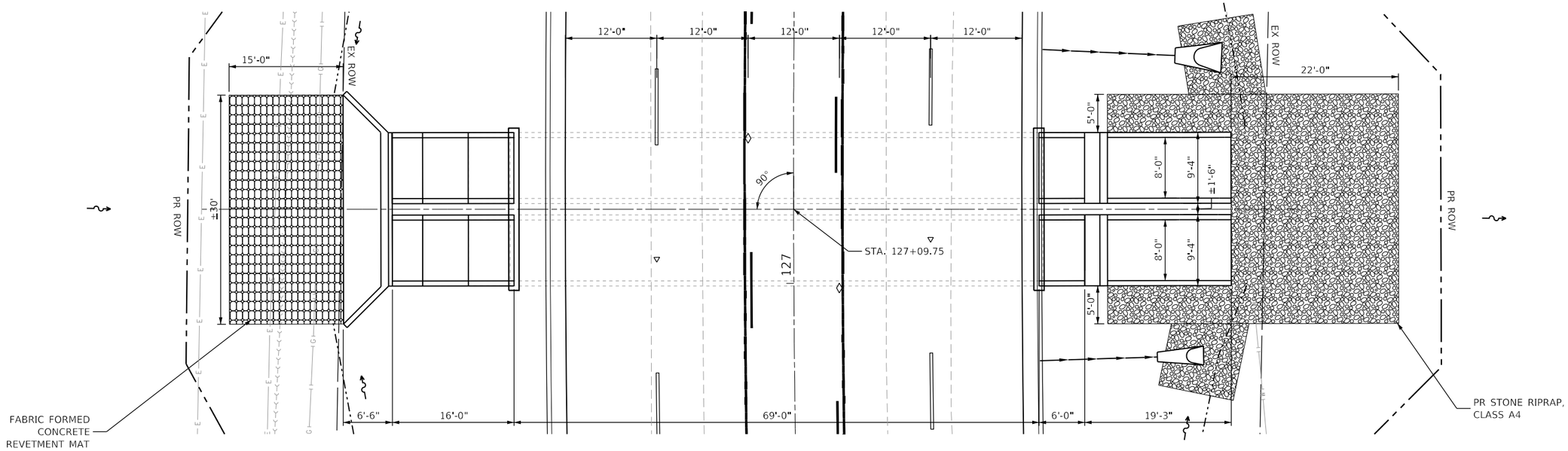

PLAN

N

0 7.5 15 22.5
SCALE IN FEET

MODEL: Default
FILE NAME: P:\2018\180788\4 CADD - DWG\4.7 Tran\CADD Sheets\Federal\180788A-sht-ctl-culvert-03.dgn

TWM ENGINEERING & GEOSPATIAL SERVICES — TWM, INC. WWW.TWM-INC.COM IL DESIGN FIRM LICENSE NO: 184-001220	USER NAME = efisher	DESIGNED - EKF	REVISED -	ST. CLAIR COUNTY DEPARTMENT OF ROADS AND BRIDGES	CULVERT NO 3 – STA. 127+09.75 EXTENSION DETAIL
		DRAWN - EKF/KDD	REVISED -		
	PLOT SCALE = 15.0000 ' / in.	CHECKED - JWS	REVISED -		
	PLOT DATE = 6/17/2025	DATE - 06/2025	REVISED -		SCALE: SHEET 3 OF 3 SHEETS STA. TO STA.

F.A.U. RTE.	SECTION	COUNTY	TOTAL SHEETS	SHEET NO.
9330	24-00301-26-PW	ST. CLAIR	191	125
		CONTRACT NO. 97872		
		ILLINOIS FED. AID PROJECT		

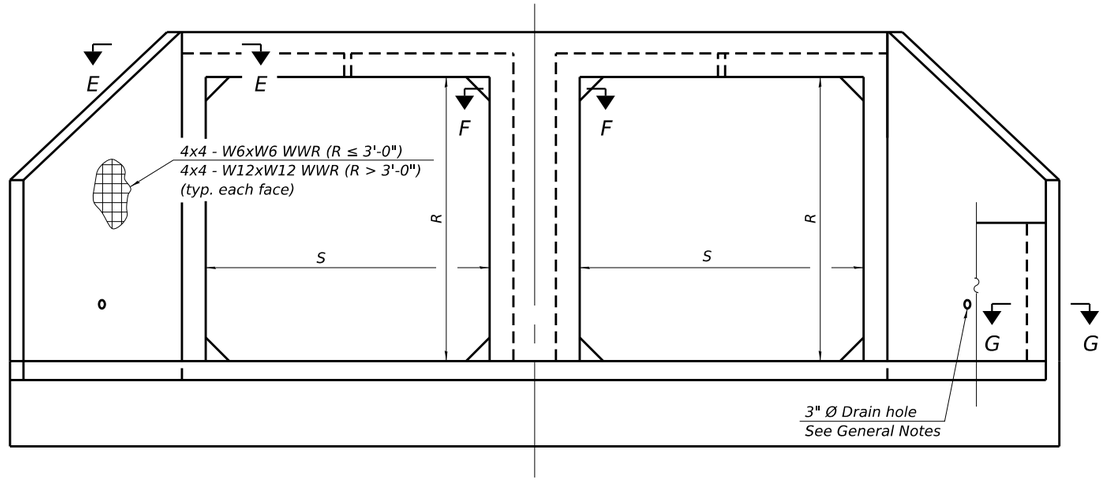

END VIEW

Drop Structure Wall not shown for clarity

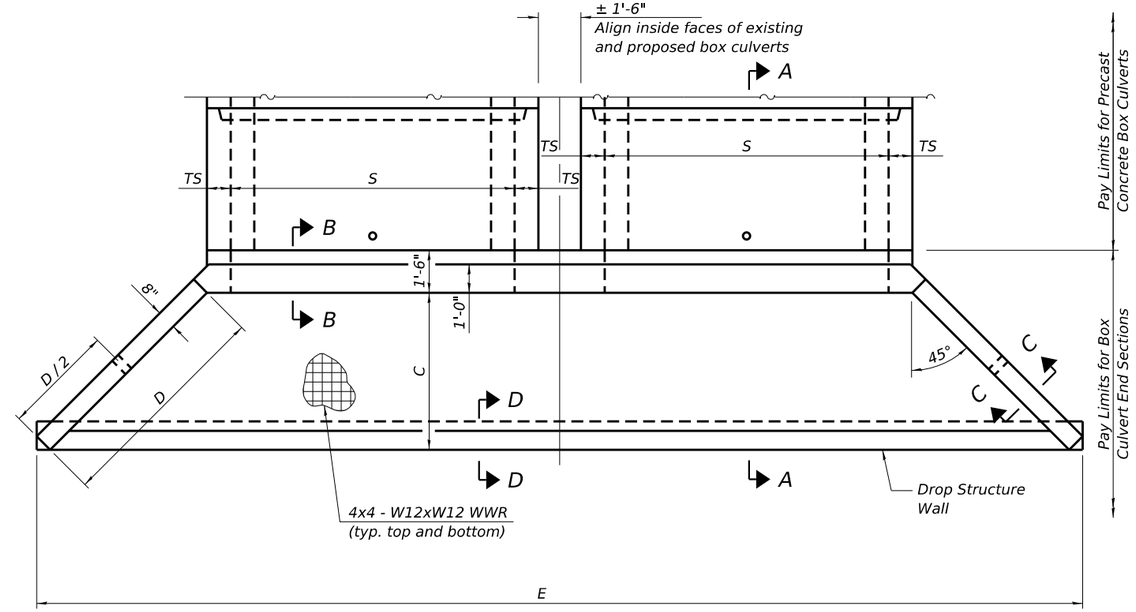

PLAN

GENERAL NOTES

Box Culvert End Sections shall be constructed according to the requirements of Section 540 of the Standard Specifications except as modified herein. End sections will be paid for at the contract unit price per each for Box Culvert End Sections.

Box section dimensions, materials, and reinforcement details for Box Culvert End Sections shall be according to the requirements for ASTM C 1577 as required for the design of the portion of the culvert within the limits of Precast Concrete Box Culverts except as modified herein.

Shop drawings that detail slab thickness and reinforcement layout for the Box Culvert End Sections shall be provided to the Engineer for review and approval. Reinforcement bars not detailed herein shall be detailed with a clear distance at the end of the reinforcement not less than ½" nor more than 2".

Details for Double Cell Box Culvert shown. Details for Triple Cell Box Culvert similar.

The details contained herein are for constructing the end sections using cast-in-place (CIP) construction. The Contractor may propose to furnish the end sections using precast construction methods and the end sections may consist of multiple precast concrete segments. The Contractor shall be responsible for determining all details associated with the precast option including any strengthening or stiffening provisions necessary for handling the precast segments. Conceptual details followed by shop drawings and design calculations sealed by an Illinois Licensed Structural Engineer shall be submitted to the Engineer for review and approval. Elements of the precast option shall at a minimum result in the same wingwall geometry and not have a thickness less than that detailed herein. The option to construct the end sections using precast construction methods shall be at no additional charge.

The contractor may use reinforcement bars in lieu of welded wire reinforcement (WWR). Reinforcement bars shall be limited to the sizes of #3 through #5 bars, a maximum spacing of the lesser of 8" or the member thickness, and shall result in an area of reinforcement equal to or greater than that provided by the WWR. Minimum lap lengths detailed herein are applicable to WWR and reinforcement bars.

Reinforcement (circumferential and longitudinal) in the precast concrete box culvert segments immediately adjacent to the box culvert end sections that is being lapped with the end section reinforcement shall not be less than that required by ASTM C 1577 for the design fill height or the reinforcement detailed for the end section, whichever is greater.

One drain hole shall be provided in each wingwall for end sections of box culverts having an opening with a clear rise greater than 3 ft. The drain hole shall be located within 1/3 of the clear rise of the box culvert and shall conform to the requirements of Article 503.11 of the Standard Specifications.

Plan dimensions and details relative to the existing structure have been taken from existing plans and are subject to nominal construction variations. The Contractor shall field verify existing dimensions and details affecting new construction and make necessary approved adjustments prior to construction or ordering of materials. Such variations shall not be cause for additional compensation for a change in scope of the work, however, the Contractor will be paid for the quantity actually furnished at the unit price bid for the work.

APRON END SECTION DIMENSIONS

							Double Cell	
Span (S)	Rise (R)	Tt , Tb , & Ts	A	B	C	D	E*	Concrete Cu. Yd.*
6'-0"	4'-0"	8"	5'-5"	3'-3"	4'-11⅜"	7'-0"	27'-0⅛"	10.7
8'-0"	4'-0"	8"	5'-5"	3'-3"	4'-11⅜"	7'-0"	31'-0⅛"	12.7

** Dimensions and Concrete quantity assume gap between existing box culverts is 1'-6". See General Note about plan dimensions and details relative to the existing structure. Drop structure wall is included in Concrete quantity.*

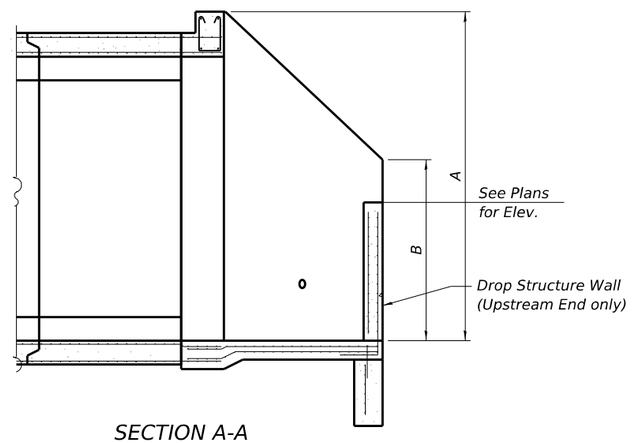

SECTION A-A

MODEL: Default
FILE NAME: P:\2018\180788\4 CADD - DWGS\4.4 Struct\Drawings\001-Multi-Cell Precast Concrete Box Culvert Apron End Section Upstream End Details.dgn
6/5/2025 1:02:32 PM

TWM ENGINEERING GEOSPATIAL SERVICES
TWM, INC. WWW.TWM-INC.COM
IL DESIGN FIRM LICENSE NO: 184-001220

USER NAME = jmesenbrink	DESIGNED - JMM	REVISED -		
	CHECKED - MJJ	REVISED -		
PLOT SCALE = 0.167 ' / in.	DRAWN - JMM	REVISED -		
PLOT DATE = 6/5/2025	CHECKED - MJJ	REVISED -		

ST. CLAIR COUNTY DEPARTMENT OF ROADS AND BRIDGES

MULTI-CELL PRECAST CONCRETE BOX CULVERT APRON END SECTIONS
UPSTREAM END OF CULVERTS NO. 2 & 3

SHEET 1 OF 6 SHEETS

F.A.U. RTE.	SECTION	COUNTY	TOTAL SHEETS	SHEET NO.
9330	24-00301-26-PW	ST. CLAIR	191	126
		CONTRACT NO.		
	ILLINOIS	FED. AID PROJECT		

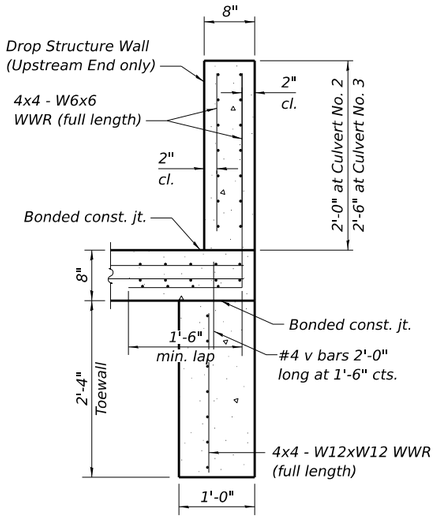

SECTION D-D

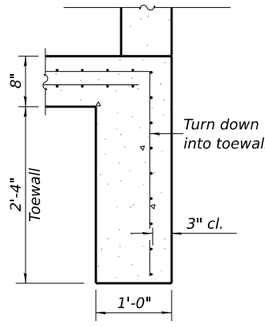

ALT. SECTION D-D

See Section D-D for Details not shown.

TOEWALL CONSTRUCTION SEQUENCE

1. Perform excavation and construct toewall.
2. Backfill accordingly and prepare bedding for box culvert end sections.
3. Construct remainder of box culvert end section.

Note:
If soil conditions permit, the toewall may be poured monolithically with the bottom slab of the end section using Alt. Section D-D subject to approval from the Engineer.

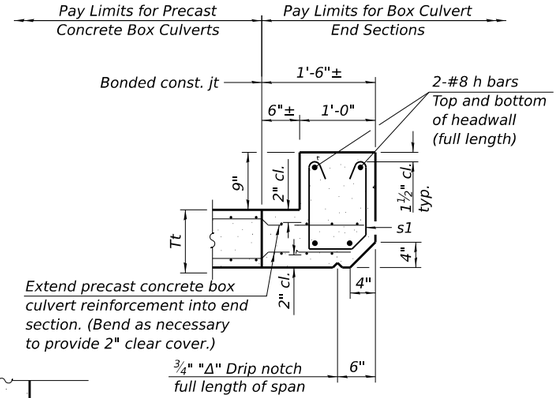

SECTION B-B

(Top slab at upstream end)

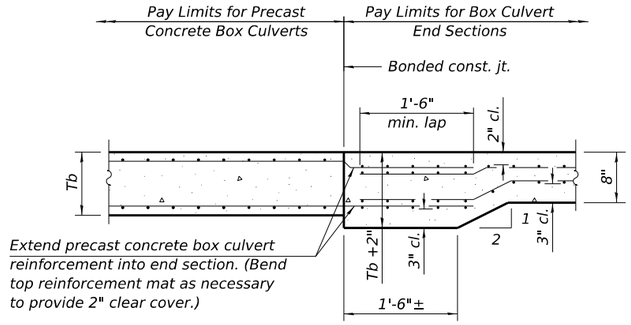

SECTION B-B

(Bottom slab)

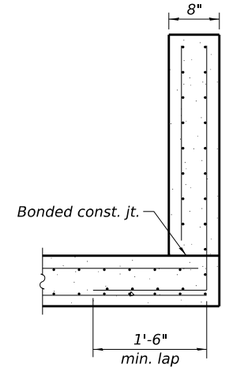

SECTION C-C

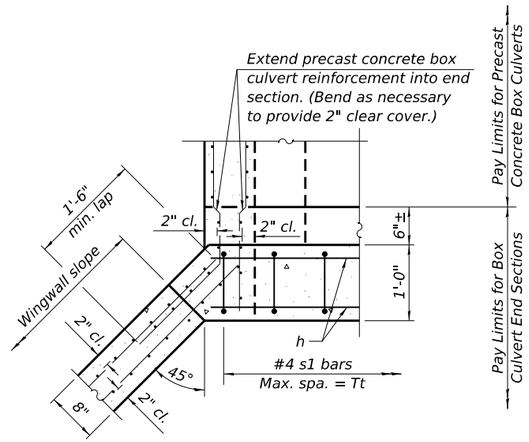

SECTION E-E

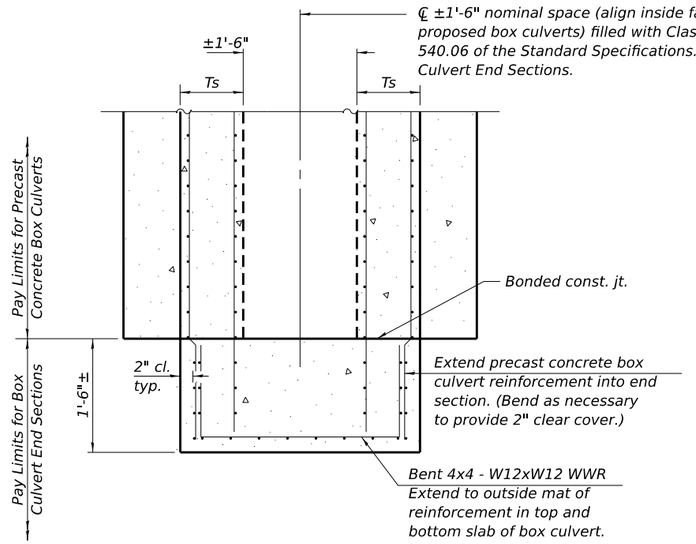

SECTION F-F

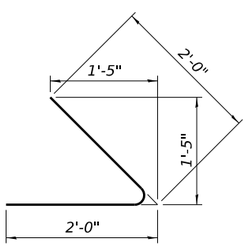

BAR h1

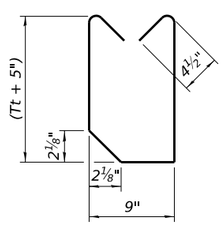

BAR s1

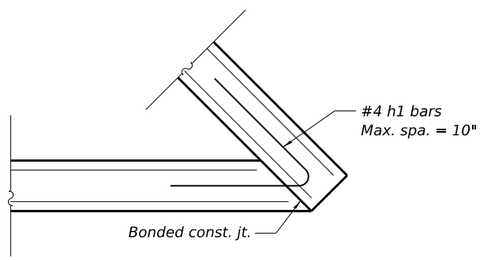

SECTION G-G

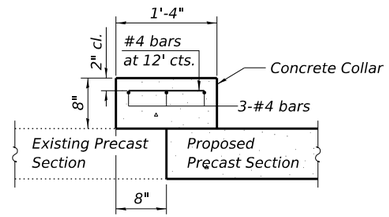

SECTION THRU CONNECTION COLLAR

MODEL: Default
FILE NAME: P:\2018\18078\04 CADD - DWG\4.4 Struc\Drawings\002-Multi-Cell Precast Concrete Box Culvert Apron End Section Upstream End.dgn
6/5/2025 1:04:13 PM

TWM ENGINEERING & GEOSPATIAL SERVICES
TWM, INC. WWW.TWM-INC.COM
IL DESIGN FIRM LICENSE NO: 184-001220

USER NAME = jmesenbrink	DESIGNED - JMM	REVISED -
	CHECKED - MJJ	REVISED -
PLOT SCALE = 0.167 ' / in.	DRAWN - JMM	REVISED -
PLOT DATE = 6/5/2025	CHECKED - MJJ	REVISED -

ST. CLAIR COUNTY DEPARTMENT OF ROADS AND BRIDGES

MULTI-CELL PRECAST CONCRETE BOX CULVERT APRON END SECTIONS
UPSTREAM END OF CULVERTS NO. 2 & 3

SHEET 2 OF 6 SHEETS

F.A.U. RTE.	SECTION	COUNTY	TOTAL SHEETS	SHEET NO.
9330	24-00301-26-PW	ST. CLAIR	191	127
		CONTRACT NO.		
	ILLINOIS	FED. AID PROJECT		

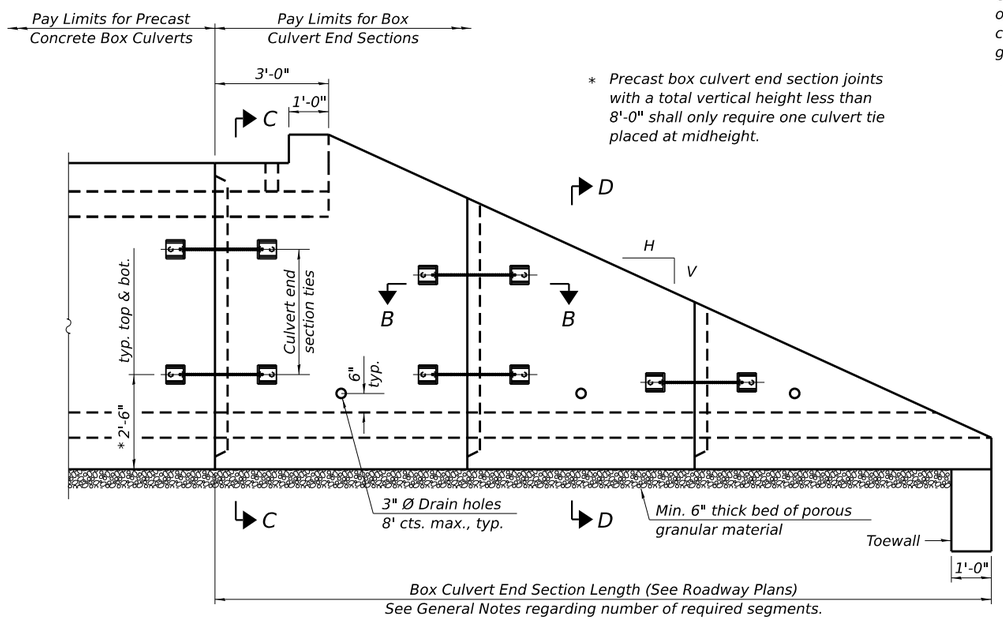

* Precast box culvert end section joints with a total vertical height less than 8'-0" shall only require one culvert tie placed at midheight.

ELEVATION

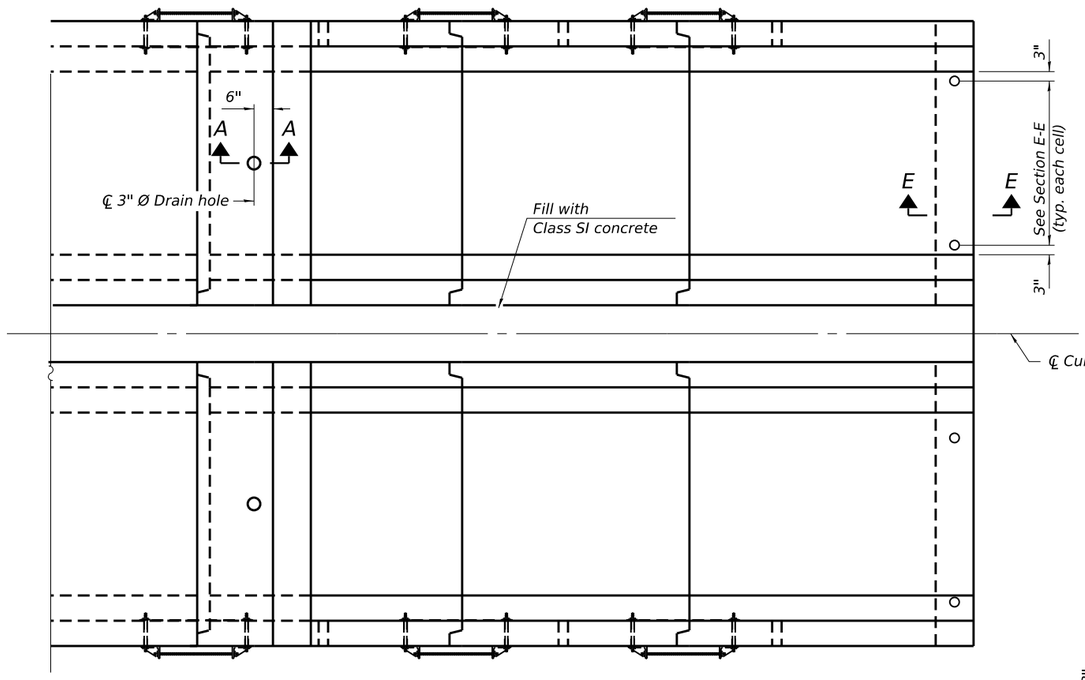

PLAN

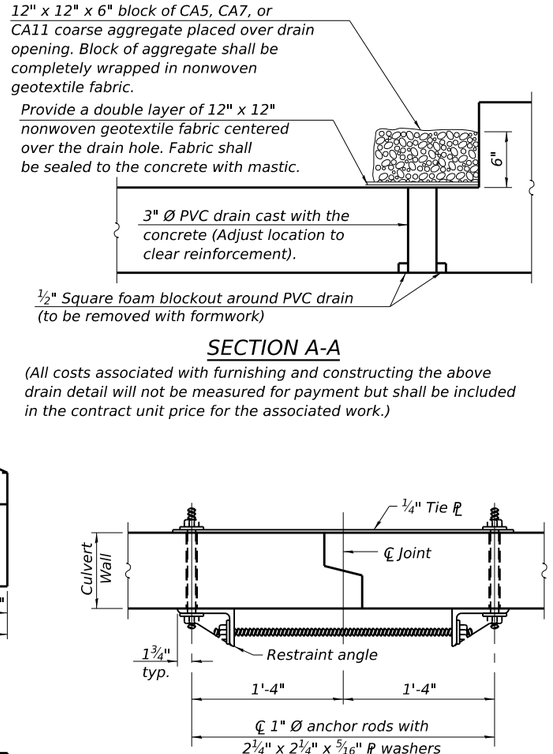

SECTION A-A

(All costs associated with furnishing and constructing the above drain detail will not be measured for payment but shall be included in the contract unit price for the associated work.)

SECTION B-B

(Showing end section tie details)

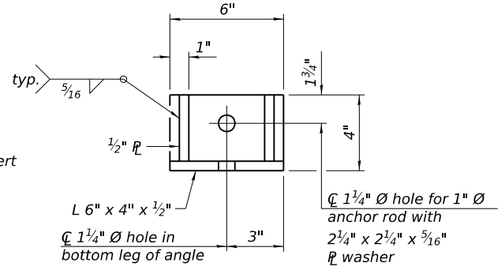

RESTRAINT ANGLE DETAIL

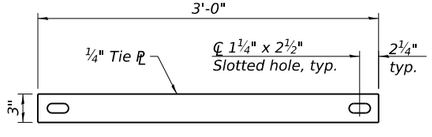

TIE PLATE DETAIL

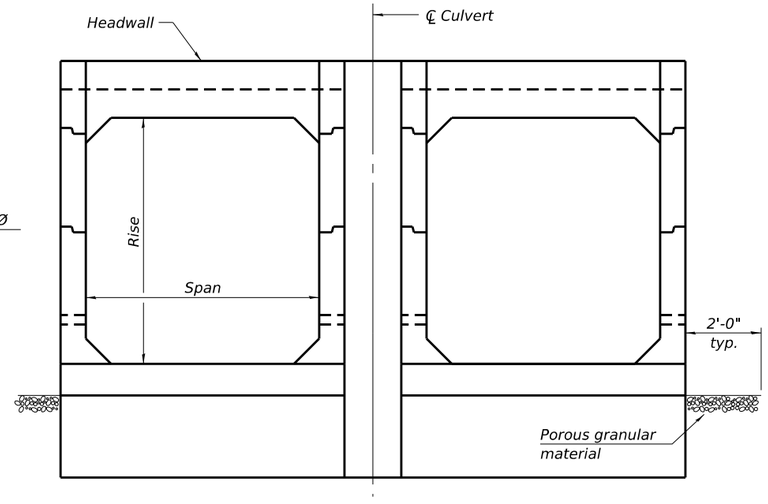

END VIEW

GENERAL NOTES

Box Culvert End Sections shall be constructed according to the requirements of Section 540 of the Standard Specifications except as modified herein. This work will be measured for payment as each, with each end of each culvert being one each. End sections will be paid for at the contract unit price per each for Box Culvert End Sections of the culvert number specified.

Typical box section dimensions, materials, and reinforcement details for Box Culvert End Sections shall be according to the requirements of ASTM C 1577 as required for the design of the portion of the culvert within the limits of Precast Concrete Box Culverts except as modified herein.

Number of segments shown in Elevation is for example only. Length and number of precast box sections required to construct Box Culvert End Sections shall be determined by the Contractor.

See roadway plans for embankment slope (V:H).

1" Ø anchor rods for the culvert ties shall conform to the requirements of ASTM F1554, Grade 105. Structural steel for tie plate and restraint angle shall conform to the requirements of Article 1006.04 of the Standard Specifications. All components of the culvert tie detail shall be galvanized according to the requirements of AASHTO M 111 or M 232 as applicable. 2¼" x 2¼" x 5/16" plate washers shall be provided under each nut required for the anchor rods. Anchor rods connecting precast sections shall be brought to a snug tight condition followed by an additional ½ turn on one of the nuts for anchor rods installed in the walls. Match marks shall be provided on the bolt and nut to verify relative rotation between the bolt and the nut. Holes in the walls for the culvert tie assembly may be drilled using core bits in lieu of using formed holes.

All costs associated with furnishing and installing or constructing the toewall and culvert ties will not be measured for payment but shall be included in the contract unit price for Box Culvert End Sections of the culvert number specified.

Drain holes shall conform to the requirements of Article 503.11 of the Standard Specifications unless noted otherwise.

Nonwoven geotextile fabric shall conform to the requirements of Article 1080.01. The minimum weight of the fabric shall be 6 oz. / sq. yd..

For end sections with traversable pipe grate systems, see grate detail sheet for required modifications.

The ±1'-6" nominal space (align inside faces of existing and proposed box culverts) between adjacent end sections shall be filled with Class SI concrete in accordance with Article 540.06 of the Standard Specifications. Cost included with Box Culvert End Sections.

Details for double cell box culvert shown. Details for other multi-cell box culverts similar.

Plan dimensions relative to the existing structure have been taken from existing plans and are subject to nominal construction variations. The Contractor shall field verify existing dimensions and details affecting new construction and make necessary approved adjustments prior to construction or ordering of materials. Such variations shall not be cause for additional compensation for a change in scope of the work, however, the Contractor will be paid for the quantity actually furnished at the unit price bid for the work.

See Sheet 2 of 6 for Section Thru Connection Collar at Joint between existing and proposed precast box culvert segments.

MODEL: Default
FILE NAME: P:\2018\18078\4 CADD - DWG\4.4 Struc\Drawings\003-Multi-Cell Precast Box Culvert Tapered End Sections Downstream End.dgn

TWM ENGINEERING & GEOSPATIAL SERVICES — TWM, INC. WWW.TWM-INC.COM — IL DESIGN FIRM LICENSE NO: 184-001220

USER NAME = jmesenbrink	DESIGNED - JMM	REVISED -	ST. CLAIR COUNTY DEPARTMENT OF ROADS AND BRIDGES	MULTI-CELL PRECAST BOX CULVERT TAPERED END SECTIONS DOWNSTREAM END OF CULVERTS NO. 2 & 3
	CHECKED - MJJ	REVISED -		SHEET 3 OF 6 SHEETS
PLOT SCALE = 0.167 ' / in.	DRAWN - JMM	REVISED -		
PLOT DATE = 3/21/2025	CHECKED - MJJ	REVISED -		

F.A.U. RTE.	SECTION	COUNTY	TOTAL SHEETS	SHEET NO.
9330	24-00301-26-PW	ST. CLAIR	191	128
		CONTRACT NO.		
	ILLINOIS	FED. AID PROJECT		

3/21/2025 8:50:38 AM

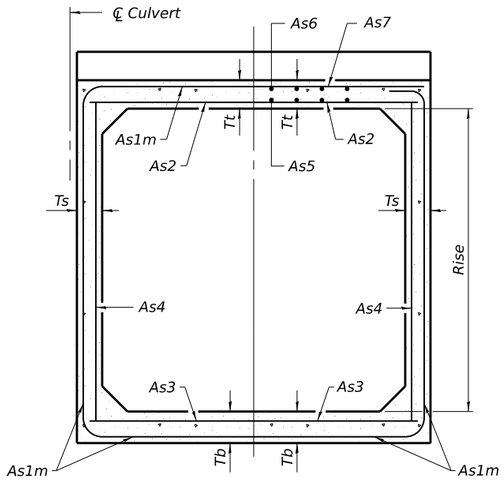

(Design Earth Cover ≥ 2 ft) (Design Earth Cover < 2 ft)

SECTION C-C

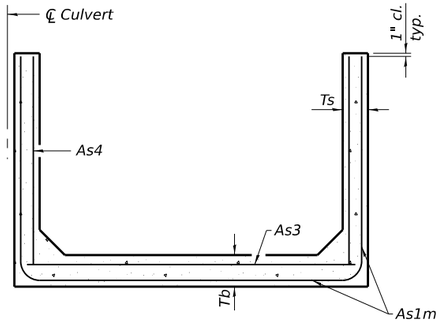

SECTION D-D

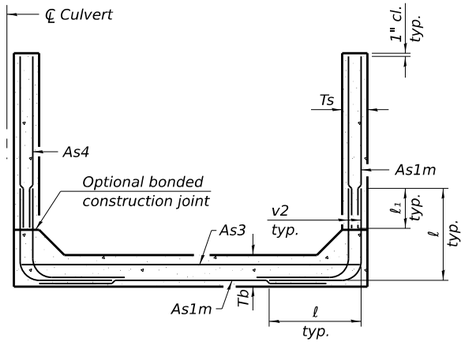

ALTERNATE SECTION D-D

As1m REINFORCEMENT

(in.²/ ft)

Ts (in.) \ Rise (ft)	2	3	4	5	6	7	8	9	10	11	12
4	0.19	0.17									
5	0.26	0.21	0.18								
6	0.22	0.26	0.23	0.22							
7	0.25	0.33	0.59	0.27	0.28						
8	0.40	0.35	0.43	0.39	0.36	0.34	0.40				
9	0.44	0.39	0.35	0.43	0.40	0.37	0.36	0.48			
10	0.48	0.42	0.38	0.47	0.44	0.41	0.38	0.42	0.56		
11	0.52	0.45	0.54	0.50	0.46	0.44	0.41	0.46	0.50	0.65	
12	0.55	0.49	0.58	0.54	0.50	0.48	0.45	0.46	0.46	0.61	0.75

(As1m reinforcement based upon welded wire reinforcement conforming to AASHTO M 55 or M 221).

ℓ1 DIMENSION

#3 bar = 2'-0"
#4 bar = 2'-8"
#5 bar = 3'-4"
#6 bar = 3'-11"

Notes:

Alternate Section D-D is provided to allow the Contractor the option of casting the bottom slab of the end section first followed by construction of the sidewalls using conventional forming methods. Shop drawings that detail slab thickness and reinforcement layout shall be submitted to the Engineer for review and approval when using Alternate Section D-D.

The size and spacing of the v2 bars shall provide a minimum reinforcement area along each face of the walls (in.²/ft.) equal to 1.10*(As1m). v2 bars may consist of #3 thru #6 size reinforcement bars and the longitudinal spacing shall not exceed the lesser of the wall thickness or 8 inches.

Bonded construction joints shall be prepared according to Article 503.09 of the Standard Specifications.

Sections C-C, D-D, and Headwall Elevation are symmetric about ℄ culvert through 180° rotation.

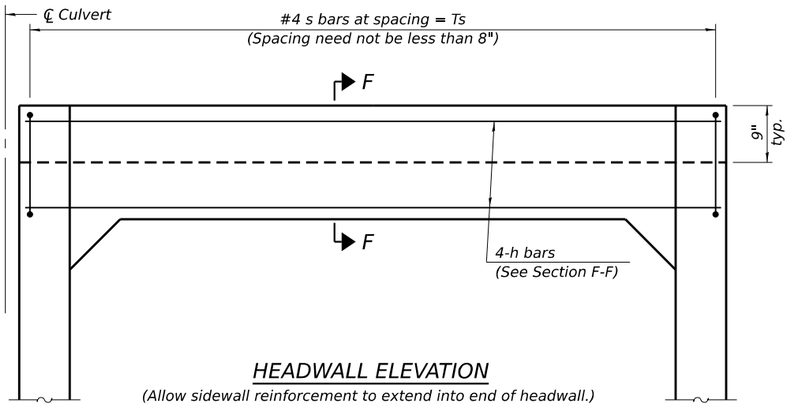

HEADWALL ELEVATION

(Allow sidewall reinforcement to extend into end of headwall.)

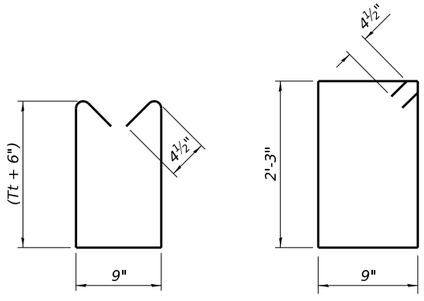

BAR s

BAR s1

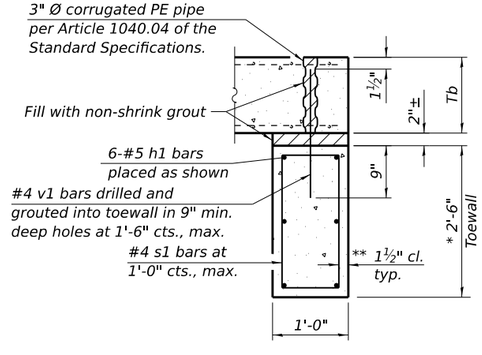

SECTION E-E

TOEWALL CONSTRUCTION SEQUENCE

1. Perform excavation and construct toewall.
2. Backfill according to the applicable paragraphs of Article 502.10 of the Standard Specifications and place bedding for precast box culvert end sections.
3. Set precast box culvert end section.
4. Drill and epoxy grout reinforcement in toewall in accordance with Section 584 of the Standard Specifications.
5. Pressure grout voids using non-shrink grout conforming to Section 1024 of the Standard Specifications.

* The Contractor may furnish a precast or cast-in-place toewall. The Contractor shall be responsible for the strength and stability of the precast toewall during handling. Additional lifting points may be required depending upon the length of the toewall or the Contractor may need to modify the design of the toewall for the proposed handling the method.

** If soil conditions permit, the sides of the toewall may be poured directly against the soil. The clear cover on the sides of the toewall shall be increased to 3" by increasing the thickness of the toewall.

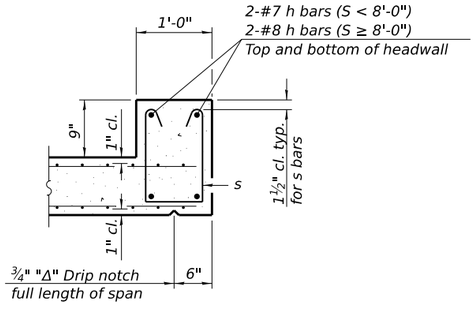

SECTION F-F

MCB-TES 5-15-2023

MODEL: Default
FILE NAME: P:\2018\18078\84 CADD - DWG\4.4 Struct\Drawings\004-Multi-Cell Precast Box Culvert Tapered End Sections Downstream End.dgn
3/21/2025 8:51:56 AM

TWM ENGINEERING GEOSPATIAL SERVICES — TWM, INC. WWW.TWM-INC.COM — IL DESIGN FIRM LICENSE NO: 184-001220

USER NAME = jmesenbrink	DESIGNED - JMM	REVISED -	ST. CLAIR COUNTY DEPARTMENT OF ROADS AND BRIDGES	MULTI-CELL PRECAST BOX CULVERT TAPERED END SECTIONS DOWNSTREAM END OF CULVERTS NO. 2 & 3
	CHECKED - MJJ	REVISED -		
PLOT SCALE = 0.167 ' / in.	DRAWN - JMM	REVISED -		SHEET 4 OF 6 SHEETS
PLOT DATE = 3/21/2025	CHECKED - MJJ	REVISED -		

F.A.U. RTE.	SECTION	COUNTY	TOTAL SHEETS	SHEET NO.
9330	24-00301-26-PW	ST. CLAIR	191	129
		CONTRACT NO.		
	ILLINOIS	FED. AID PROJECT		

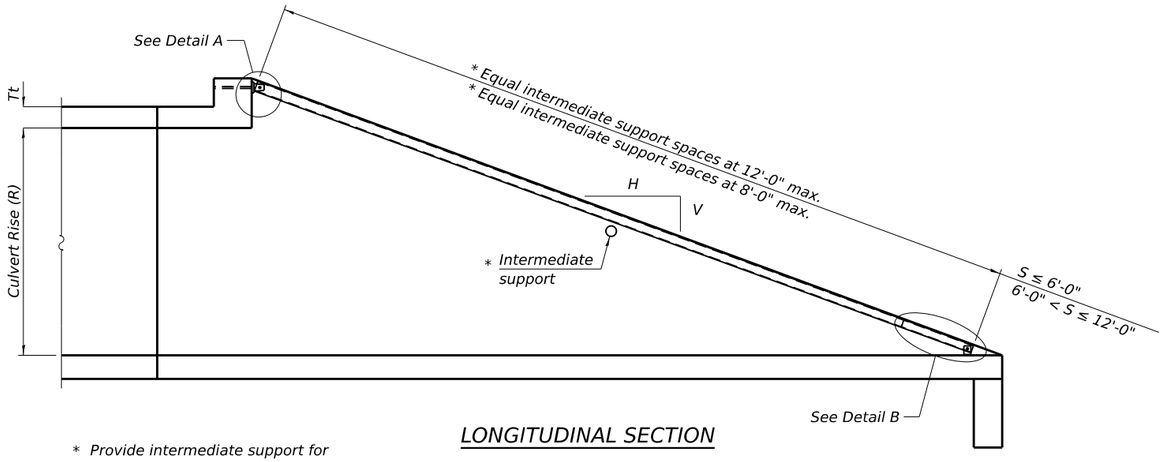

LONGITUDINAL SECTION

* Provide intermediate support for grate pipe lengths > 20'-0".

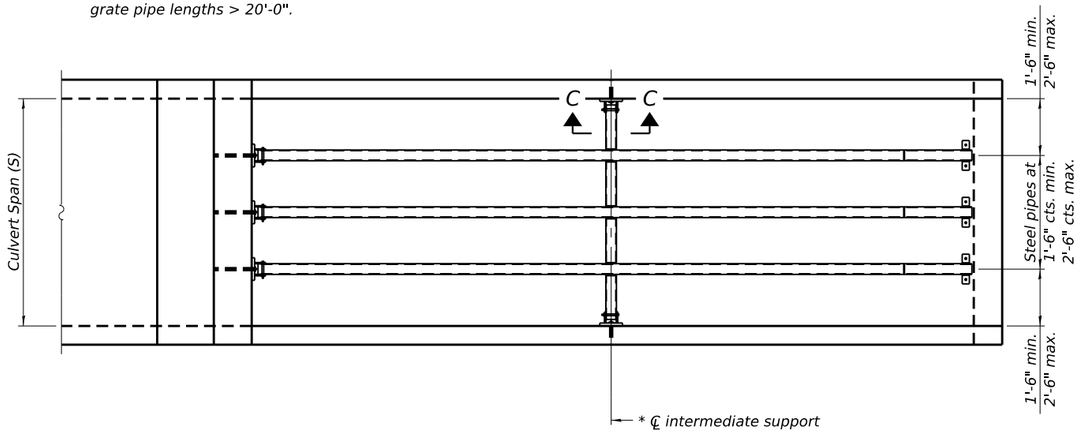

PLAN VIEW

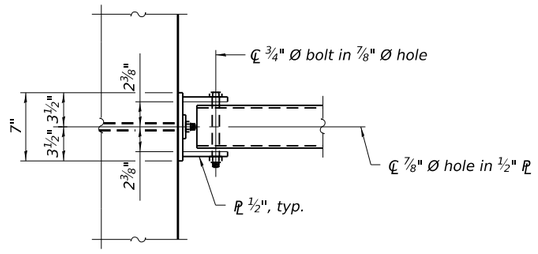

VIEW A-A

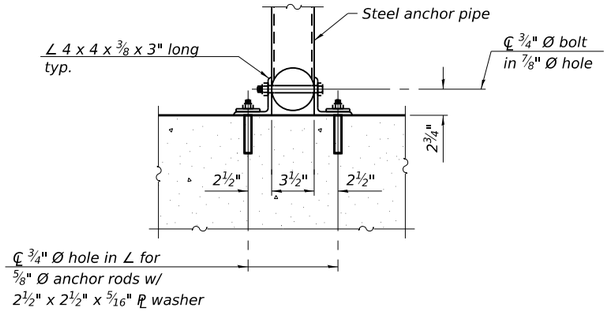

SECTION B-B

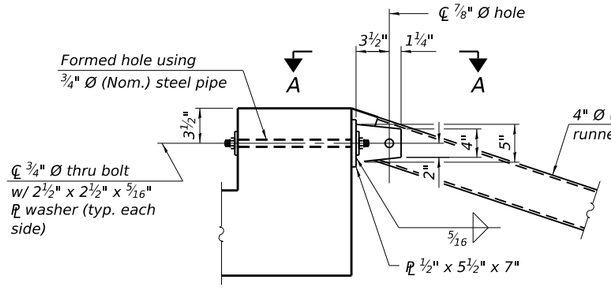

DETAIL A

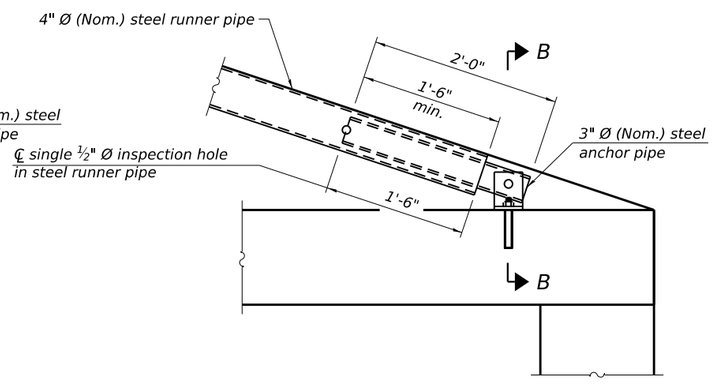

DETAIL B

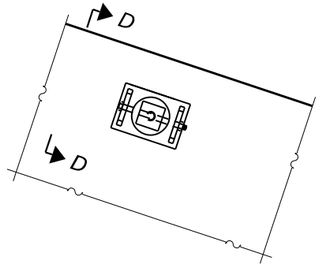

VIEW C-C

(See Detail A for dimensions and details not shown.)

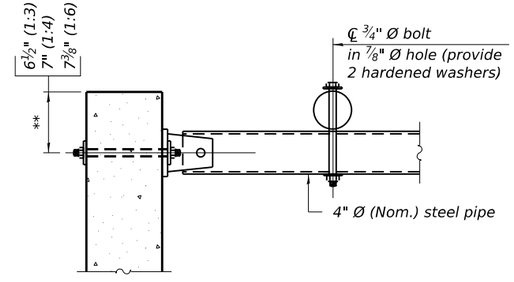

SECTION D-D

** *Measured perpendicular to top of culvert wall. In addition, formed hole shall be located a minimum of 6" measured horizontally from any vertical joints necessary for construction of the culvert end section.*

GENERAL NOTES

The minimum edge distance from the center of a hole to the free edge of a structural shape or plate shall be 1½" unless noted otherwise.

This standard shall only be used on concrete end sections not skewed more than ±15 degrees with roadway.

The Contractor may install the thru bolts using drilling and grouting in lieu of providing a formed hole using steel pipe. Installation shall be in accordance with Article 509.06 using a method that results in the annulus surrounding the bolt being completed filled with adhesive. The method of drilling shall not result in spalled concrete at the exit face. Epoxy grouted thru bolts shall be snug tightened followed by an additional ⅓ turn on the interior nut at final installation. Cost included with Traversable Pipe Grate.

TPGBC-ZS

5-15-2023

(Sheet 1 of 2)

MODEL: Default
FILE NAME: P:\2018\180788\4 CADD - DWG\4.4 StrucDrawings\005-Traversable Pipe Grate For Box Culverts Downstream End.dgn

3/21/2025 8:52:27 AM

TWM ENGINEERING GEOSPATIAL SERVICES — TWM, INC. WWW.TWM-INC.COM — IL DESIGN FIRM LICENSE NO: 184-001220

USER NAME =	jmesenbrink	DESIGNED -	JMM	REVISED -	
		CHECKED -	MJJ	REVISED -	
PLOT SCALE =	0.167 ' / in.	DRAWN -	JMM	REVISED -	
PLOT DATE =	3/21/2025	CHECKED -	MJJ	REVISED -	

ST. CLAIR COUNTY DEPARTMENT OF ROADS AND BRIDGES

TRAVERSABLE PIPE GRATE FOR BOX CULVERTS
DOWNSTREAM END OF CULVERTS NO. 2 & 3

SHEET 5 OF 6 SHEETS

F.A.U. RTE.	SECTION	COUNTY	TOTAL SHEETS	SHEET NO.
9330	24-00301-26-PW	ST. CLAIR	191	130
		CONTRACT NO.		
	ILLINOIS	FED. AID PROJECT		

PIPE-GRATE SCHEDULE FOR BOX CULVERT END SECTIONS

Precast Box Culvert Dimensions			Slope of End Section								
			1:3			1:4			1:6		
S (ft)	R (ft)	Tt (in)	Main Pipe No. / Length	Int. Support No. / Length	Total Length of Pipe	Main Pipe No. / Length	Int. Support No. / Length	Total Length of Pipe	Main Pipe No. / Length	Int. Support No. / Length	Total Length of Pipe
4	2	7.5	1 @ 8'-10"	N/A	8'-10"	1 @ 11'-7"	N/A	11'-7"	1 @ 17'-2"	N/A	17'-2"
4	2	5	1 @ 8'-2"	N/A	8'-2"	1 @ 10'-8"	N/A	10-8"	1 @ 15'-11"	N/A	15'-11"
4	3	7.5	1 @ 12'-0"	N/A	12'-0"	1 @ 15'-8"	N/A	15'-8"	1 @ 23'-3"	1 @ 3'-7"	26'-10"
4	3	5	1 @ 11'-4"	N/A	11'-4"	1 @ 14'-10"	N/A	14'-10"	1 @ 22'-0"	1 @ 3'-7"	25'-7"
4	4	7.5	1 @ 15'-2"	N/A	15'-2"	1 @ 19'-10"	1 @ 3'-7"	23'-5"	1 @ 29'-4"	2 @ 3'-7"	36'-3"
4	4	5	1 @ 14'-6"	N/A	14'-6"	1 @ 18'-11"	N/A	18'-11"	1 @ 28'-1"	2 @ 3'-7"	35'-3"
5	2	8	1 @ 8'-11"	N/A	8'-11"	1 @ 11'-9"	N/A	11'-9"	1 @ 17'-5"	N/A	17'-5
5	2	6	1 @ 8'-5"	N/A	8'-5"	1 @ 11'-1"	N/A	11'-1"	1 @ 16'-5"	N/A	16'-5"
5	3	8	1 @ 12'-1"	N/A	12'-1"	1 @ 15'-10"	N/A	15'-10"	1 @ 23'-6"	1 @ 4'-7"	28'-1"
5	3	6	1 @ 11'-7"	N/A	11'-7"	1 @ 15'-2"	N/A	15'-2"	1 @ 22'-6"	1 @ 4'-7"	27'-1"
5	4	8	1 @ 15'-3"	N/A	15'-3"	1 @ 20'-0"	1 @ 4'-7"	24'-7"	1 @ 29'-7"	2 @ 4'-7"	38'-9"
5	4	6	1 @ 14'-9"	N/A	14'-9"	1 @ 19'-3"	N/A	19'-3"	1 @ 28'-7"	2 @ 4'-7"	37'-9"
5	5	8	1 @ 18'-5"	N/A	18'-5"	1 @ 24'-1"	2 @ 4'-7"	33'-3"	1 @ 35'-8"	3 @ 4'-7"	49'-5"
5	5	6	1 @ 17'-11"	N/A	17'-11"	1 @ 23'-5"	1 @ 4'-7"	28'-0"	1 @ 34'-8"	2 @ 4'-7"	43'-10"
6	2	8	2 @ 8'-11"	N/A	17'-10"	2 @ 11'-9"	N/A	23'-6"	2 @ 17'-5"	N/A	34'-10"
6	2	7	2 @ 8'-8"	N/A	17'-4"	2 @ 11'-5"	N/A	22'-10"	2 @ 16'-11"	N/A	33'-10"
6	3	8	2 @ 12'-1"	N/A	24'-2"	2 @ 15'-10"	N/A	31'-8"	2 @ 23'-6"	1 @ 5'-7"	52'-7"
6	3	7	2 @ 11'-10"	N/A	23'-8"	2 @ 15'-6"	N/A	31'-0"	2 @ 23'-0"	1 @ 5'-7"	51'-7"
6	4	8	2 @ 15'-3"	N/A	30'-6"	2 @ 20'-0"	1 @ 5'-7"	45'-7"	2 @ 29'-7"	2 @ 5'-7"	70'-4"
6	4	7	2 @ 15'-0"	N/A	30'-0"	2 @ 19'-8"	1 @ 5'-7"	44'-11"	2 @ 29'-1"	2 @ 5'-7"	69'-4"
6	5	8	2 @ 18'-5"	N/A	36'-10"	2 @ 24'-1"	2 @ 5'-7"	59'-4"	2 @ 35'-8"	3 @ 5'-7"	88'-1"
6	5	7	2 @ 18'-2"	N/A	36'-4"	2 @ 23'-9"	2 @ 5'-7"	58'-8"	2 @ 35'-2"	2 @ 5'-7"	81'-6"
6	6	8	2 @ 21'-7"	1 @ 5'-7"	48'-9"	2 @ 28'-3"	2 @ 5'-7"	67'-8"	2 @ 41'-9"	3 @ 5'-7"	100'-3"
6	6	7	2 @ 21'-4"	1 @ 5'-7"	48'-3"	2 @ 27'-11"	2 @ 5'-7"	67'-0"	2 @ 41'-3"	3 @ 5'-7"	99'-3"
7	2	8	2 @ 8'-11"	N/A	17'-10"	2 @ 11'-9"	N/A	23'-6"	2 @ 17'-5"	N/A	34'-10"
7	3	8	2 @ 12'-1"	N/A	24'-2"	2 @ 15'-10"	N/A	31'-8"	2 @ 23'-6"	2 @ 6'-7"	60'-2"
7	4	8	2 @ 15'-3"	N/A	30'-6"	2 @ 20'-0"	2 @ 6'-7"	53'-2"	2 @ 29'-7"	3 @ 6'-7"	78'-11"
7	5	8	2 @ 18'-5"	N/A	36'-10"	2 @ 24'-1"	3 @ 6'-7"	67'-11"	2 @ 35'-8"	4 @ 6'-7"	97'-8"
7	6	8	2 @ 21'-7"	2 @ 6'-7"	56'-4"	2 @ 28'-3"	3 @ 6'-7"	76'-3"	2 @ 41'-9"	5 @ 6'-7"	116'-5"
7	7	8	2 @ 24'-9"	3 @ 6'-7"	69'-3"	2 @ 32'-4"	4 @ 6'-7"	91'-0"	2 @ 47'-10"	6 @ 6'-7"	135'-2"
8	2	8	3 @ 8'-11"	N/A	26'-9"	3 @ 11'-9"	N/A	35'-3"	3 @ 17'-5"	N/A	52'-3"
8	3	8	3 @ 12'-1"	N/A	36'-3"	3 @ 15'-10"	N/A	47'-6"	3 @ 23'-6"	2 @ 7'-7"	85'-8"
8	4	8	3 @ 15'-3"	N/A	45'-9"	3 @ 20'-0"	2 @ 7'-7"	75'-2"	3 @ 29'-7"	3 @ 7'-7"	111'-6"
8	5	8	3 @ 18'-5"	N/A	55'-3"	3 @ 24'-1"	3 @ 7'-7"	95'-0"	3 @ 35'-8"	4 @ 7'-7"	137'-4"
8	6	8	3 @ 21'-7"	2 @ 7'-7"	79'-11"	3 @ 28'-3"	3 @ 7'-7"	107'-6"	3 @ 41'-9"	5 @ 7'-7"	163'-2"
8	7	8	3 @ 24'-9"	3 @ 7'-7"	97'-0"	3 @ 32'-4"	4 @ 7'-7"	127'-4"	3 @ 47'-10"	6 @ 7'-7"	189'-0"
8	8	8	3 @ 27'-11"	3 @ 7'-7"	106'-6"	3 @ 36'-6"	4 @ 7'-7"	139'-10"	3 @ 53'-11"	6 @ 7'-7"	207'-3"
9	2	9	3 @ 9'-3"	N/A	27'-9"	3 @ 12'-1"	N/A	36'-3"	3 @ 17'-11"	N/A	53'-9"
9	3	9	3 @ 12'-4"	N/A	37'-0"	3 @ 16'-2"	N/A	48'-6"	3 @ 24'-0"	3 @ 8'-7"	97'-9"
9	4	9	3 @ 15'-6"	N/A	46'-6"	3 @ 20'-4"	2 @ 8'-7"	78'-2"	3 @ 30'-1"	3 @ 8'-7"	116'-0"
9	5	9	3 @ 18'-8"	N/A	56'-0"	3 @ 24'-5"	3 @ 8'-7"	99'-0"	3 @ 36'-2"	4 @ 8'-7"	142'-10"
9	6	9	3 @ 21'-10"	2 @ 8'-7"	82'-8"	3 @ 28'-7"	3 @ 8'-7"	111'-6"	3 @ 42'-3"	5 @ 8'-7"	169'-8"
9	7	9	3 @ 25'-0"	3 @ 8'-7"	100'-9"	3 @ 32'-8"	4 @ 8'-7"	132'-4"	3 @ 48'-4"	6 @ 8'-7"	196'-6"
9	8	9	3 @ 28'-2"	3 @ 8'-7"	110'-3"	3 @ 36'-10"	4 @ 8'-7"	144'-10"	3 @ 54'-5"	6 @ 8'-7"	214'-9"
9	9	9	3 @ 31'-4"	3 @ 8'-7"	119'-9"	3 @ 40'-11"	5 @ 8'-7"	165'-8"	3 @ 60'-6"	7 @ 8'-7"	241'-7"
10	2	10	3 @ 9'-6"	N/A	28'-6"	3 @ 12'-5"	N/A	37'-3"	3 @ 18'-5"	N/A	55'-3"
10	3	10	3 @ 12'-8"	N/A	38'-0"	3 @ 16'-6"	N/A	49'-6"	3 @ 24'-6"	3 @ 9'-7"	102'-3"
10	4	10	3 @ 15'-10"	N/A	47'-6"	3 @ 20'-8"	2 @ 9'-7"	81'-2"	3 @ 30'-7"	3 @ 9'-7"	120'-6"
10	5	10	3 @ 19'-0"	N/A	57'-0"	3 @ 24'-9"	3 @ 9'-7"	103'-0"	3 @ 36'-8"	4 @ 9'-7"	148'-4"
10	6	10	3 @ 22'-1"	2 @ 9'-7"	85'-5"	3 @ 28'-11"	3 @ 9'-7"	115'-6"	3 @ 42'-9"	5 @ 9'-7"	176'-2"
10	7	10	3 @ 25'-3"	3 @ 9'-7"	104'-6"	3 @ 33'-0"	4 @ 9'-7"	137'-4"	3 @ 48'-10"	6 @ 9'-7"	204'-0"
10	8	10	3 @ 28'-5"	3 @ 9'-7"	114'-0"	3 @ 37'-2"	4 @ 9'-7"	149'-10"	3 @ 54'-11"	6 @ 9'-7"	222'-3"
10	9	10	3 @ 31'-7"	4 @ 9'-7"	133'-1"	3 @ 41'-3"	5 @ 9'-7"	171'-8"	3 @ 61'-0"	7 @ 9'-7"	250'-1"
10	10	10	3 @ 34'-9"	4 @ 9'-7"	142'-7"	3 @ 45'-5"	5 @ 9'-7"	184'-2"	3 @ 67'-1"	8 @ 9'-7"	277'-11"
11	2	11	4 @ 9'-9"	N/A	39'-0"	3 @ 12'-9"	N/A	51'-0"	4 @ 18'-11"	N/A	75'-8"
11	3	11	4 @ 12'-11"	N/A	51'-8"	3 @ 16'-11"	N/A	67'-8"	4 @ 25'-0"	3 @ 10'-7"	131'-9"
11	4	11	4 @ 16'-1"	N/A	64'-4"	4 @ 21'-0"	2 @ 10'-7"	105'-2"	4 @ 31'-1"	3 @ 10'-7"	156'-1"
11	6	11	4 @ 22'-5"	2 @ 10'-7"	110'-10"	4 @ 29'-3"	3 @ 10'-7"	148'-9"	4 @ 43'-3"	5 @ 10'-7"	225'-11"
11	8	11	4 @ 28'-9"	3 @ 10'-7"	146'-9"	4 @ 37'-6"	4 @ 10'-7"	192'-4"	4 @ 55'-5"	6 @ 10'-7"	285'-2"
11	10	11	4 @ 35'-0"	4 @ 10'-7"	182'-4"	4 @ 45'-9"	5 @ 10'-7"	235'-11"	4 @ 67'-7"	8 @ 10'-7"	355'-0"
11	11	11	4 @ 38'-2"	4 @ 10'-7"	195'-0"	4 @ 49'-10"	6 @ 10'-7"	262'-10"	4 @ 73'-8"	9 @ 10'-7"	389'-11"
12	2	12	4 @ 10'-0"	N/A	40'-0"	4 @ 13'-1"	N/A	52'-4"	4 @ 19'-5"	N/A	77'-8"
12	3	12	4 @ 13'-2"	N/A	52'-8"	4 @ 17'-3"	N/A	69'-0"	4 @ 25'-6"	3 @ 11'-7"	136'-9"
12	4	12	4 @ 16'-4"	N/A	65'-4"	4 @ 21'-4"	2 @ 11'-7"	108'-6"	4 @ 31'-7"	4 @ 11'-7"	172'-8"
12	6	12	4 @ 22'-8"	2 @ 11'-7"	113'-10"	4 @ 29'-7"	3 @ 11'-7"	153'-1"	4 @ 43'-9"	5 @ 11'-7"	232'-11"
12	8	12	4 @ 29'-0"	3 @ 11'-7"	150'-9"	4 @ 37'-10"	4 @ 11'-7"	197'-8"	4 @ 55'-11"	7 @ 11'-7"	304'-9"
12	10	12	4 @ 35'-4"	4 @ 11'-7"	187'-8"	4 @ 46'-1"	5 @ 11'-7"	242'-3"	4 @ 68'-1"	8 @ 11'-7"	365'-0"
12	12	12	4 @ 41'-8"	5 @ 11'-7"	224'-7"	4 @ 54'-4"	6 @ 11'-7"	286'-10"	4 @ 80'-3"	10 @ 11'-7"	436'-10"

TPGBC-ZS

5-15-2023

(Sheet 2 of 2)

MODEL: Default
FILE NAME: P:\2018\1807884\4 CADD - DWG\4.4 Struct\Drawings\006-Traversable Pipe Grate For Box Culverts Section Details - Downstream End.dgn

3/21/2025 8:53:09 AM

TWM ENGINEERING GEOSPATIAL SERVICES
TWM, INC.
WWW.TWM-INC.COM
IL DESIGN FIRM LICENSE NO: 184-001220

USER NAME =	jmesenbrink	DESIGNED -	JMM	REVISED -	
		CHECKED -	MJJ	REVISED -	
PLOT SCALE =	0.167 ' / in.	DRAWN -	JMM	REVISED -	
PLOT DATE =	3/21/2025	CHECKED -	MJJ	REVISED -	

ST. CLAIR COUNTY DEPARTMENT OF ROADS AND BRIDGES

TRAVERSABLE PIPE GRATE FOR BOX CULVERTS
SECTION DETAILS - DOWNSTREAM END OF CULVERTS NO. 2 & 3

SHEET 6 OF 6 SHEETS

F.A.U. RTE.	SECTION	COUNTY	TOTAL SHEETS	SHEET NO.
9330	24-00301-26-PW	ST. CLAIR	191	131
		CONTRACT NO.		
	ILLINOIS	FED. AID PROJECT		

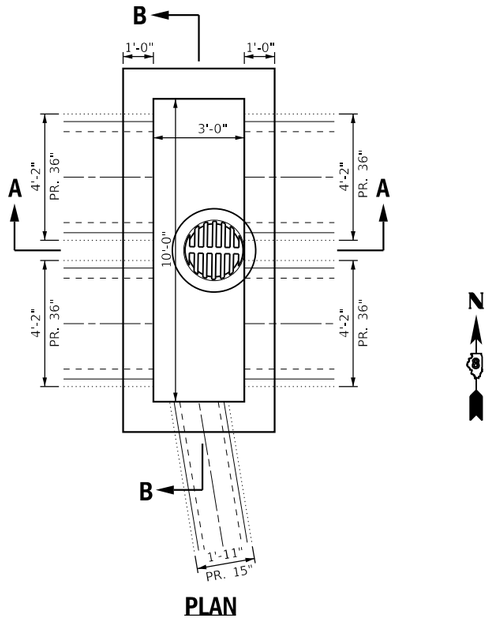

PLAN

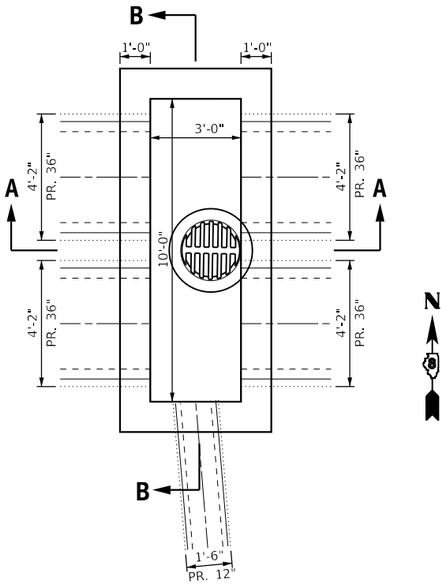

PLAN

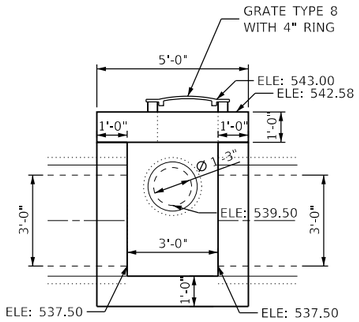

SECTION A-A

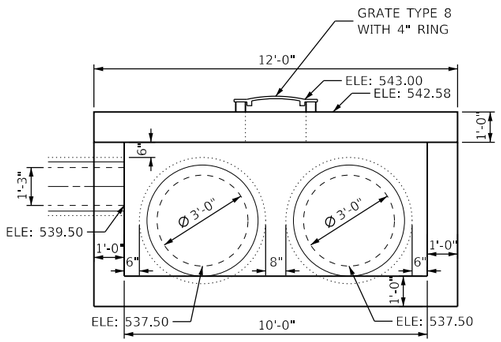

SECTION B-B

INLETS, SPECIAL NO. 1

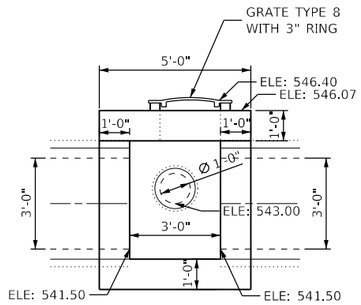

SECTION A-A

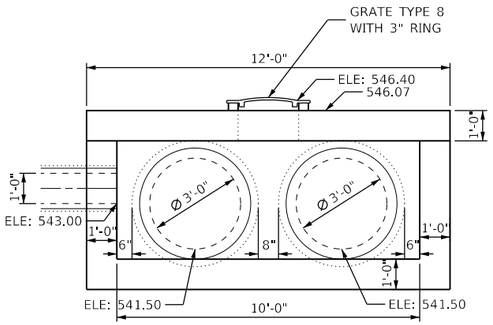

SECTION B-B

INLETS, SPECIAL NO. 2

MODEL: Default
FILE NAME: P:\2018\180788\04 CADD - DWG\4.7 Tran\CADD Sheets\Federal\180788A-sht-enfscdtl-Hdts.dgn

TWM ENGINEERING & GEOSPATIAL SERVICES	TWM, INC. WWW.TWM-INC.COM IL DESIGN FIRM LICENSE NO: 184-001220	USER NAME = efisher	DESIGNED - EKF	REVISED -	ST. CLAIR COUNTY DEPARTMENT OF ROADS AND BRIDGES	MISCELLANEOUS DETAILS
			DRAWN - EKF/KDD	REVISED -		
		PLOT SCALE = 5.0000 ' / in.	CHECKED - JWS	REVISED -		SCALE: N.T.S. SHEET 1 OF 3 SHEETS STA. TO STA.
		PLOT DATE = 6/17/2025	DATE - 06/2025	REVISED -		

F.A.U. RTE.	SECTION	COUNTY	TOTAL SHEETS	SHEET NO.
9330	24-00301-26-PW	ST. CLAIR	191	132
		CONTRACT NO. 97872		
		ILLINOIS	FED. AID PROJECT	

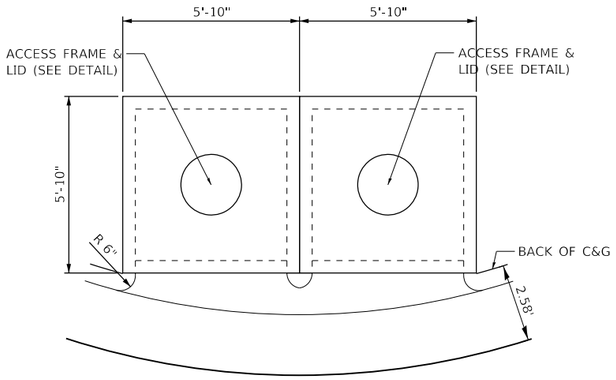

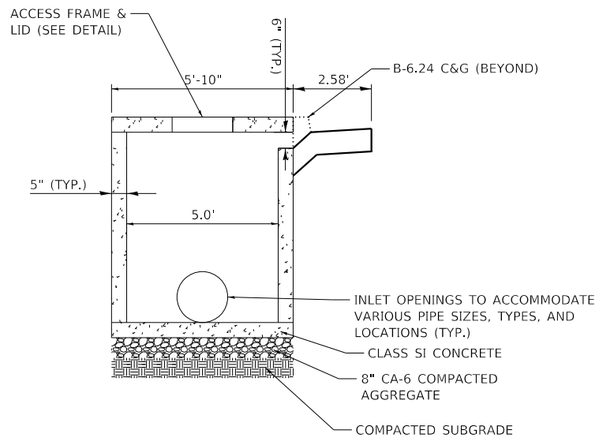

INLETS, SPECIAL, NO. 3

DOUBLE OPEN THROAT INLET WITH 1 OPENING

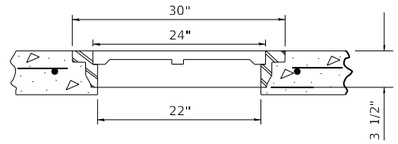

ACCESS FRAME AND LID

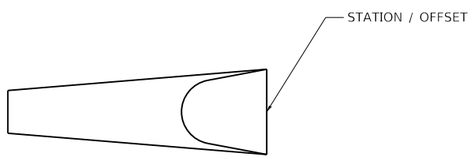

PRECAST REINFORCED CONCRETE FLARED END SECTION

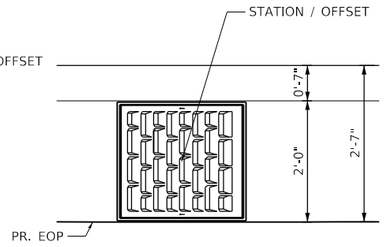

TYPE 24 FRAME AND GRATE

TOS = AT GUTTER FLOW LINE

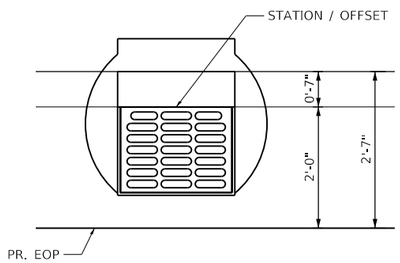

TYPE 3 FRAME AND GRATE

TOS = AT GUTTER FLOW LINE

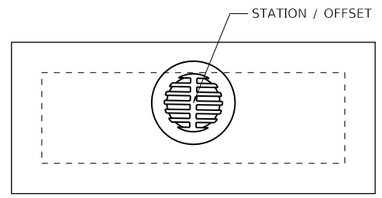

INLETS, SPECIAL, NO. 1 AND NO. 2

TOS = AT GRATE FLOW LINE

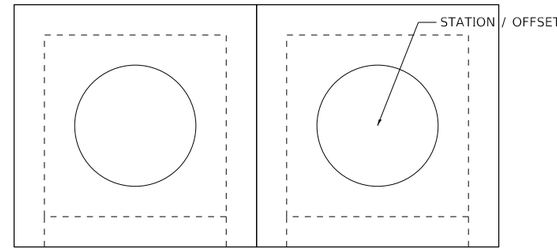

INLETS, SPECIAL, NO. 3

TOS = AT CENTER OF LID

DRAINAGE CALLOUTS

MODEL: Default
FILE NAME: P:\2018\180788\4 CADD - DWG\4.7 Tran\CADD Sheets\Federal\180788A-sht-miscdtl-callouts.dgn

TWM ENGINEERING & GEOSPATIAL SERVICES	TWM, INC. WWW.TWM-INC.COM IL DESIGN FIRM LICENSE NO: 184-001220	USER NAME = efisher	DESIGNED - EKF	REVISED -	ST. CLAIR COUNTY DEPARTMENT OF ROADS AND BRIDGES	MISCELLANEOUS DETAILS	F.A.U. RTE. 9330	SECTION 24-00301-26-PW	COUNTY ST. CLAIR	TOTAL SHEETS 191	SHEET NO. 133
			DRAWN - EKF/KDD	REVISED -					CONTRACT NO. 97872		
		PLOT SCALE = 5.0000 ' / in.	CHECKED - JWS	REVISED -							
		PLOT DATE = 6/17/2025	DATE - 06/2025	REVISED -		SCALE: N.T.S. SHEET 2 OF 3 SHEETS STA. TO STA.			ILLINOIS FED. AID PROJECT		

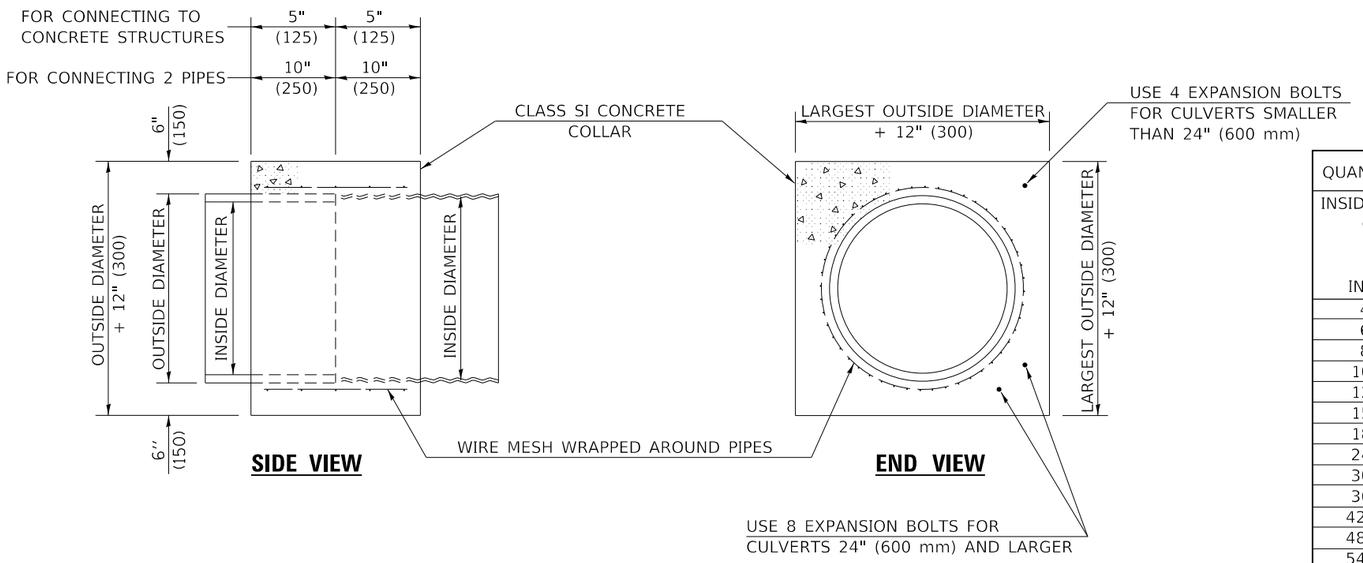

QUANTITIES FOR:	CONCRETE PIPES	METAL PIPES
INSIDE DIAMETER OF PIPE INCH (mm)	ESTIMATED CLASS SI CONCRETE REQUIRED CU.YD. (m^3)	ESTIMATED CLASS SI CONCRETE REQUIRED CU.YD. (m^3)
4" (100)	0.14 (0.11)	0.14 (0.11)
6" (150)	0.16 (0.12)	0.16 (0.12)
8" (200)	0.19 (0.14)	0.19 (0.14)
10" (250)	0.22 (0.17)	0.22 (0.17)
12" (300)	0.25 (0.19)	0.25 (0.19)
15" (375)	0.30 (0.23)	0.30 (0.23)
18" (450)	0.35 (0.27)	0.35 (0.27)
24" (600)	0.45 (0.35)	0.45 (0.35)
30" (750)	0.57 (0.43)	0.57 (0.43)
36" (900)	0.69 (0.53)	0.69 (0.53)
42" (1050)	0.83 (0.63)	0.83 (0.63)
48" (1200)	0.97 (0.74)	0.97 (0.74)
54" (1350)	1.12 (0.86)	1.12 (0.86)
60" (1500)	1.28 (0.98)	1.28 (0.98)

GENERAL NOTES

1. CLASS SI CONCRETE SHALL BE USED THROUGHOUT.
2. WHEN CONCRETE COLLARS ARE USED TO CONNECT PIPES OF DIFFERENT OUTSIDE DIAMETERS, THE CONCRETE COLLAR SHALL BE FORMED USING THE LARGEST OUTSIDE DIAMETER (SEE END VIEW).
3. THE WIRE MESH SHALL WEIGH NOT LESS THAN 54#/100 SQ. FT. (2.63 kg/m).
4. WHEN CONCRETE COLLARS ARE CONSTRUCTED ADJACENT TO AN EXISTING CONCRETE STRUCTURE (HEADWALLS, ETC.) EXPANSION BOLTS, SHALL BE USED AND WILL BE PAID FOR AT THE CONTRACT UNIT PRICE, EACH, FOR EXPANSION BOLTS OF THE SIZE SPECIFIED IN THE PLANS.
5. CONCRETE COLLARS WILL BE PAID FOR AT THE CONTRACT UNIT PRICE, PER CUBIC YARD (CUBIC METER), FOR CONCRETE COLLARS INCLUDING ALL MATERIAL, REINFORCEMENT BARS AND LABOR SPECIFIED TO COMPLETE THE WORK IN PLACE.

PIPE CULVERT EXTENSION COLLAR

MODEL: Default
FILE NAME: P:\2018\180788\4 CADD - DWG\4.7 Tran\CADD Sheets\Federal\180788A-stt-enlccdtl-collar.dgn

TWM ENGINEERING & GEOSPATIAL SERVICES
TWM, INC.
WWW.TWM-INC.COM
IL DESIGN FIRM LICENSE NO: 184-001220

USER NAME = efisher	DESIGNED - EKF	REVISED -
	DRAWN - EKF/KDD	REVISED -
PLOT SCALE = 40.0000 ' / in.	CHECKED - JWS	REVISED -
PLOT DATE = 6/17/2025	DATE - 06/2025	REVISED -

ST. CLAIR COUNTY DEPARTMENT OF ROADS AND BRIDGES

MISCELLANEOUS DETAILS

SCALE: N.T.S. | SHEET 3 OF 3 SHEETS | STA. | TO STA.

F.A.U. RTE.	SECTION	COUNTY	TOTAL SHEETS	SHEET NO.
9330	24-00301-26-PW	ST. CLAIR	191	134
		CONTRACT NO. 97872		
	ILLINOIS	FED. AID PROJECT		

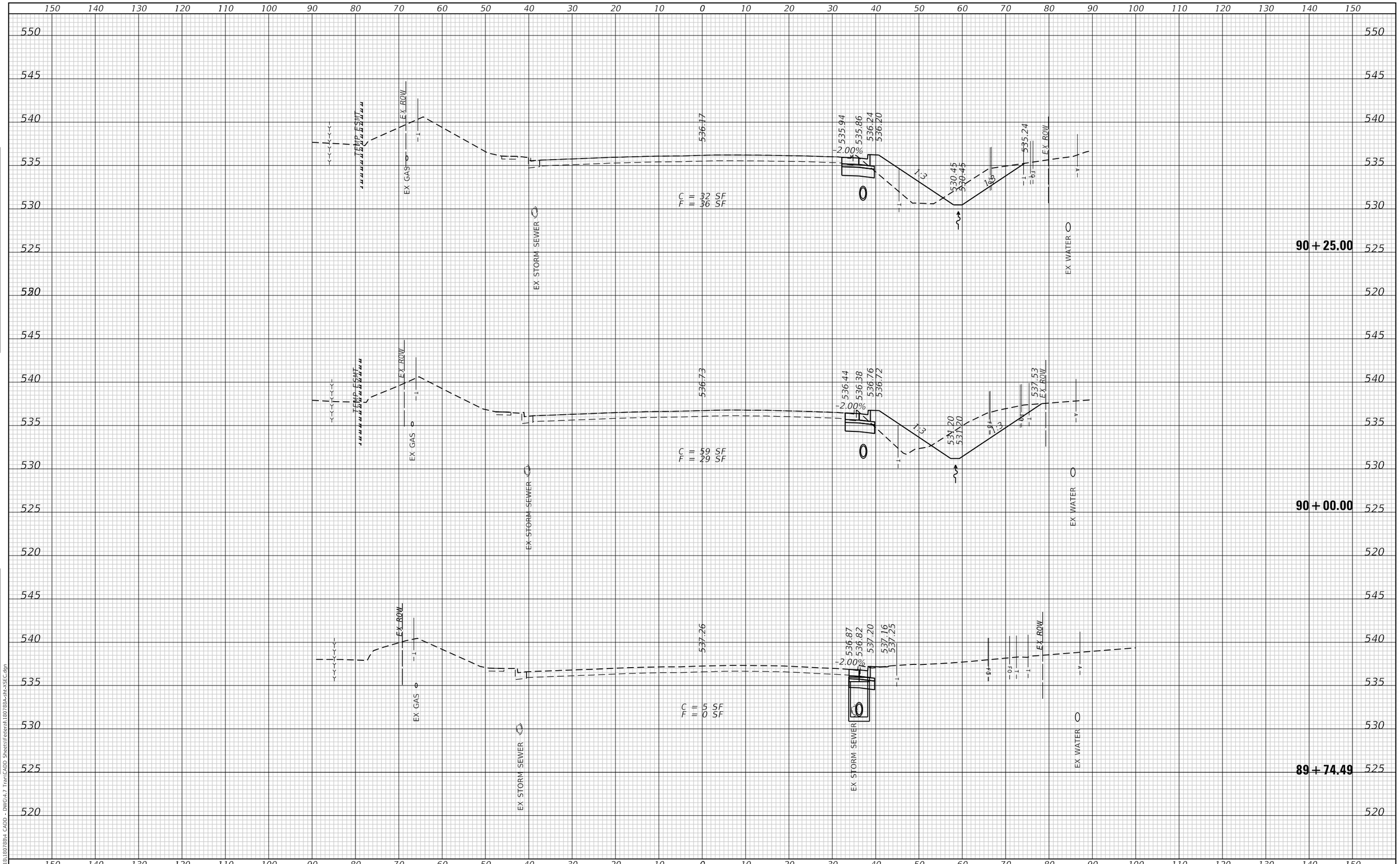

FINAL SURVEY	SURVEYED		BY	DATE							
	PLOTTED										
	TEMPLATE										
NOTE BOOK	AREAS										
NO.	AREAS CHECKED										

ORIGINAL SURVEY	SURVEYED		BY	DATE							
	PLOTTED										
	TEMPLATE										
NOTE BOOK	AREAS										
NO.	AREAS CHECKED										

MODEL: Default
FILE NAME: P:\2018\180788\4 CADD - DWG\4.7 Tran\CADD Sheets\Federal\180788A-sht-XSEC.dgn

TWM ENGINEERING & GEOSPATIAL SERVICES

TWM, INC.
WWW.TWM-INC.COM
IL DESIGN FIRM LICENSE NO: 184-001220

USER NAME = efisher	DESIGNED - EKF	REVISED -	
	DRAWN - EKF/KDD	REVISED -	
PLOT SCALE = 20.0000 ' / in.	CHECKED - JWS	REVISED -	
PLOT DATE = 6/17/2025	DATE - 06/2025	REVISED -	

ST. CLAIR COUNTY DEPARTMENT OF ROADS AND BRIDGES

CROSS SECTIONS

SCALE: 1"=10' | SHEET 1 OF 57 SHEETS | STA. 89+74.49 TO STA. 90+25.00

F.A.U. RTE.	SECTION	COUNTY	TOTAL SHEETS	SHEET NO.
9330	24-00301-26-PW	ST. CLAIR	191	135
		CONTRACT NO. 97872		
		ILLINOIS	FED. AID PROJECT	

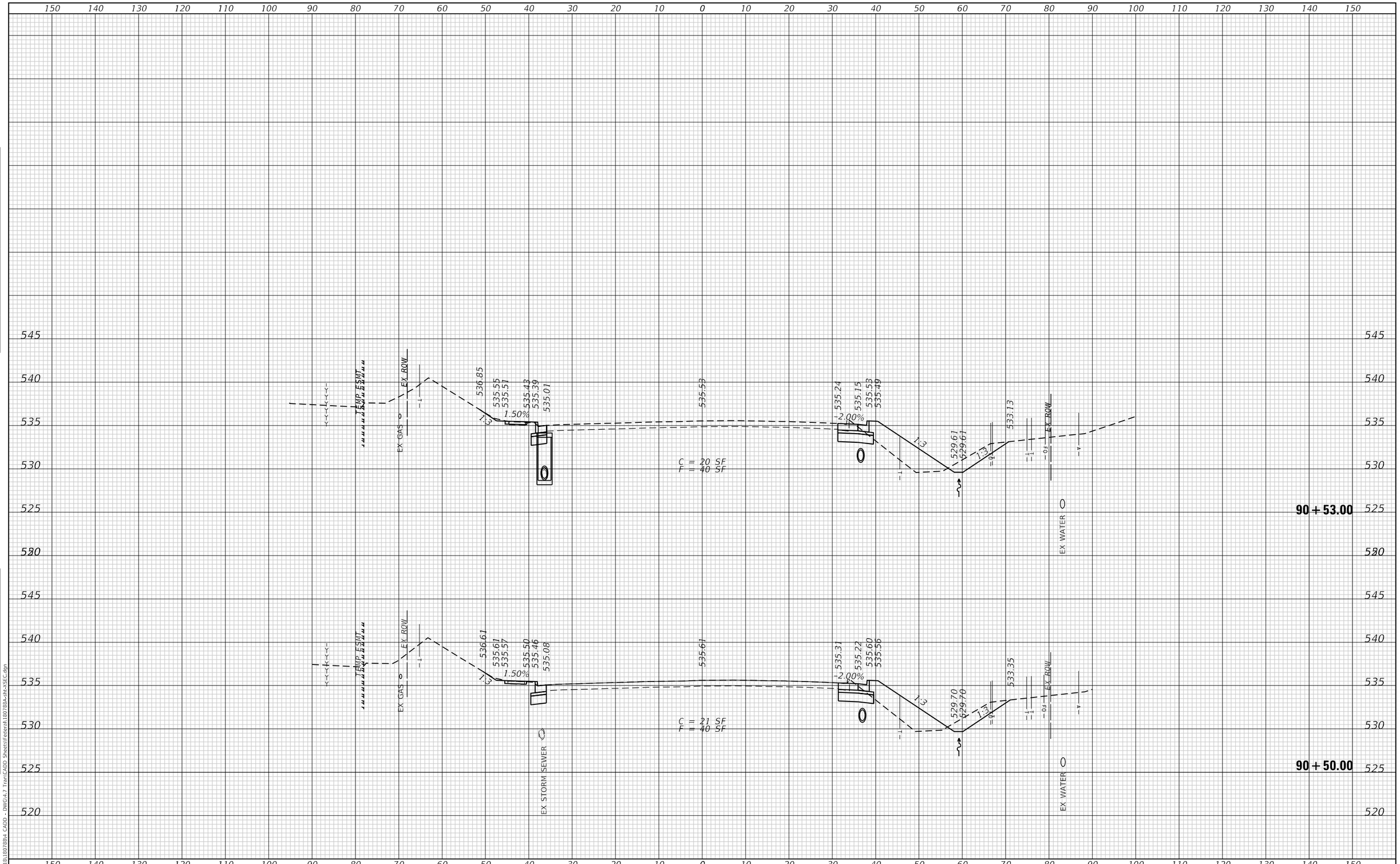

TWM, INC. WWW.TWM-INC.COM	USER NAME = efisher	DESIGNED - EKF	REVISED -	ST. CLAIR COUNTY DEPARTMENT OF ROADS AND BRIDGES	CROSS SECTIONS
ENGINEERING GEOSPATIAL SERVICES		DRAWN - EKF/KDD	REVISED -		
IL DESIGN FIRM LICENSE NO: 184-001220	PLOT SCALE = 20.0000 ' / in.	CHECKED - JWS	REVISED -		
	PLOT DATE = 6/17/2025	DATE - 06/2025	REVISED -		SCALE: 1"=10' SHEET 2 OF 57 SHEETS STA. 90+50.00 TO STA. 90+53.00

F.A.U. RTE.	SECTION	COUNTY	TOTAL SHEETS	SHEET NO.
9330	24-00301-26-PW	ST. CLAIR	191	136
		CONTRACT NO. 97872		
		ILLINOIS	FED. AID PROJECT	

MODEL: Default
FILE NAME: P:\2018\180788\4 CADD - DWG\4.7 Tran\CADD Sheets\Federal\180788A-sht-XSEC.dgn

TWM ENGINEERING & GEOSPATIAL SERVICES	TWM, INC. WWW.TWM-INC.COM IL DESIGN FIRM LICENSE NO: 184-001220	USER NAME = efisher	DESIGNED - EKF	REVISED -	ST. CLAIR COUNTY DEPARTMENT OF ROADS AND BRIDGES
			DRAWN - EKF/KDD	REVISED -	
		PLOT SCALE = 20.0000 ' / in.	CHECKED - JWS	REVISED -	
		PLOT DATE = 6/17/2025	DATE - 06/2025	REVISED -	

CROSS SECTIONS

SCALE: 1"=10' | SHEET 3 OF 57 SHEETS | STA. 90+75.00 TO STA. 91+00.00

F.A.U. RTE.	SECTION	COUNTY	TOTAL SHEETS	SHEET NO.
9330	24-00301-26-PW	ST. CLAIR	191	137
		CONTRACT NO. 97872		
		ILLINOIS	FED. AID PROJECT	

MODEL: Default
FILE NAME: P:\2018\180788\4 CADD - DWG\4.7 Tran\CADD Sheets\Federal\180788A-sht-XSEC.dgn

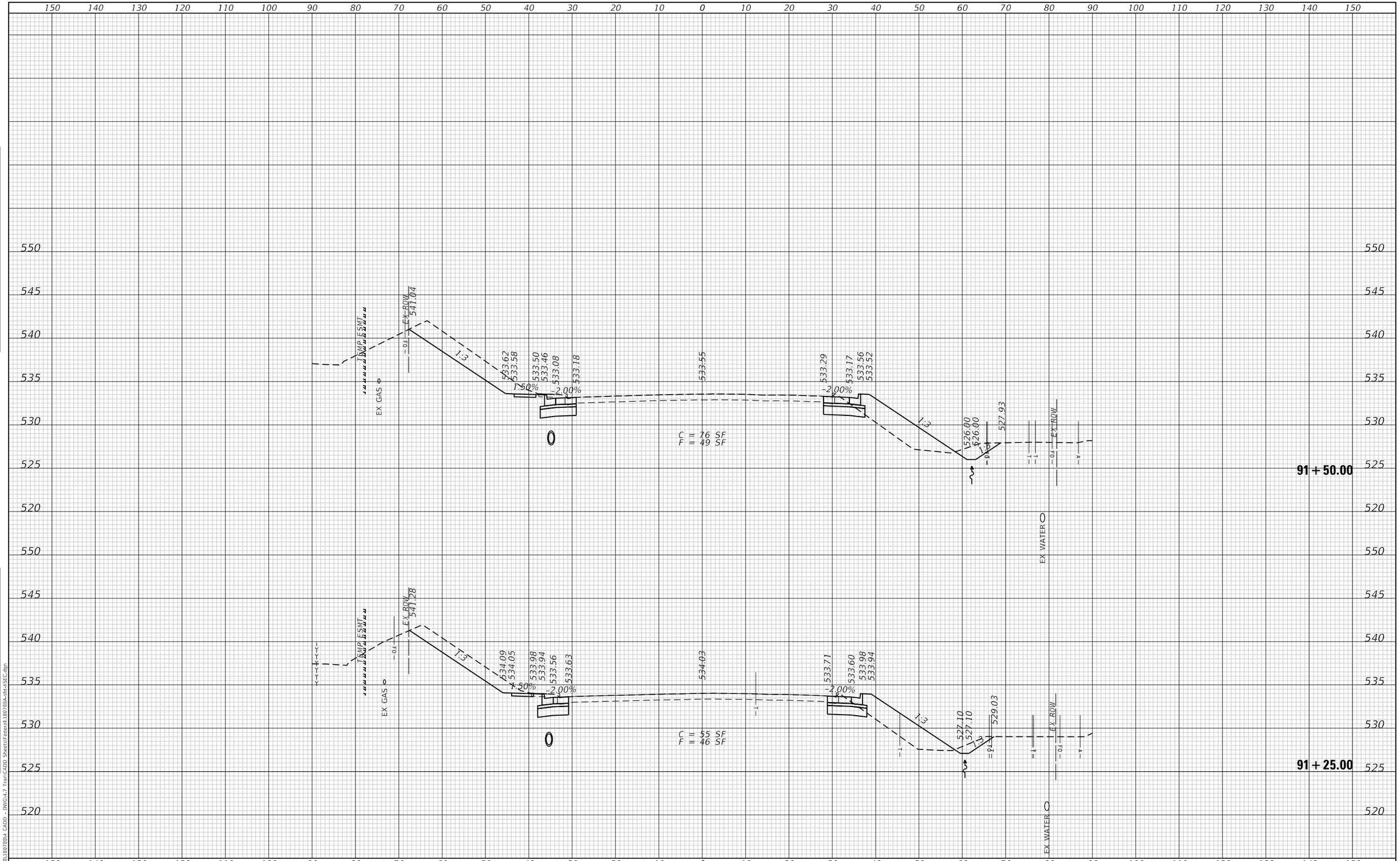

TWM ENGINEERING GEOSPATIAL SERVICES	TWM, INC. WWW.TWM-INC.COM IL DESIGN FIRM LICENSE NO: 184-001220	USER NAME = efisher	DESIGNED - EKF	REVISED -	
			DRAWN - EKF/KDD	REVISED -	
		PLOT SCALE = 20.0000 ' / in.	CHECKED - JWS	REVISED -	
		PLOT DATE = 6/17/2025	DATE - 06/2025	REVISED -	

ST. CLAIR COUNTY DEPARTMENT OF ROADS AND BRIDGES

CROSS SECTIONS

SCALE: 1"=10' | SHEET 4 OF 57 SHEETS | STA. 91+25.00 TO STA. 91+50.00

F.A.U. RTE.	SECTION	COUNTY	TOTAL SHEETS	SHEET NO.
9330	24-00301-26-PW	ST. CLAIR	191	138
		CONTRACT NO. 97872		
		ILLINOIS	FED. AID PROJECT	

FINAL SURVEY: SURVEYED, PLOTTED, TEMPLATE, AREAS, AREAS CHECKED — NOTE BOOK NO. — BY — DATE

ORIGINAL SURVEY: SURVEYED, PLOTTED, TEMPLATE, AREAS, AREAS CHECKED — NOTE BOOK NO. — BY — DATE

MODEL: Default
FILE NAME: P:\2018\180788\4 CADD - DWG\4.7 Tran\CADD Sheets\Federal\180788A-sht-XSEC.dgn

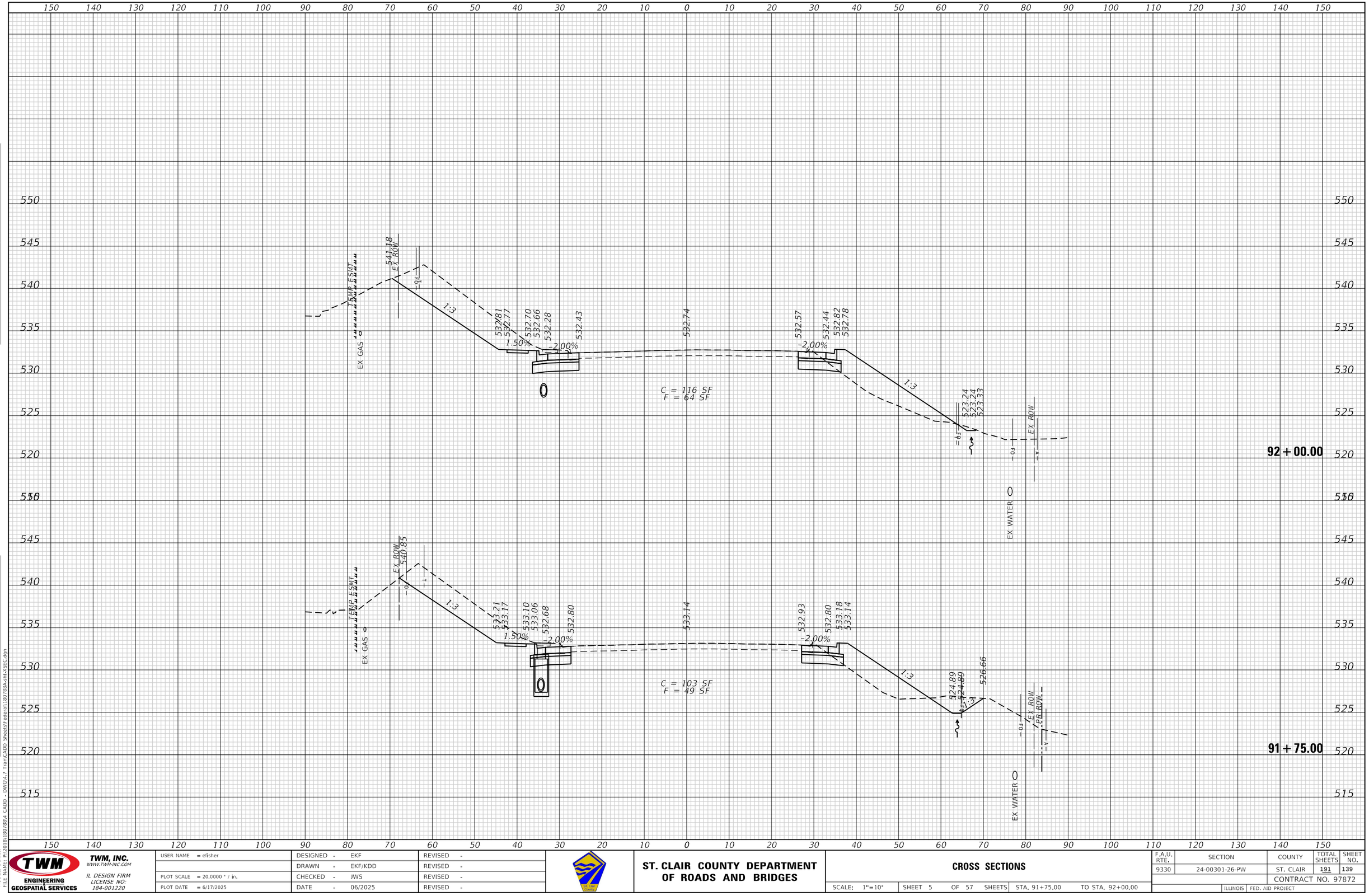

TWM ENGINEERING GEOSPATIAL SERVICES	TWM, INC. WWW.TWM-INC.COM IL DESIGN FIRM LICENSE NO: 184-001220	USER NAME = efisher	DESIGNED - EKF	REVISED -	ST. CLAIR COUNTY DEPARTMENT OF ROADS AND BRIDGES
			DRAWN - EKF/KDD	REVISED -	
		PLOT SCALE = 20.0000 ' / in.	CHECKED - JWS	REVISED -	
		PLOT DATE = 6/17/2025	DATE - 06/2025	REVISED -	

CROSS SECTIONS

SCALE: 1"=10' | SHEET 5 OF 57 SHEETS | STA. 91+75.00 | TO STA. 92+00.00

F.A.U. RTE.	SECTION	COUNTY	TOTAL SHEETS	SHEET NO.
9330	24-00301-26-PW	ST. CLAIR	191	139
		CONTRACT NO. 97872		
		ILLINOIS	FED. AID PROJECT	

FINAL SURVEY / ORIGINAL SURVEY — NOTE BOOK — NO. — BY — DATE — SURVEYED — PLOTTED — TEMPLATE — AREAS — AREAS CHECKED

MODEL: Default
FILE NAME: P:\2018\180788\d4 CADD - DWG\4.7 Trans\CADD Sheets\Federal\180788A-sht-XSEC.dgn

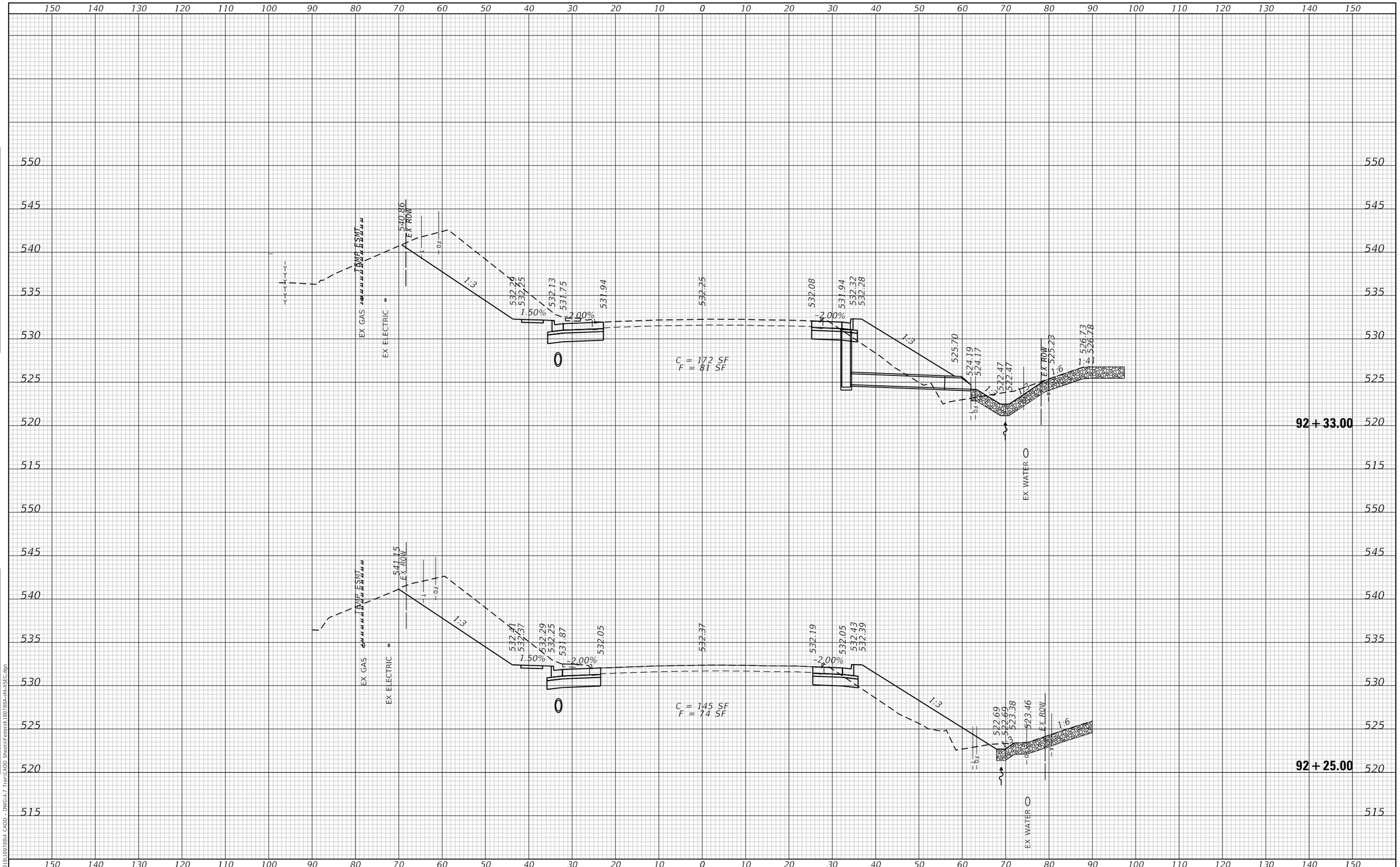

FINAL SURVEY		BY	DATE
NOTE BOOK	SURVEYED		
NO.	PLOTTED		
	TEMPLATE		
	AREAS		
	AREAS CHECKED		

ORIGINAL SURVEY		BY	DATE
NOTE BOOK	SURVEYED		
NO.	PLOTTED		
	TEMPLATE		
	AREAS		
	AREAS CHECKED		

MODEL: Default
FILE NAME: P:\2018\180788\4 CADD - DWG\4.7 Tran\CADD Sheets\Federal\180788A-sht-XSEC.dgn

TWM ENGINEERING & GEOSPATIAL SERVICES
TWM, INC.
WWW.TWM-INC.COM
IL DESIGN FIRM LICENSE NO: 184-001220

USER NAME = efisher	DESIGNED - EKF	REVISED -	
	DRAWN - EKF/KDD	REVISED -	
PLOT SCALE = 20.0000 ' / in.	CHECKED - JWS	REVISED -	
PLOT DATE = 6/17/2025	DATE - 06/2025	REVISED -	

ST. CLAIR COUNTY DEPARTMENT OF ROADS AND BRIDGES

CROSS SECTIONS

SCALE: 1"=10' | SHEET 6 OF 57 SHEETS | STA. 92+25.00 TO STA. 92+33.00

F.A.U. RTE.	SECTION	COUNTY	TOTAL SHEETS	SHEET NO.
9330	24-00301-26-PW	ST. CLAIR	191	140
		CONTRACT NO. 97872		
		ILLINOIS	FED. AID PROJECT	

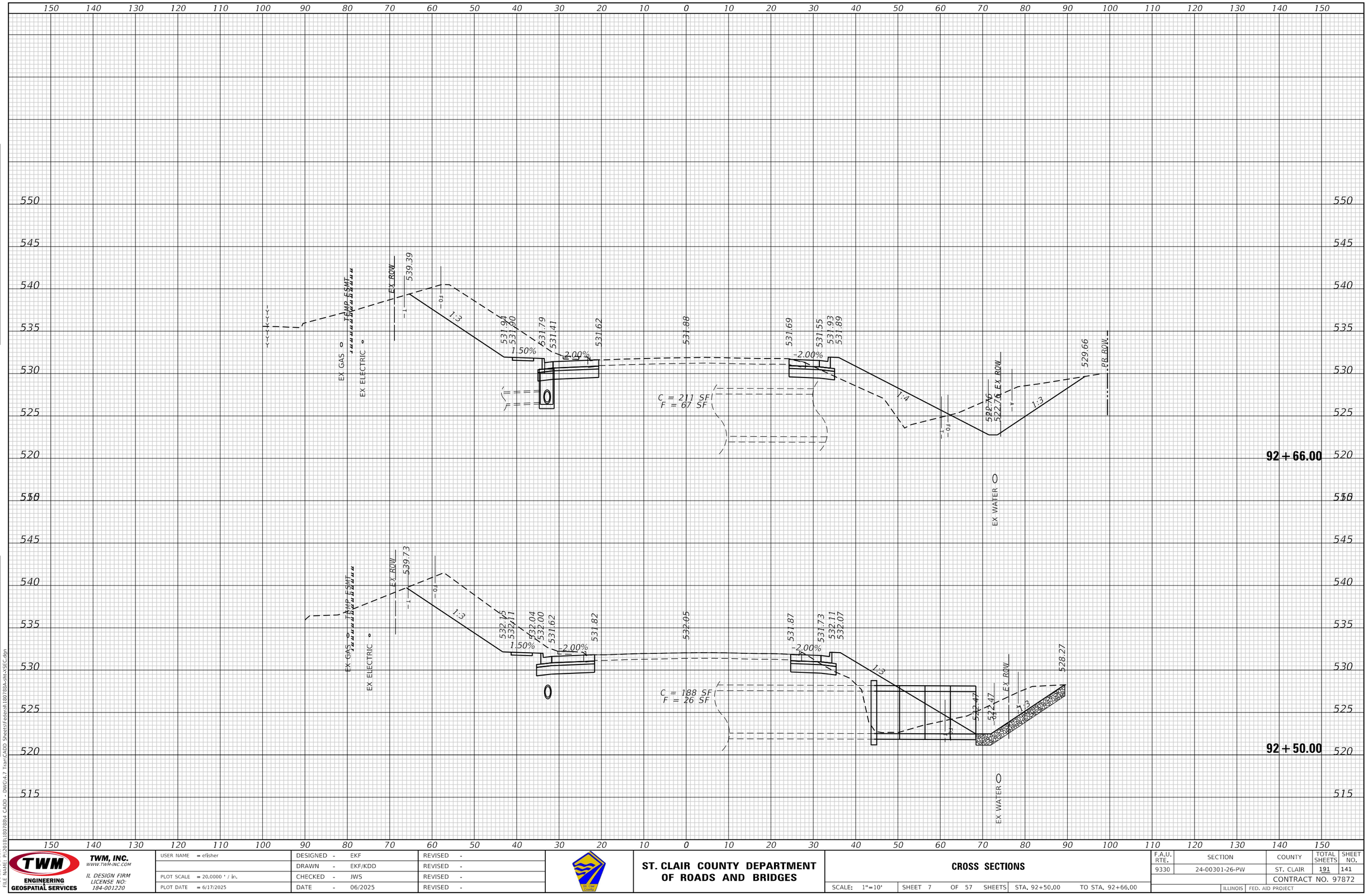

TWM, INC. WWW.TWM-INC.COM ENGINEERING GEOSPATIAL SERVICES IL DESIGN FIRM LICENSE NO. 184-001220	USER NAME = efisher	DESIGNED - EKF	REVISED -
		DRAWN - EKF/KDD	REVISED -
	PLOT SCALE = 20.0000 ' / in.	CHECKED - JWS	REVISED -
	PLOT DATE = 6/17/2025	DATE - 06/2025	REVISED -

ST. CLAIR COUNTY DEPARTMENT OF ROADS AND BRIDGES

CROSS SECTIONS

SCALE: 1"=10' | SHEET 7 OF 57 SHEETS | STA. 92+50.00 | TO STA. 92+66.00

F.A.U. RTE.	SECTION	COUNTY	TOTAL SHEETS	SHEET NO.
9330	24-00301-26-PW	ST. CLAIR	191	141
		CONTRACT NO. 97872		
	ILLINOIS	FED. AID PROJECT		

ORIGINAL SURVEY | FINAL SURVEY
NOTE BOOK
NO.
SURVEYED
PLOTTED
TEMPLATE
AREAS
AREAS CHECKED
BY
DATE

MODEL: Default
FILE NAME: P:\2018\18078804 CADD - DWG\4-7 Tran\CADD Sheets\Federal\180788A-dht-XSEC.dgn

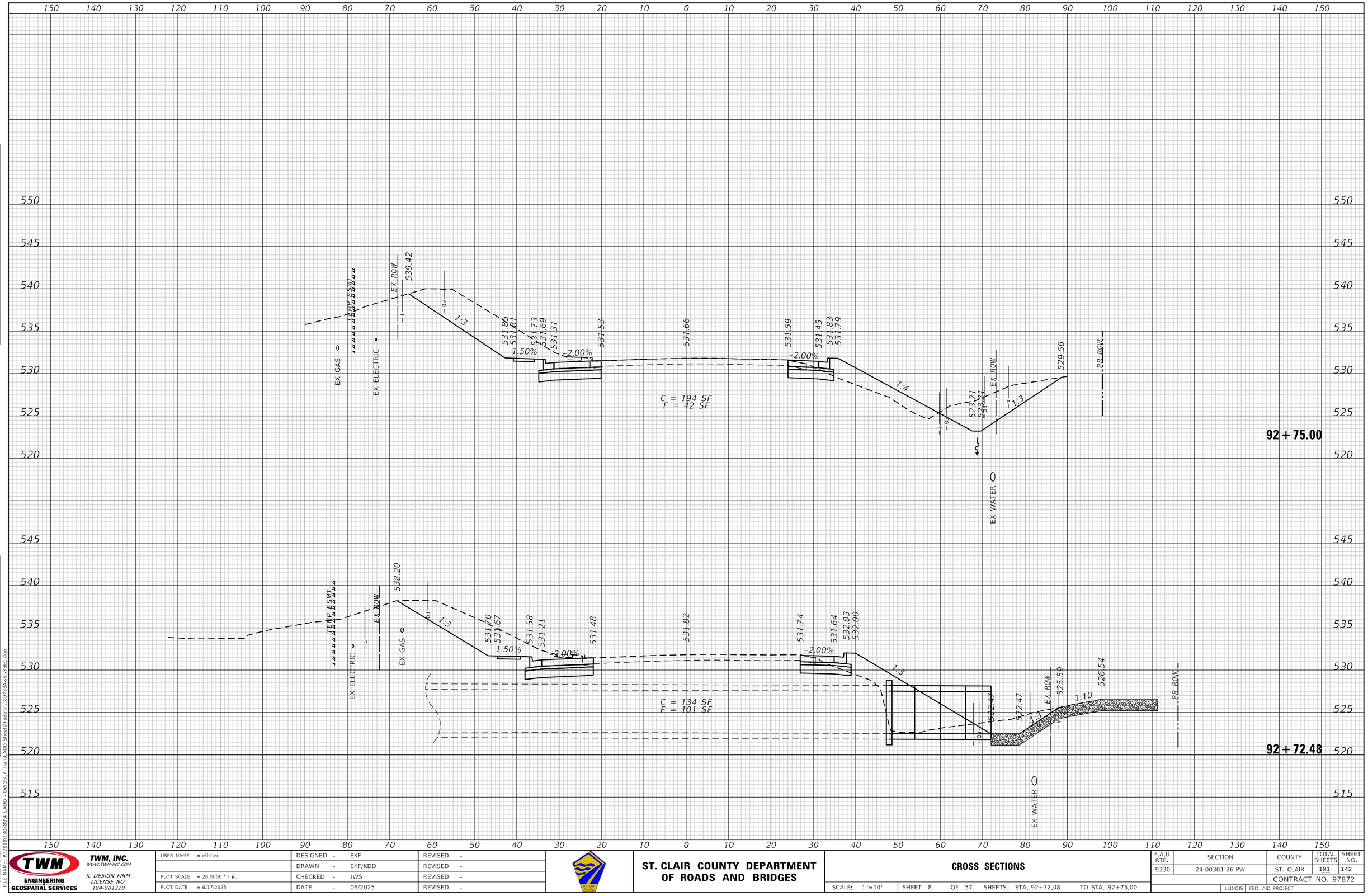

USER NAME = efisher	DESIGNED - EKF	REVISED -	
	DRAWN - EKF/KDD	REVISED -	
PLOT SCALE = 20.0000 ' / in.	CHECKED - JWS	REVISED -	
PLOT DATE = 6/17/2025	DATE - 06/2025	REVISED -	

TWM, INC.
WWW.TWM-INC.COM
IL DESIGN FIRM LICENSE NO. 184-001220
ENGINEERING GEOSPATIAL SERVICES

ST. CLAIR COUNTY DEPARTMENT OF ROADS AND BRIDGES

CROSS SECTIONS

SCALE: 1"=10' | SHEET 8 OF 57 SHEETS | STA. 92+72.48 | TO STA. 92+75.00

F.A.U. RTE.	SECTION	COUNTY	TOTAL SHEETS	SHEET NO.
9330	24-00301-26-PW	ST. CLAIR	191	142
		CONTRACT NO. 97872		
		ILLINOIS	FED. AID PROJECT	

FINAL SURVEY / ORIGINAL SURVEY
NOTE BOOK
NO.
SURVEYED
PLOTTED
TEMPLATE
AREAS
AREAS CHECKED
BY
DATE

MODEL: Default
FILE NAME: P:\2018\1807884 CADD - DWG\4-7 Tran\CADD Sheets\Federal\180788A-dht-XSEC.dgn

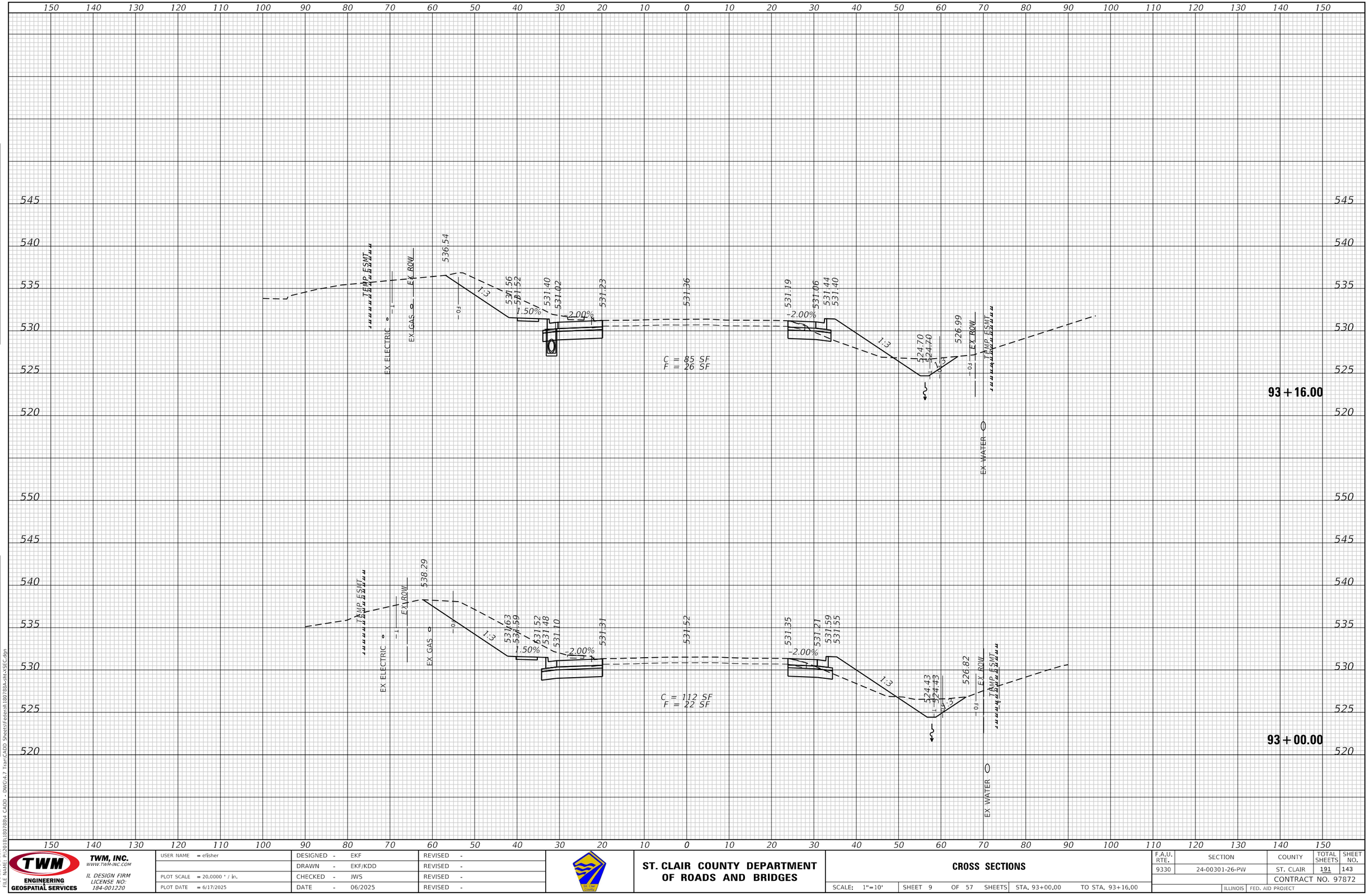

TWM ENGINEERING GEOSPATIAL SERVICES	TWM, INC. WWW.TWM-INC.COM IL DESIGN FIRM LICENSE NO: 184-001220	USER NAME = efisher	DESIGNED - EKF	REVISED -	ST. CLAIR COUNTY DEPARTMENT OF ROADS AND BRIDGES	CROSS SECTIONS	F.A.U. RTE. 9330	SECTION 24-00301-26-PW	COUNTY ST. CLAIR	TOTAL SHEETS 191	SHEET NO. 143
			DRAWN - EKF/KDD	REVISED -					CONTRACT NO. 97872		
		PLOT SCALE = 20.0000 ' / in.	CHECKED - JWS	REVISED -							
		PLOT DATE = 6/17/2025	DATE - 06/2025	REVISED -		SCALE: 1"=10' SHEET 9 OF 57 SHEETS STA. 93+00.00 TO STA. 93+16.00			ILLINOIS FED. AID PROJECT		

MODEL: Default
FILE NAME: P:\2018\180788\4 CADD - DWG\4.7 Tran\CADD Sheets\Federal\180788A-sht-XSEC.dgn

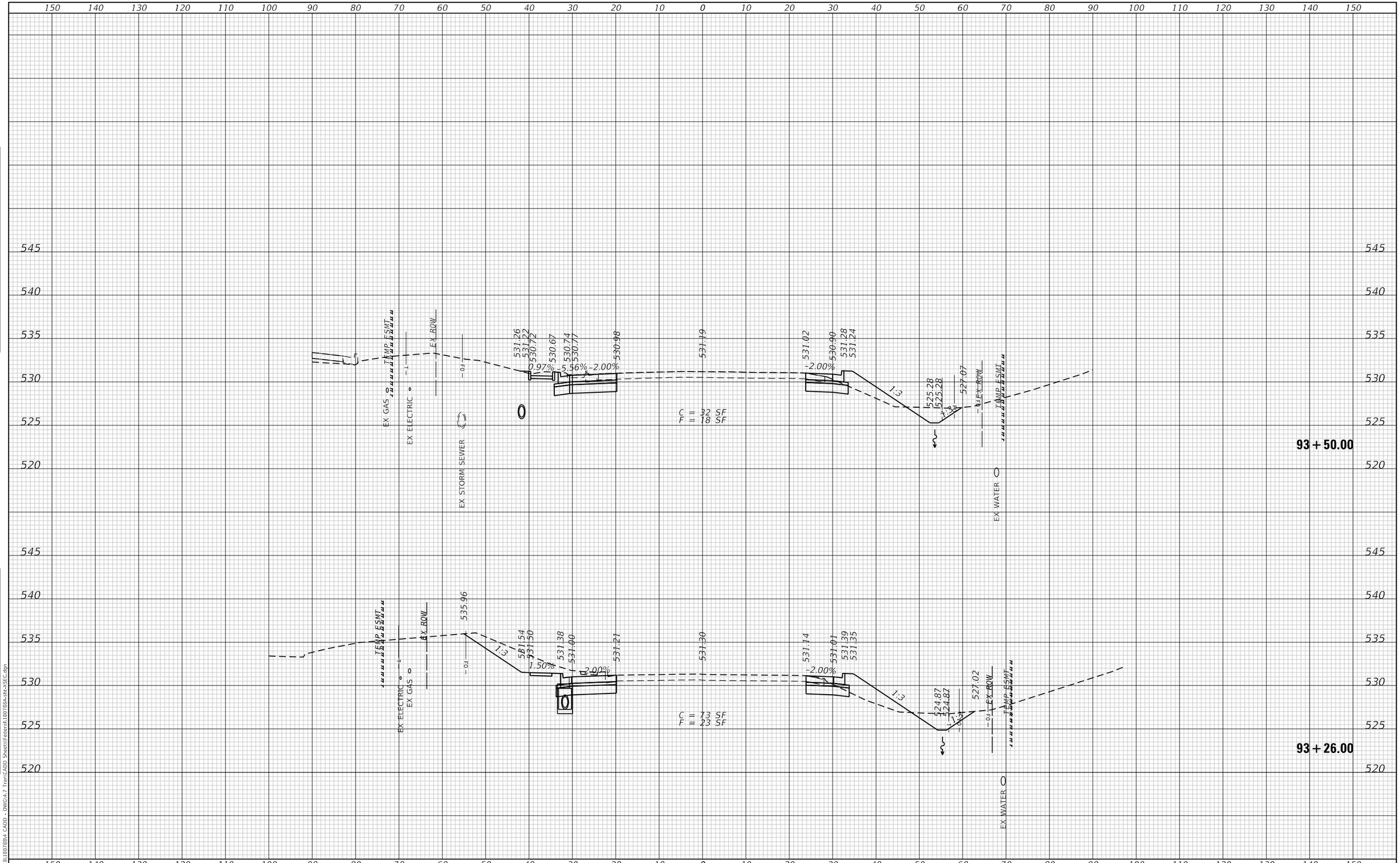

TWM ENGINEERING & GEOSPATIAL SERVICES	TWM, INC. WWW.TWM-INC.COM IL DESIGN FIRM LICENSE NO: 184-001220	USER NAME = efisher	DESIGNED - EKF	REVISED -	ST. CLAIR COUNTY DEPARTMENT OF ROADS AND BRIDGES
			DRAWN - EKF/KDD	REVISED -	
		PLOT SCALE = 20.0000 ' / in.	CHECKED - JWS	REVISED -	
		PLOT DATE = 6/17/2025	DATE - 06/2025	REVISED -	

CROSS SECTIONS

SCALE: 1"=10' | SHEET 10 OF 57 SHEETS | STA. 93+26.00 TO STA. 93+50.00

F.A.U. RTE.	SECTION	COUNTY	TOTAL SHEETS	SHEET NO.
9330	24-00301-26-PW	ST. CLAIR	191	144

CONTRACT NO. 97872

ILLINOIS | FED. AID PROJECT

FINAL SURVEY: NOTE BOOK NO. | SURVEYED | PLOTTED | TEMPLATE | AREAS | AREAS CHECKED | BY | DATE

ORIGINAL SURVEY: NOTE BOOK NO. | SURVEYED | PLOTTED | TEMPLATE | AREAS | AREAS CHECKED | BY | DATE

MODEL: Default
FILE NAME: P:\2018\180788\4 CADD - DWG\4.7 Tran\CADD Sheets\Federal\180788A-sht-XSEC.dgn

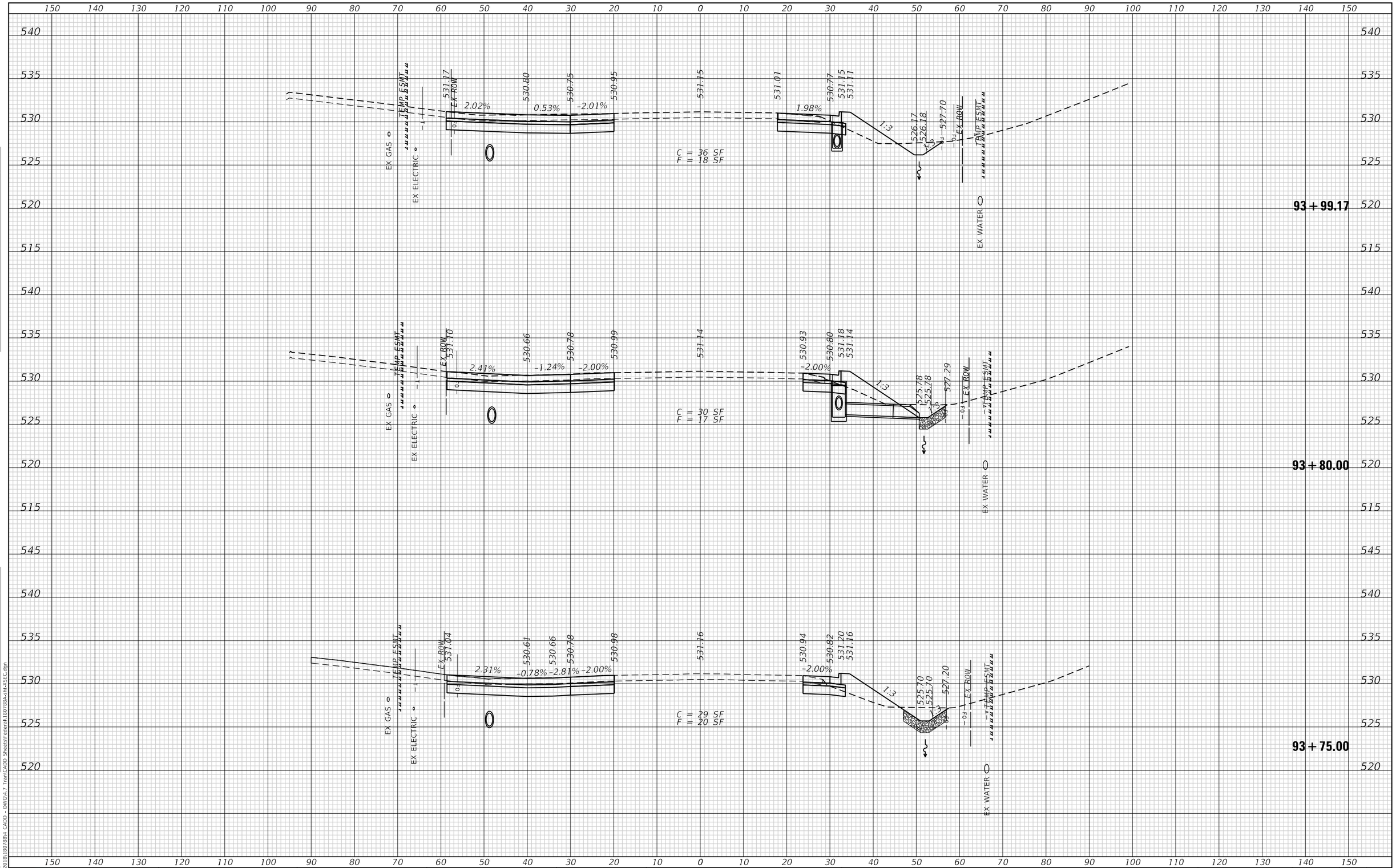

USER NAME = efisher	DESIGNED - EKF	REVISED -	
	DRAWN - EKF/KDD	REVISED -	
PLOT SCALE = 20.0000 ' / in.	CHECKED - JWS	REVISED -	
PLOT DATE = 6/17/2025	DATE - 06/2025	REVISED -	

TWM, INC. WWW.TWM-INC.COM
IL DESIGN FIRM LICENSE NO. 184-001220
ENGINEERING GEOSPATIAL SERVICES

ST. CLAIR COUNTY DEPARTMENT OF ROADS AND BRIDGES

CROSS SECTIONS

SCALE: 1"=10' | SHEET 11 OF 57 SHEETS | STA. 93+75.00 | TO STA. 93+99.17

F.A.U. RTE.	SECTION	COUNTY	TOTAL SHEETS	SHEET NO.
9330	24-00301-26-PW	ST. CLAIR	191	145
		CONTRACT NO. 97872		
		ILLINOIS	FED. AID PROJECT	

FINAL SURVEY / ORIGINAL SURVEY
NOTE BOOK
NO.
SURVEYED
PLOTTED
TEMPLATE
AREAS
AREAS CHECKED
BY
DATE

MODEL: Default
FILE NAME: P:\2018\18078804 CADD - DWG\4-7 Tran\CADD Sheets\Federal\180788A-dht-XSEC.dgn

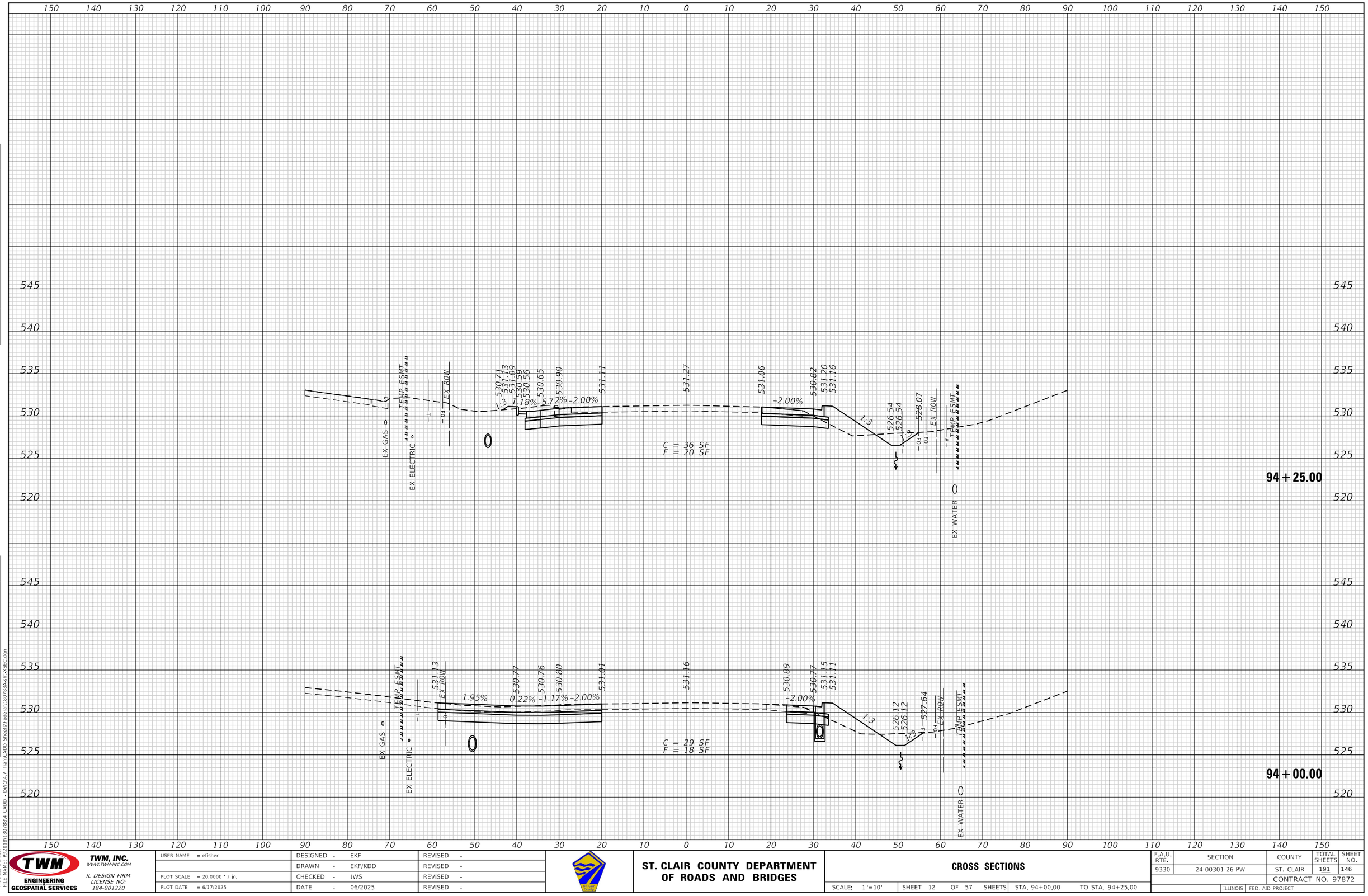

FINAL SURVEY		BY	DATE
NOTE BOOK NO.	SURVEYED		
	PLOTTED		
	TEMPLATE		
	AREAS		
	AREAS CHECKED		

ORIGINAL SURVEY		BY	DATE
NOTE BOOK NO.	SURVEYED		
	PLOTTED		
	TEMPLATE		
	AREAS		
	AREAS CHECKED		

MODEL: Default
FILE NAME: P:\2018\180788\4 CADD - DWG\4.7 Tran\CADD Sheets\Federal\180788A-sht-XSEC.dgn

TWM, INC.
WWW.TWM-INC.COM
IL DESIGN FIRM LICENSE NO: 184-001220
ENGINEERING & GEOSPATIAL SERVICES

USER NAME = efisher	DESIGNED - EKF	REVISED -	
	DRAWN - EKF/KDD	REVISED -	
PLOT SCALE = 20.0000 ' / in.	CHECKED - JWS	REVISED -	
PLOT DATE = 6/17/2025	DATE - 06/2025	REVISED -	

ST. CLAIR COUNTY DEPARTMENT OF ROADS AND BRIDGES

CROSS SECTIONS

SCALE: 1"=10' | SHEET 12 OF 57 SHEETS | STA. 94+00.00 TO STA. 94+25.00

F.A.U. RTE.	SECTION	COUNTY	TOTAL SHEETS	SHEET NO.
9330	24-00301-26-PW	ST. CLAIR	191	146

CONTRACT NO. 97872

ILLINOIS | FED. AID PROJECT

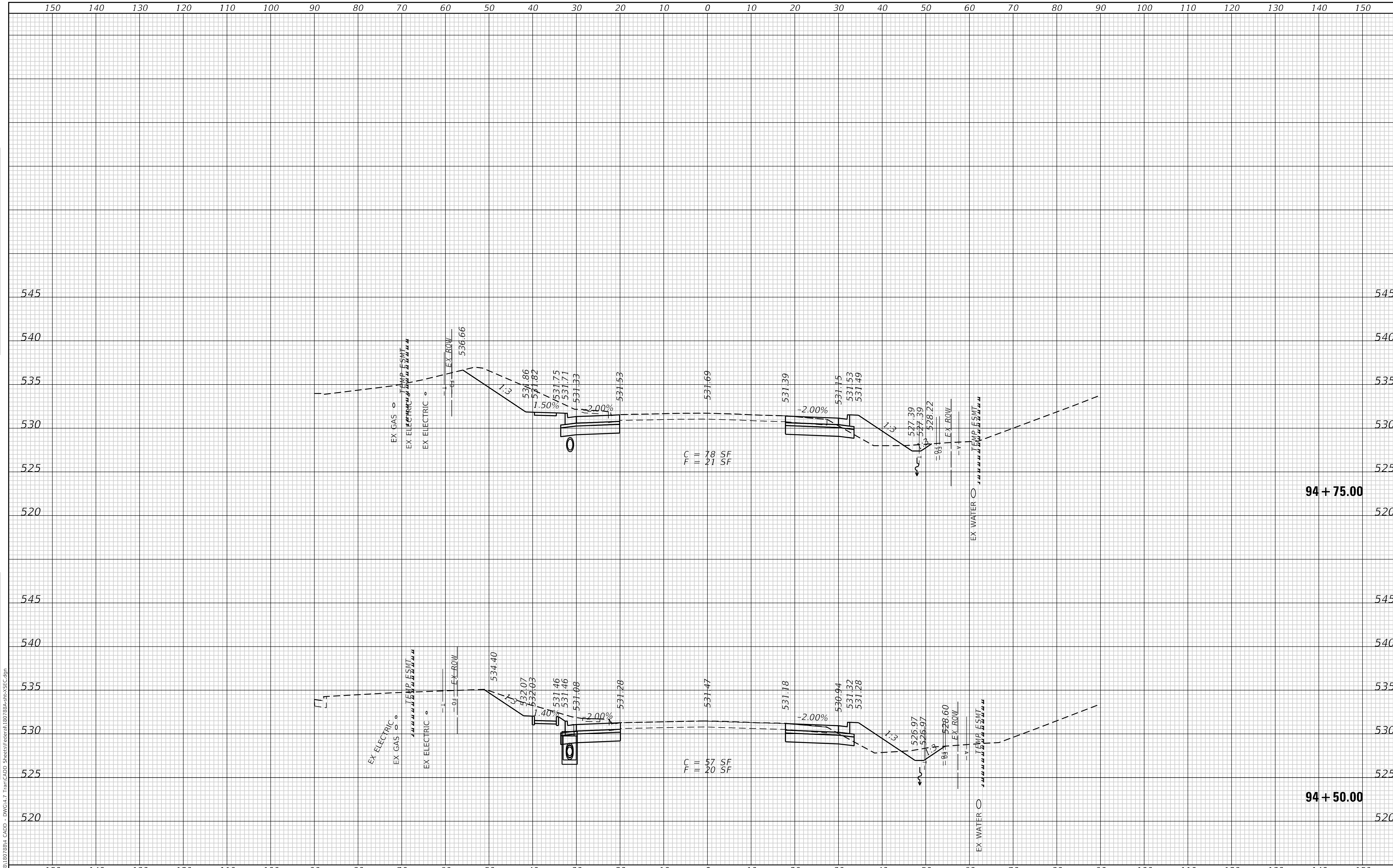

FINAL SURVEY	NOTE BOOK	NO.
SURVEYED	PLOTTED	TEMPLATE
AREAS	AREAS CHECKED	
BY	DATE	

ORIGINAL SURVEY	NOTE BOOK	NO.
SURVEYED	PLOTTED	TEMPLATE
AREAS	AREAS CHECKED	
BY	DATE	

MODEL: Default
FILE NAME: P:\2018\180788\4 CADD - DWG\4.7 Tran\CADD Sheets\Federal\180788A-sht-XSEC.dgn

TWM, INC.
WWW.TWM-INC.COM
ENGINEERING & GEOSPATIAL SERVICES
IL DESIGN FIRM LICENSE NO: 184-001220

USER NAME	= efisher
PLOT SCALE	= 20.0000 ' / in.
PLOT DATE	= 6/17/2025

DESIGNED	-	EKF
DRAWN	-	EKF/KDD
CHECKED	-	JWS
DATE	-	06/2025

REVISED	-
REVISED	-
REVISED	-
REVISED	-

ST. CLAIR COUNTY DEPARTMENT OF ROADS AND BRIDGES

CROSS SECTIONS

SCALE: 1"=10' | SHEET 13 OF 57 SHEETS | STA. 94+50.00 TO STA. 94+75.00

F.A.U. RTE.	SECTION	COUNTY	TOTAL SHEETS	SHEET NO.
9330	24-00301-26-PW	ST. CLAIR	191	147
		CONTRACT NO. 97872		
	ILLINOIS	FED. AID PROJECT		

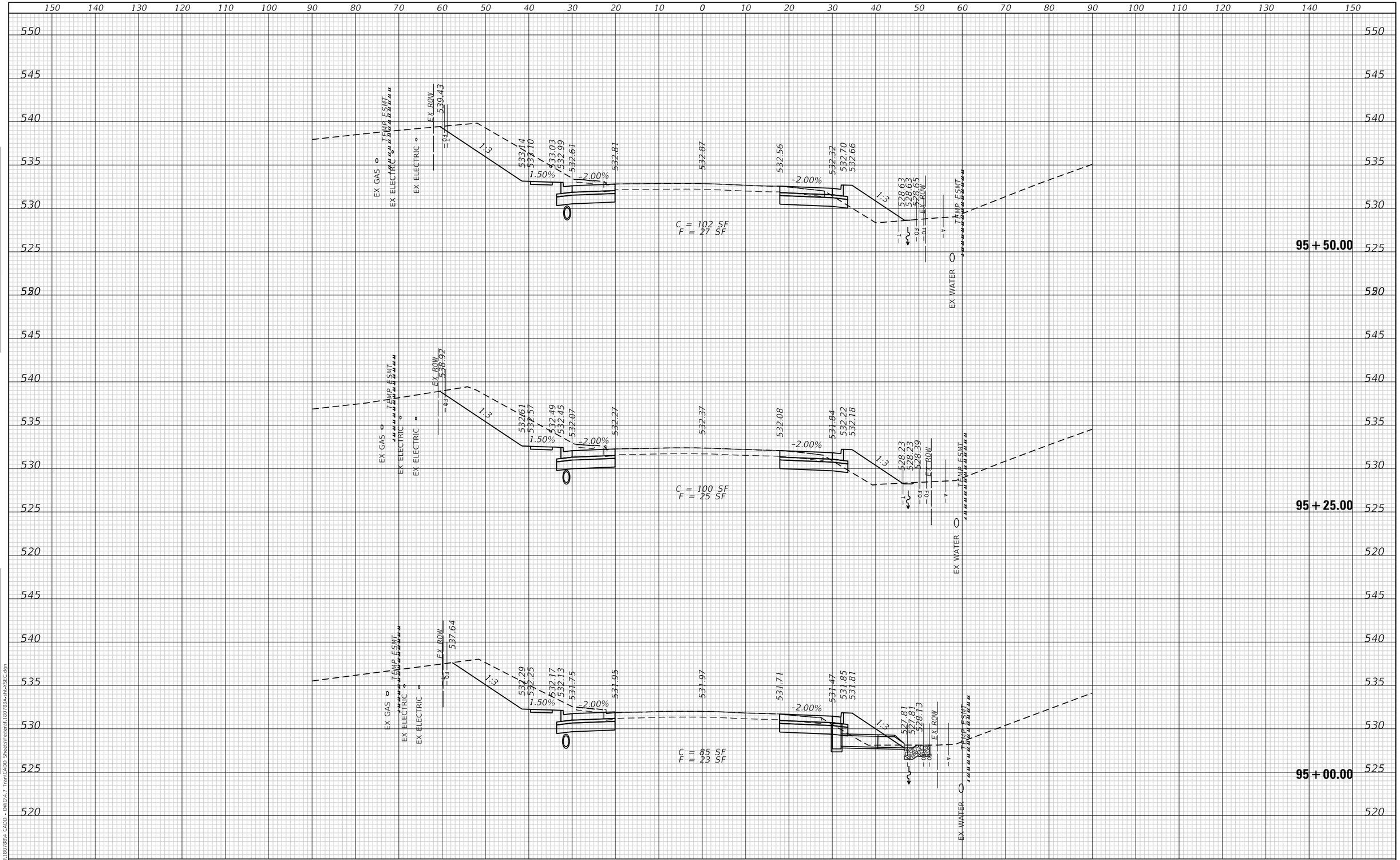

TWM ENGINEERING GEOSPATIAL SERVICES	TWM, INC. WWW.TWM-INC.COM IL DESIGN FIRM LICENSE NO: 184-001220	USER NAME = efisher	DESIGNED - EKF	REVISED -	ST. CLAIR COUNTY DEPARTMENT OF ROADS AND BRIDGES
			DRAWN - EKF/KDD	REVISED -	
		PLOT SCALE = 20.0000 ' / in.	CHECKED - JWS	REVISED -	
		PLOT DATE = 6/17/2025	DATE - 06/2025	REVISED -	

CROSS SECTIONS

SCALE: 1"=10' | SHEET 14 OF 57 SHEETS | STA. 95+00.00 | TO STA. 95+50.00

F.A.U. RTE.	SECTION	COUNTY	TOTAL SHEETS	SHEET NO.
9330	24-00301-26-PW	ST. CLAIR	191	148
		CONTRACT NO. 97872		
		ILLINOIS	FED. AID PROJECT	

FINAL SURVEY — NOTE BOOK — NO. — BY — DATE — SURVEYED — PLOTTED — TEMPLATE — AREAS — AREAS CHECKED

ORIGINAL SURVEY — NOTE BOOK — NO. — BY — DATE — SURVEYED — PLOTTED — TEMPLATE — AREAS — AREAS CHECKED

MODEL: Default
FILE NAME: P:\2018\18078\4 CADD - DWG\4.7 Tran\CADD Sheets\Federal\18078PA-sht-XSEC.dgn

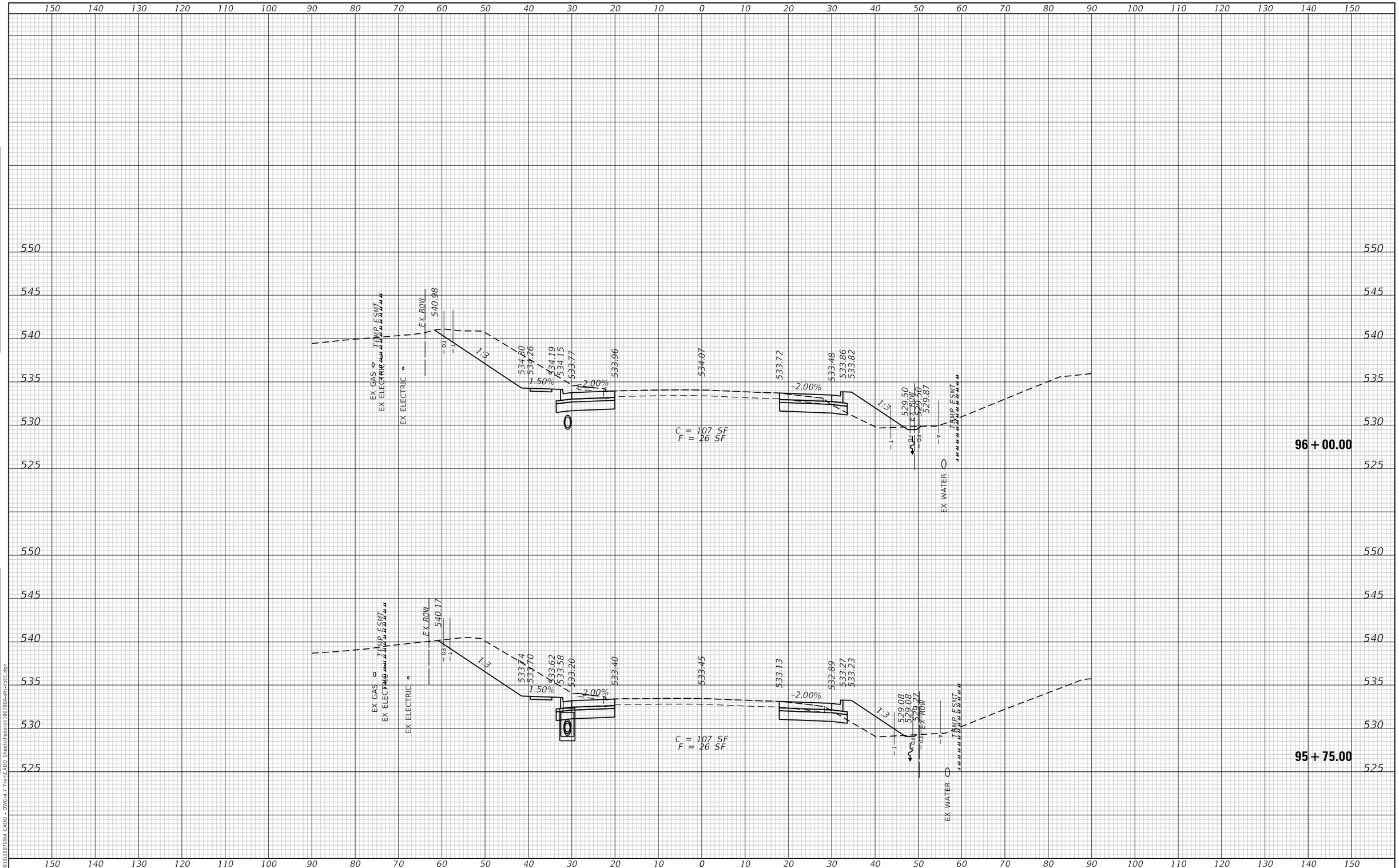

USER NAME = efisher	DESIGNED - EKF	REVISED -	
	DRAWN - EKF/KDD	REVISED -	
PLOT SCALE = 20.0000 ' / in.	CHECKED - JWS	REVISED -	
PLOT DATE = 6/17/2025	DATE - 06/2025	REVISED -	

TWM, INC.
WWW.TWM-INC.COM
IL DESIGN FIRM LICENSE NO. 184-001220
ENGINEERING GEOSPATIAL SERVICES

ST. CLAIR COUNTY DEPARTMENT OF ROADS AND BRIDGES

CROSS SECTIONS

SCALE: 1"=10' | SHEET 15 OF 57 SHEETS | STA. 95+75.00 | TO STA. 96+00.00

F.A.U. RTE.	SECTION	COUNTY	TOTAL SHEETS	SHEET NO.
9330	24-00301-26-PW	ST. CLAIR	191	149
		CONTRACT NO. 97872		
		ILLINOIS	FED. AID PROJECT	

FINAL SURVEY — NOTE BOOK — NO. — SURVEYED — PLOTTED — TEMPLATE — AREAS — AREAS CHECKED — BY — DATE

ORIGINAL SURVEY — NOTE BOOK — NO. — SURVEYED — PLOTTED — TEMPLATE — AREAS — AREAS CHECKED — BY — DATE

MODEL: Default
FILE NAME: P:\2018\18078804 CADD - DWG\4-7 Tran\CADD Sheets\Federal\180788A-dht-XSEC.dgn

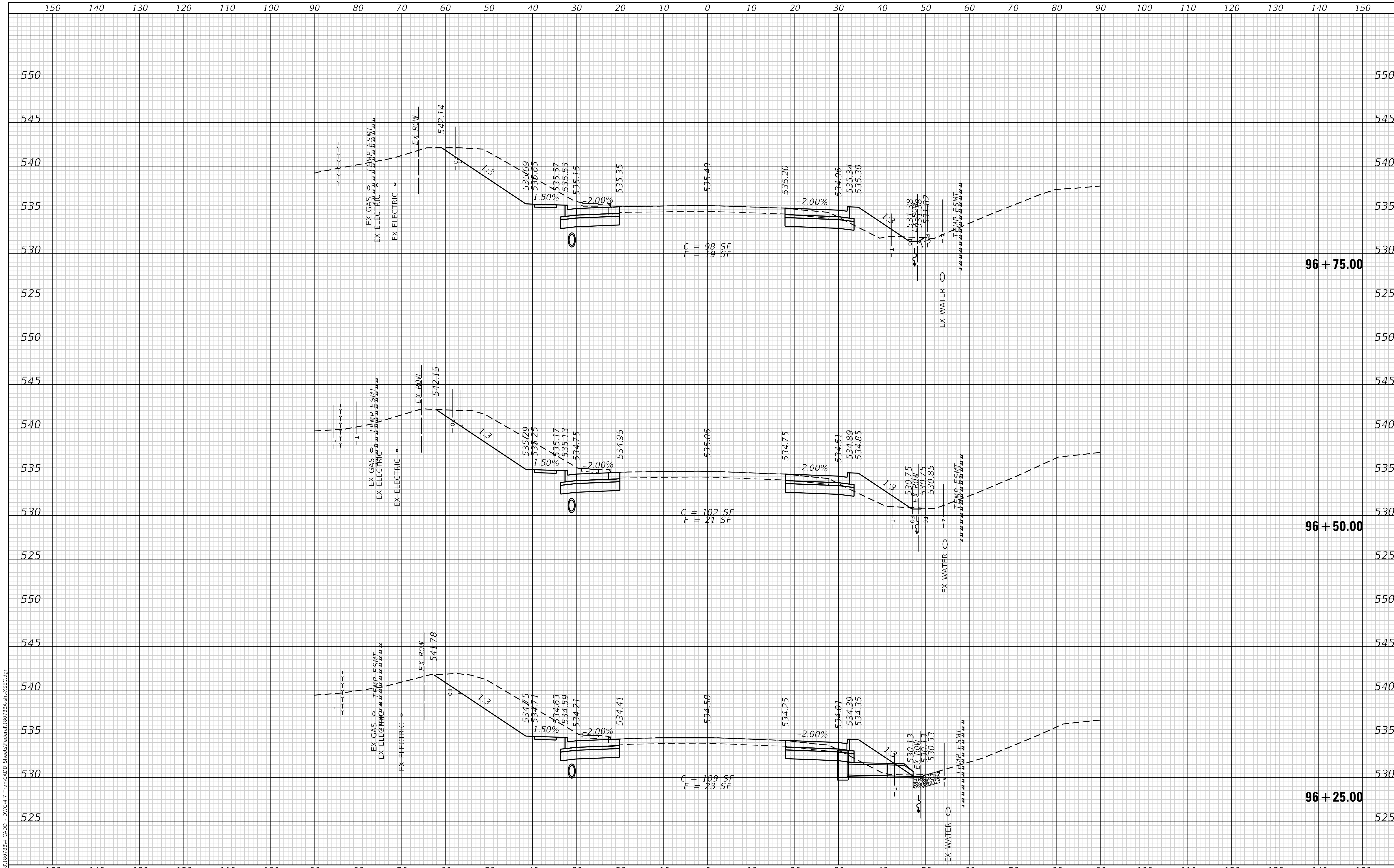

FINAL SURVEY | NOTE BOOK | NO. | SURVEYED | PLOTTED | TEMPLATE | AREAS | AREAS CHECKED | BY | DATE

ORIGINAL SURVEY | NOTE BOOK | NO. | SURVEYED | PLOTTED | TEMPLATE | AREAS | AREAS CHECKED | BY | DATE

MODEL: Default
FILE NAME: P:\2018\180788\4 CADD - DWG\4.7 Tran\CADD Sheets\Federal\180788A-sht-XSEC.dgn

TWM ENGINEERING & GEOSPATIAL SERVICES

TWM, INC.
WWW.TWM-INC.COM
IL DESIGN FIRM LICENSE NO: 184-001220

USER NAME = efisher	DESIGNED - EKF	REVISED -
	DRAWN - EKF/KDD	REVISED -
PLOT SCALE = 20.0000 ' / in.	CHECKED - JWS	REVISED -
PLOT DATE = 6/17/2025	DATE - 06/2025	REVISED -

St. Clair County

ST. CLAIR COUNTY DEPARTMENT OF ROADS AND BRIDGES

CROSS SECTIONS

SCALE: 1"=10' | SHEET 16 OF 57 SHEETS | STA. 96+25.00 TO STA. 96+75.00

F.A.U. RTE.	SECTION	COUNTY	TOTAL SHEETS	SHEET NO.
9330	24-00301-26-PW	ST. CLAIR	191	150

CONTRACT NO. 97872

ILLINOIS | FED. AID PROJECT

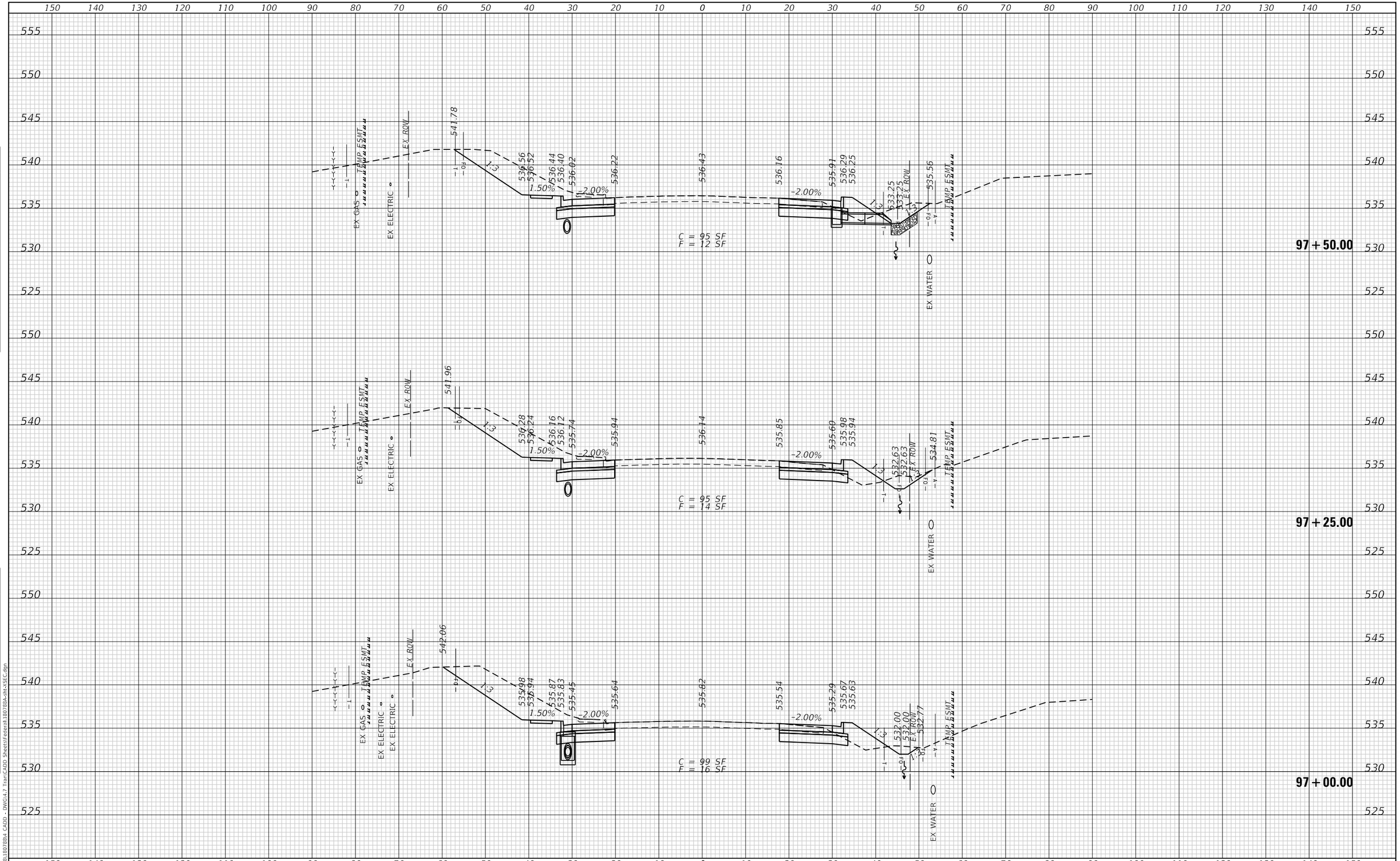

TWM ENGINEERING & GEOSPATIAL SERVICES	TWM, INC. WWW.TWM-INC.COM IL DESIGN FIRM LICENSE NO: 184-001220	USER NAME = efisher	DESIGNED - EKF	REVISED -	ST. CLAIR COUNTY DEPARTMENT OF ROADS AND BRIDGES
			DRAWN - EKF/KDD	REVISED -	
		PLOT SCALE = 20.0000 ' / in.	CHECKED - JWS	REVISED -	
		PLOT DATE = 6/17/2025	DATE - 06/2025	REVISED -	

CROSS SECTIONS

SCALE: 1"=10' | SHEET 17 OF 57 SHEETS | STA. 97+00.00 TO STA. 97+50.00

F.A.U. RTE.	SECTION	COUNTY	TOTAL SHEETS	SHEET NO.
9330	24-00301-26-PW	ST. CLAIR	191	151
		CONTRACT NO. 97872		
		ILLINOIS	FED. AID PROJECT	

FINAL SURVEY: SURVEYED, PLOTTED, TEMPLATE, AREAS, AREAS CHECKED — NOTE BOOK NO. — BY — DATE

ORIGINAL SURVEY: SURVEYED, PLOTTED, TEMPLATE, AREAS, AREAS CHECKED — NOTE BOOK NO. — BY — DATE

MODEL: Default
FILE NAME: P:\2018\180788\4 CADD - DWG\4.7 Tran\CADD Sheets\Federal\180788A-sht-XSEC.dgn

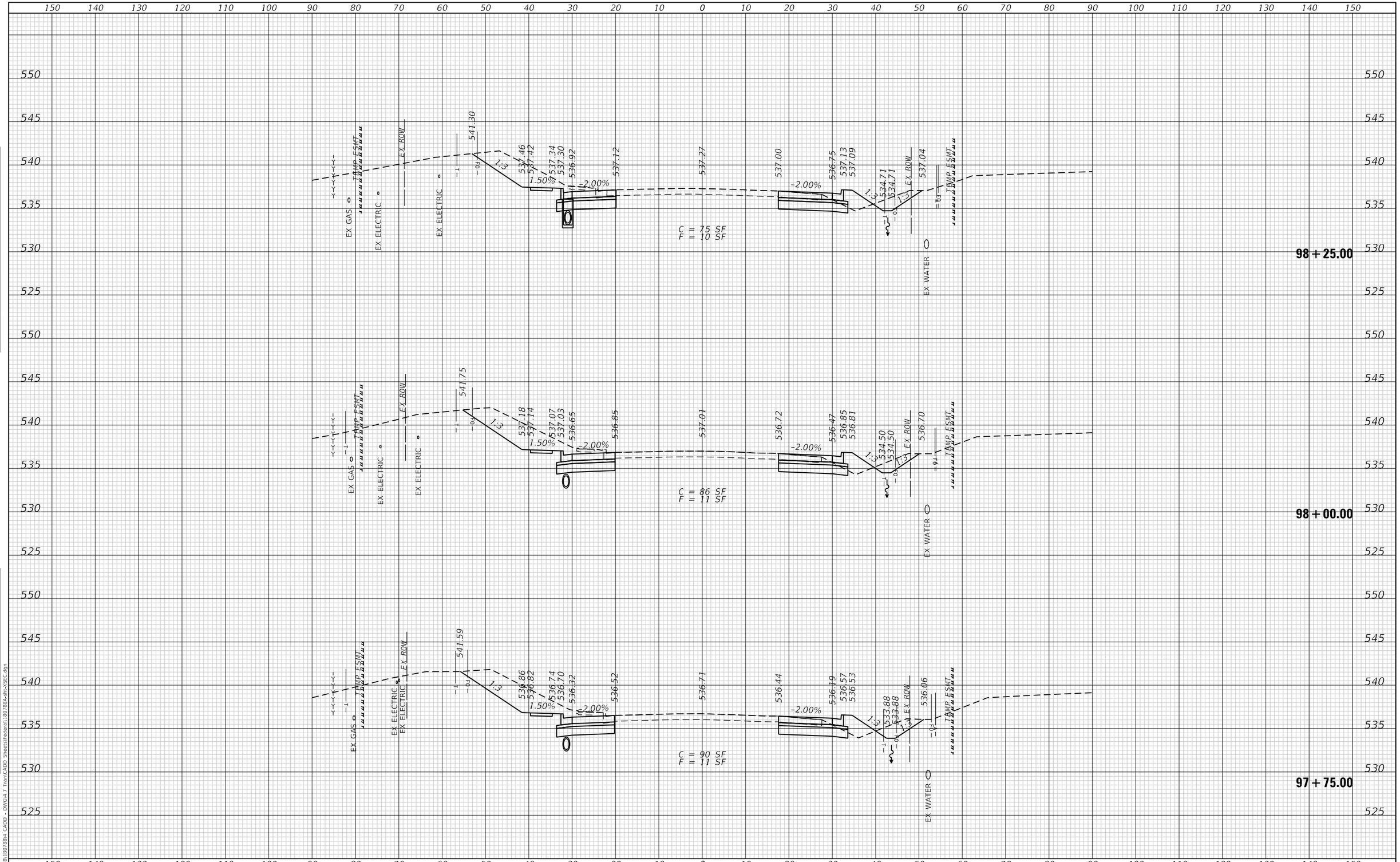

FINAL SURVEY	SURVEYED										
	PLOTTED										
	TEMPLATE										
	AREAS										
	AREAS CHECKED										
NOTE BOOK NO.											
ORIGINAL SURVEY	SURVEYED										
	PLOTTED										
	TEMPLATE										
	AREAS										
	AREAS CHECKED										
NOTE BOOK NO.											

MODEL: Default
FILE NAME: P:\2018\180788\4 CADD - DWG\4.7 Tran\CADD Sheets\Federal\180788A-sht-XSEC.dgn

TWM ENGINEERING GEOSPATIAL SERVICES

TWM, INC.
WWW.TWM-INC.COM
IL DESIGN FIRM LICENSE NO: 184-001220

USER NAME = efisher	DESIGNED - EKF	REVISED -	
	DRAWN - EKF/KDD	REVISED -	
PLOT SCALE = 20.0000 ' / in.	CHECKED - JWS	REVISED -	
PLOT DATE = 6/17/2025	DATE - 06/2025	REVISED -	

ST. CLAIR COUNTY DEPARTMENT OF ROADS AND BRIDGES

CROSS SECTIONS

SCALE: 1"=10' | SHEET 18 OF 57 SHEETS | STA. 97+75.00 TO STA. 98+25.00

F.A.U. RTE.	SECTION	COUNTY	TOTAL SHEETS	SHEET NO.
9330	24-00301-26-PW	ST. CLAIR	191	152
		CONTRACT NO. 97872		
		ILLINOIS	FED. AID PROJECT	

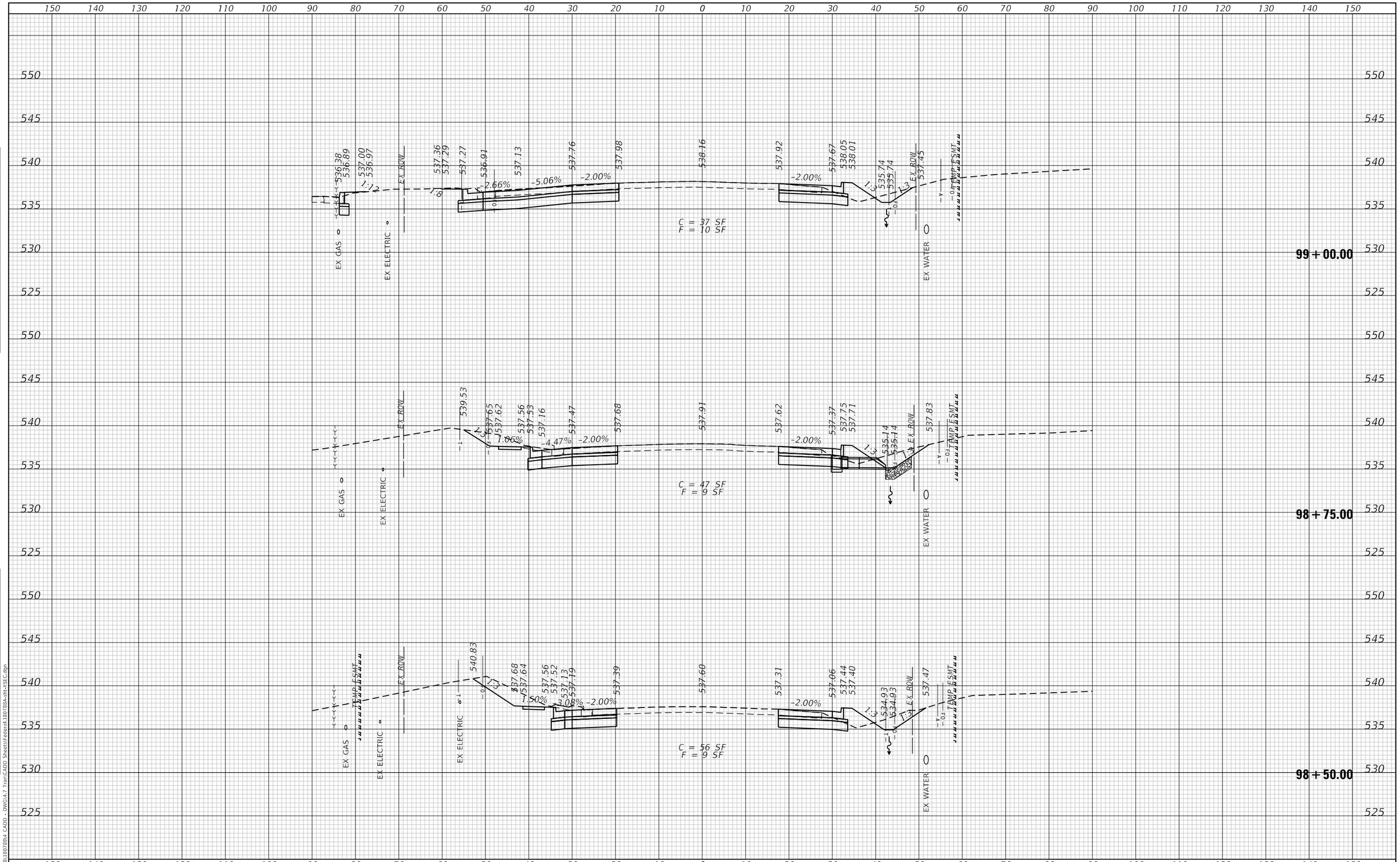

FINAL SURVEY		BY	DATE
NOTE BOOK NO.	SURVEYED		
	PLOTTED		
	TEMPLATE		
	AREAS		
	AREAS CHECKED		

ORIGINAL SURVEY		BY	DATE
NOTE BOOK NO.	SURVEYED		
	PLOTTED		
	TEMPLATE		
	AREAS		
	AREAS CHECKED		

MODEL: Default
FILE NAME: P:\2018\180788\4 CADD - DWG\4.7 Tran\CADD Sheets\Federal\180788A-sht-XSEC.dgn

TWM, INC.
WWW.TWM-INC.COM
IL DESIGN FIRM LICENSE NO: 184-001220
ENGINEERING & GEOSPATIAL SERVICES

USER NAME = efisher	DESIGNED - EKF	REVISED -	
	DRAWN - EKF/KDD	REVISED -	
PLOT SCALE = 20.0000 ' / in.	CHECKED - JWS	REVISED -	
PLOT DATE = 6/17/2025	DATE - 06/2025	REVISED -	

ST. CLAIR COUNTY DEPARTMENT OF ROADS AND BRIDGES

CROSS SECTIONS

SCALE: 1"=10' | SHEET 19 OF 57 SHEETS | STA. 98+50.00 TO STA. 99+00.00

F.A.U. RTE.	SECTION	COUNTY	TOTAL SHEETS	SHEET NO.
9330	24-00301-26-PW	ST. CLAIR	191	153

CONTRACT NO. 97872

ILLINOIS | FED. AID PROJECT

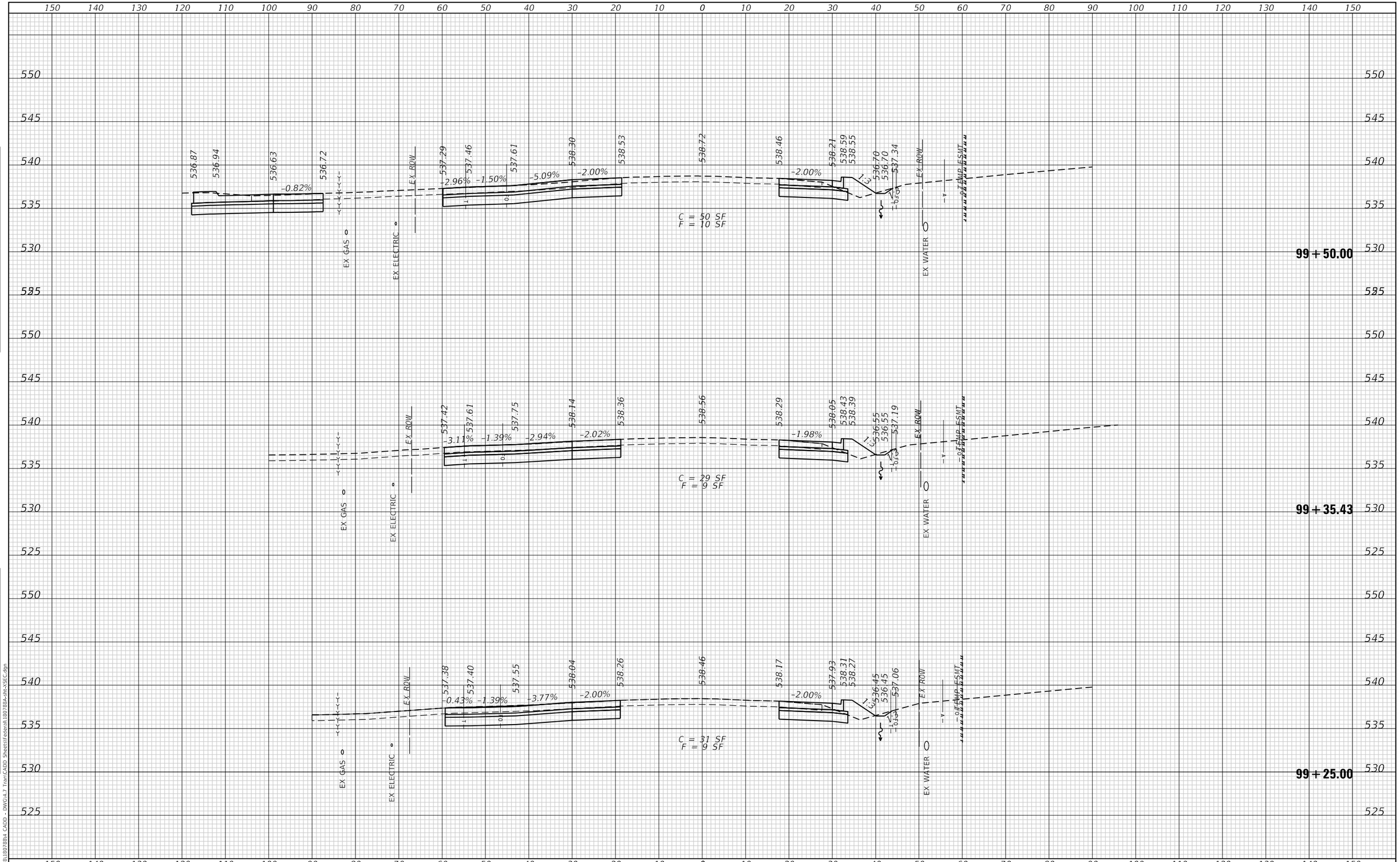

TWM ENGINEERING GEOSPATIAL SERVICES	TWM, INC. WWW.TWM-INC.COM IL DESIGN FIRM LICENSE NO: 184-001220	USER NAME = efisher	DESIGNED - EKF	REVISED -	ST. CLAIR COUNTY DEPARTMENT OF ROADS AND BRIDGES	CROSS SECTIONS	F.A.U. RTE. 9330 | SECTION 24-00301-26-PW | COUNTY ST. CLAIR | TOTAL SHEETS 191 | SHEET NO. 154
		PLOT SCALE = 20.0000 ' / in.	CHECKED - JWS	REVISED -		SCALE: 1"=10' | SHEET 20 OF 57 SHEETS | STA. 99+25.00 TO STA. 99+50.00	CONTRACT NO. 97872
		PLOT DATE = 6/17/2025	DATE - 06/2025	REVISED -			ILLINOIS | FED. AID PROJECT

FINAL SURVEY — NOTE BOOK — NO. — BY — DATE — SURVEYED — PLOTTED — TEMPLATE — AREAS — AREAS CHECKED

ORIGINAL SURVEY — NOTE BOOK — NO. — BY — DATE — SURVEYED — PLOTTED — TEMPLATE — AREAS — AREAS CHECKED

MODEL: Default
FILE NAME: P:\2018\180788\04 CADD - DWG\4.7 Tran\CADD Sheets\Federal\180788A-sht-XSEC.dgn

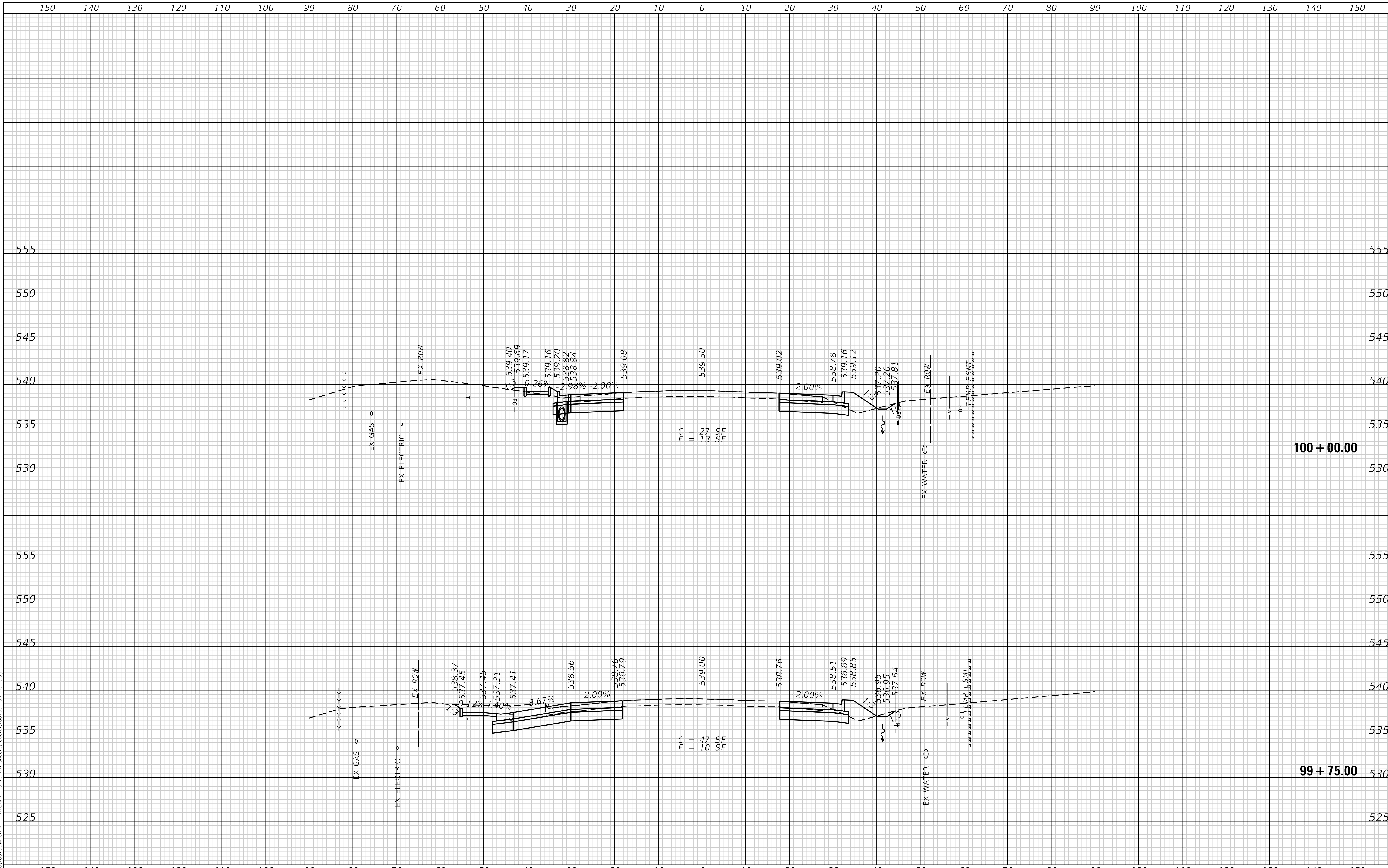

FINAL SURVEY | NOTE BOOK | NO. | SURVEYED | PLOTTED | TEMPLATE | AREAS | AREAS CHECKED | BY | DATE

ORIGINAL SURVEY | NOTE BOOK | NO. | SURVEYED | PLOTTED | TEMPLATE | AREAS | AREAS CHECKED | BY | DATE

MODEL: Default
FILE NAME: P:\2018\180788\4 CADD - DWG\4.7 Tran\CADD Sheets\Federal\180788A-sht-XSEC.dgn

TWM, INC.
WWW.TWM-INC.COM
ENGINEERING & GEOSPATIAL SERVICES
IL DESIGN FIRM LICENSE NO: 184-001220

USER NAME = efisher	DESIGNED - EKF	REVISED -	
	DRAWN - EKF/KDD	REVISED -	
PLOT SCALE = 20.0000 ' / in.	CHECKED - JWS	REVISED -	
PLOT DATE = 6/17/2025	DATE - 06/2025	REVISED -	

ST. CLAIR COUNTY DEPARTMENT OF ROADS AND BRIDGES

CROSS SECTIONS

SCALE: 1"=10' | SHEET 21 OF 57 SHEETS | STA. 99+75.00 TO STA. 100+00.00

F.A.U. RTE.	SECTION	COUNTY	TOTAL SHEETS	SHEET NO.
9330	24-00301-26-PW	ST. CLAIR	191	155

CONTRACT NO. 97872

ILLINOIS | FED. AID PROJECT

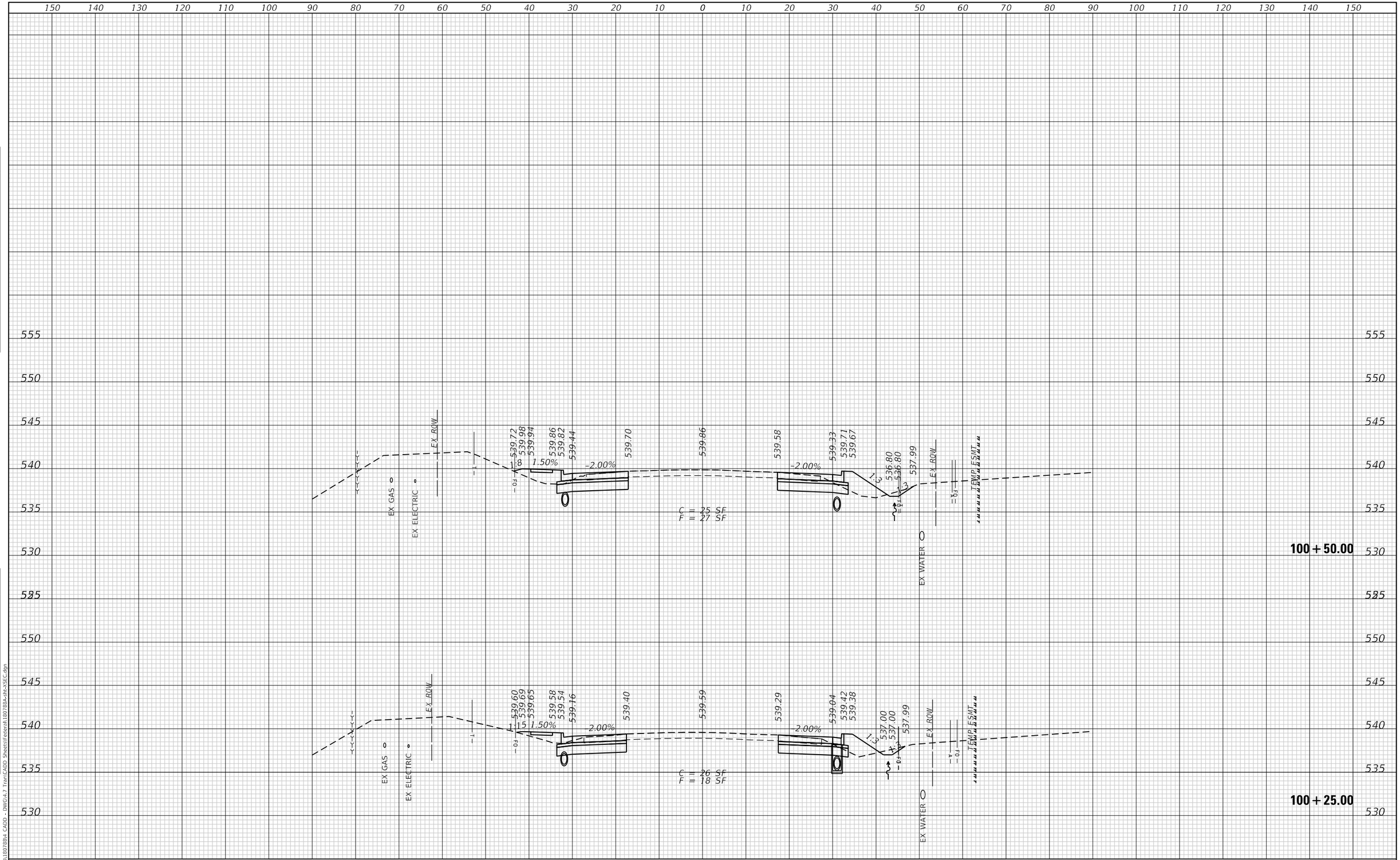

FINAL SURVEY		BY	DATE
NOTE BOOK NO.	SURVEYED		
	PLOTTED		
	TEMPLATE		
	AREAS		
	AREAS CHECKED		

ORIGINAL SURVEY		BY	DATE
NOTE BOOK NO.	SURVEYED		
	PLOTTED		
	TEMPLATE		
	AREAS		
	AREAS CHECKED		

MODEL: Default
FILE NAME: P:\2018\180788\4 CADD - DWG\4.7 Tran\CADD Sheets\Federal\180788A-sht-XSEC.dgn

TWM ENGINEERING & GEOSPATIAL SERVICES
TWM, INC.
WWW.TWM-INC.COM
IL DESIGN FIRM LICENSE NO: 184-001220

USER NAME = efisher	DESIGNED - EKF	REVISED -	
	DRAWN - EKF/KDD	REVISED -	
PLOT SCALE = 20.0000 ' / in.	CHECKED - JWS	REVISED -	
PLOT DATE = 6/17/2025	DATE - 06/2025	REVISED -	

ST. CLAIR COUNTY DEPARTMENT OF ROADS AND BRIDGES

CROSS SECTIONS

SCALE: 1"=10' | SHEET 22 OF 57 SHEETS | STA. 100+25.00 TO STA. 100+50.00

F.A.U. RTE.	SECTION	COUNTY	TOTAL SHEETS	SHEET NO.
9330	24-00301-26-PW	ST. CLAIR	191	156
		CONTRACT NO. 97872		
		ILLINOIS	FED. AID PROJECT	

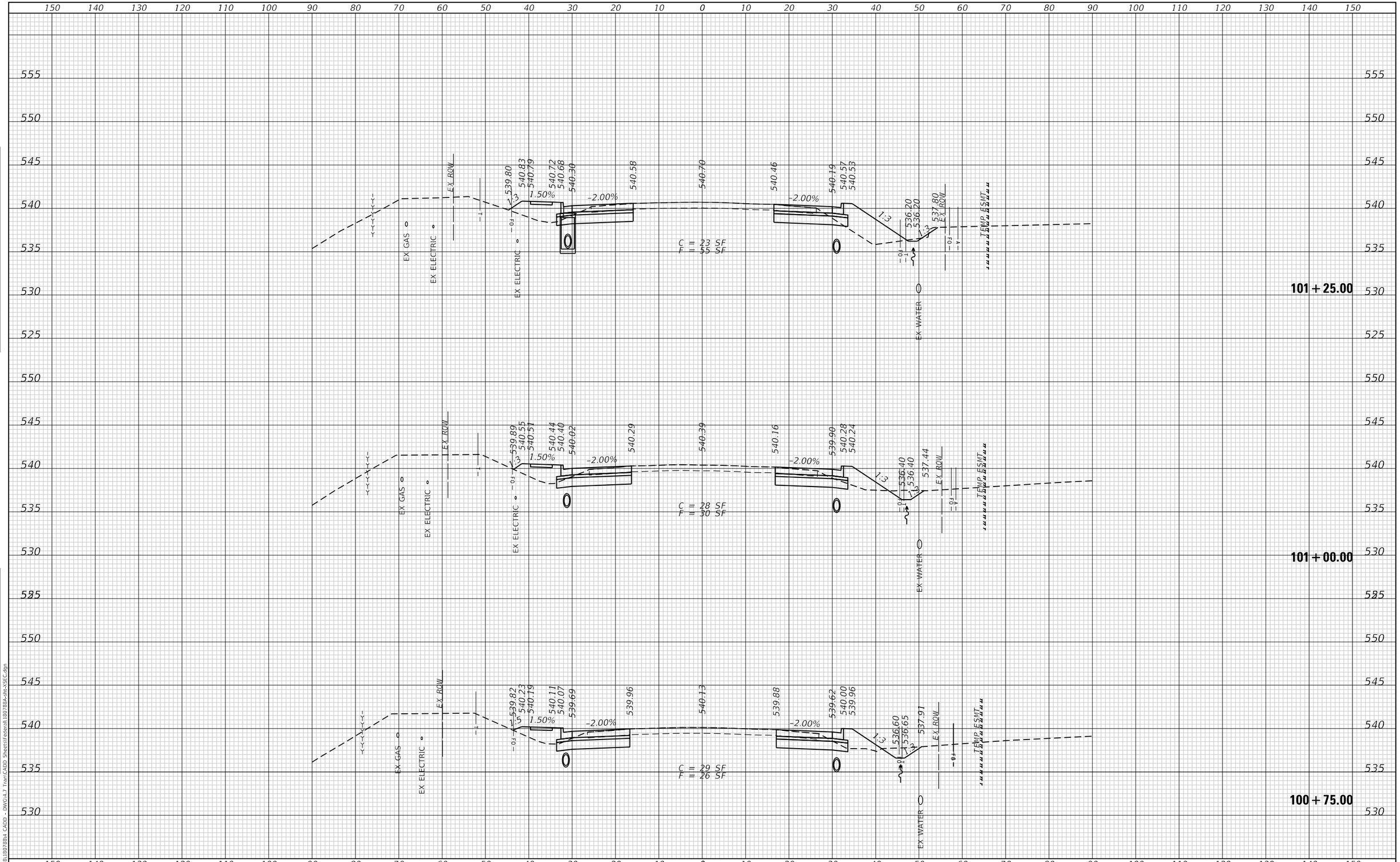

FINAL SURVEY | NOTE BOOK NO. | SURVEYED | PLOTTED | TEMPLATE | AREAS | AREAS CHECKED | BY | DATE

ORIGINAL SURVEY | NOTE BOOK NO. | SURVEYED | PLOTTED | TEMPLATE | AREAS | AREAS CHECKED | BY | DATE

MODEL: Default
FILE NAME: P:\2018\180788\4 CADD - DWG\4.7 Tran\CADD Sheets\Federal\180788A-sht-XSEC.dgn

TWM ENGINEERING & GEOSPATIAL SERVICES
TWM, INC.
WWW.TWM-INC.COM
IL DESIGN FIRM LICENSE NO: 184-001220

USER NAME = efisher	DESIGNED - EKF	REVISED -	
	DRAWN - EKF/KDD	REVISED -	
PLOT SCALE = 20.0000 ' / in.	CHECKED - JWS	REVISED -	
PLOT DATE = 6/17/2025	DATE - 06/2025	REVISED -	

ST. CLAIR COUNTY DEPARTMENT OF ROADS AND BRIDGES

CROSS SECTIONS

SCALE: 1"=10' | SHEET 23 OF 57 SHEETS | STA. 100+75.00 TO STA. 101+25.00

F.A.U. RTE.	SECTION	COUNTY	TOTAL SHEETS	SHEET NO.
9330	24-00301-26-PW	ST. CLAIR	191	157

CONTRACT NO. 97872

ILLINOIS | FED. AID PROJECT

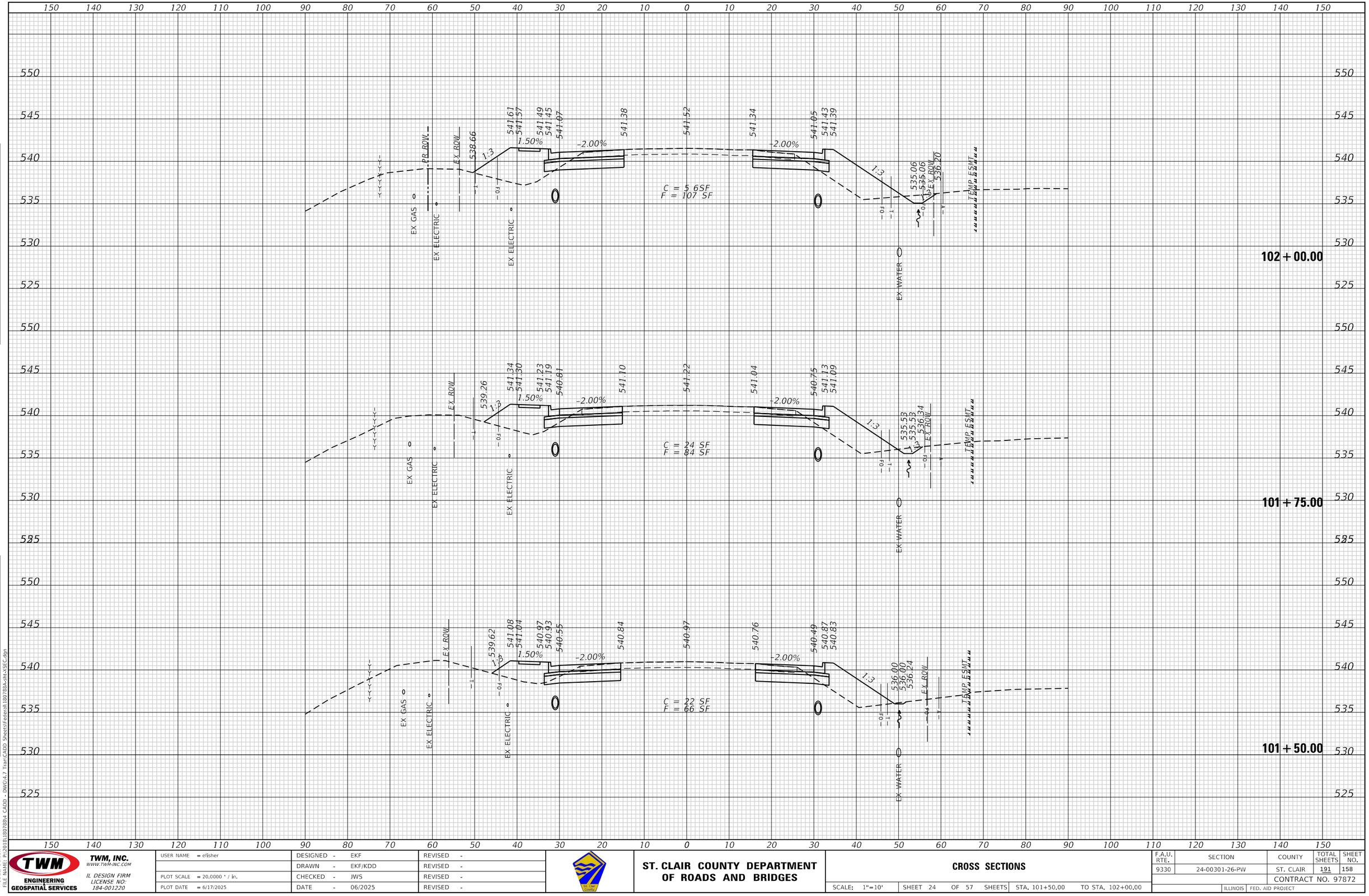

FINAL SURVEY | NOTE BOOK NO. | SURVEYED | PLOTTED | TEMPLATE | AREAS | AREAS CHECKED | BY | DATE

ORIGINAL SURVEY | NOTE BOOK NO. | SURVEYED | PLOTTED | TEMPLATE | AREAS | AREAS CHECKED | BY | DATE

MODEL: Default
FILE NAME: P:\2018\180788\4 CADD - DWG\4.7 Tran\CADD Sheets\Federal\180788A-sht-XSEC.dgn

TWM ENGINEERING & GEOSPATIAL SERVICES
TWM, INC.
WWW.TWM-INC.COM
IL DESIGN FIRM LICENSE NO: 184-001220

USER NAME = efisher	DESIGNED - EKF	REVISED -	
	DRAWN - EKF/KDD	REVISED -	
PLOT SCALE = 20.0000 ' / in.	CHECKED - JWS	REVISED -	
PLOT DATE = 6/17/2025	DATE - 06/2025	REVISED -	

ST. CLAIR COUNTY DEPARTMENT OF ROADS AND BRIDGES

CROSS SECTIONS

SCALE: 1"=10' | SHEET 24 OF 57 SHEETS | STA. 101+50.00 TO STA. 102+00.00

F.A.U. RTE.	SECTION	COUNTY	TOTAL SHEETS	SHEET NO.
9330	24-00301-26-PW	ST. CLAIR	191	158

CONTRACT NO. 97872

ILLINOIS | FED. AID PROJECT

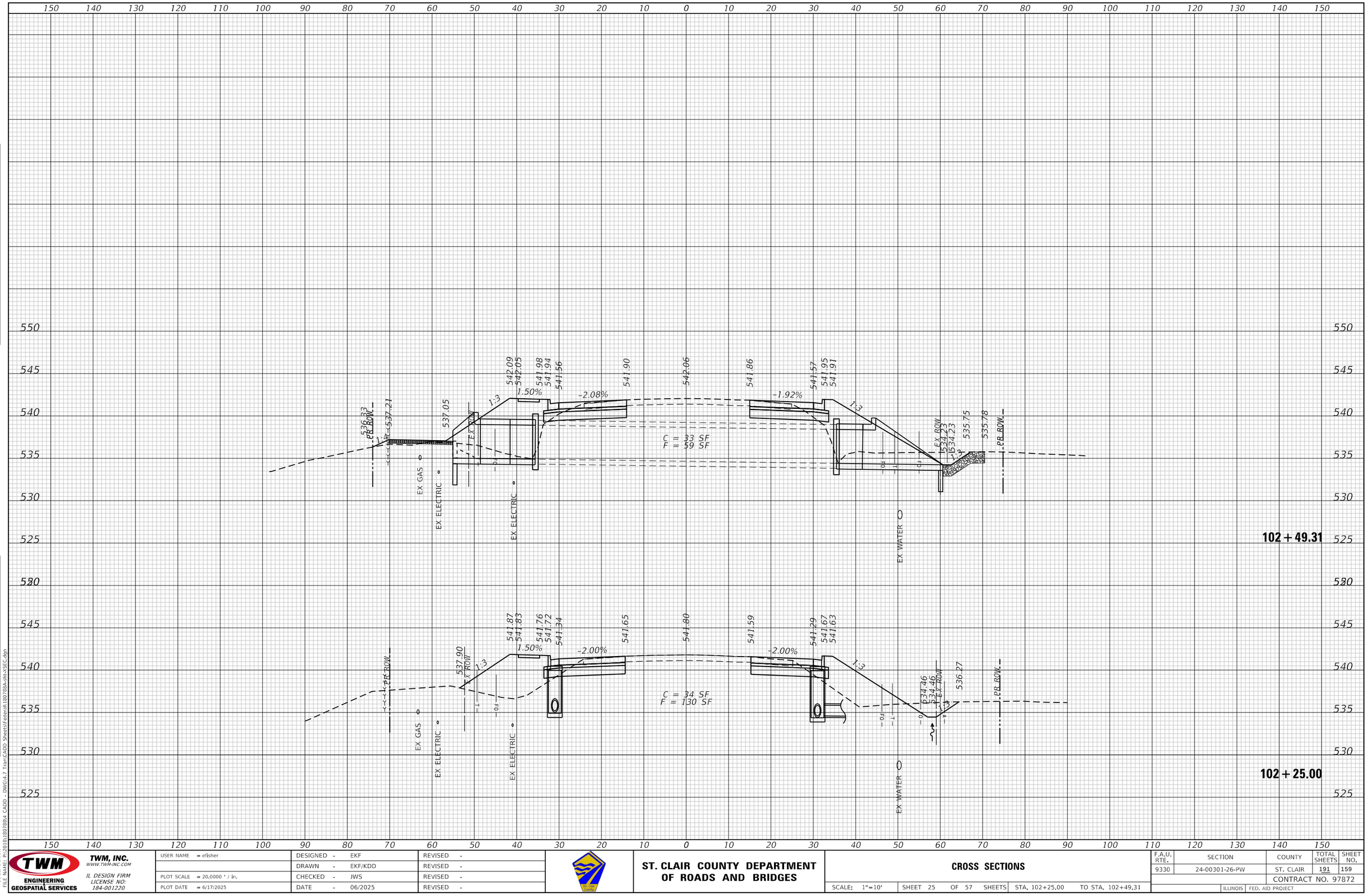

TWM ENGINEERING GEOSPATIAL SERVICES	TWM, INC. WWW.TWM-INC.COM IL DESIGN FIRM LICENSE NO: 184-001220	USER NAME = efisher	DESIGNED - EKF	REVISED -	ST. CLAIR COUNTY DEPARTMENT OF ROADS AND BRIDGES
			DRAWN - EKF/KDD	REVISED -	
		PLOT SCALE = 20.0000 ' / in.	CHECKED - JWS	REVISED -	
		PLOT DATE = 6/17/2025	DATE - 06/2025	REVISED -	

CROSS SECTIONS

SCALE: 1"=10' | SHEET 25 OF 57 SHEETS | STA. 102+25.00 | TO STA. 102+49.31

F.A.U. RTE.	SECTION	COUNTY	TOTAL SHEETS	SHEET NO.
9330	24-00301-26-PW	ST. CLAIR	191	159
		CONTRACT NO. 97872		
		ILLINOIS	FED. AID PROJECT	

FINAL SURVEY — NOTE BOOK — NO. — SURVEYED — PLOTTED — TEMPLATE — AREAS — AREAS CHECKED — BY — DATE

ORIGINAL SURVEY — NOTE BOOK — NO. — SURVEYED — PLOTTED — TEMPLATE — AREAS — AREAS CHECKED — BY — DATE

MODEL: Default
FILE NAME: P:\2018\180788\4 CADD - DWG\4.7 Tran\CADD Sheets\Federal\180788A-Sht-XSEC.dgn

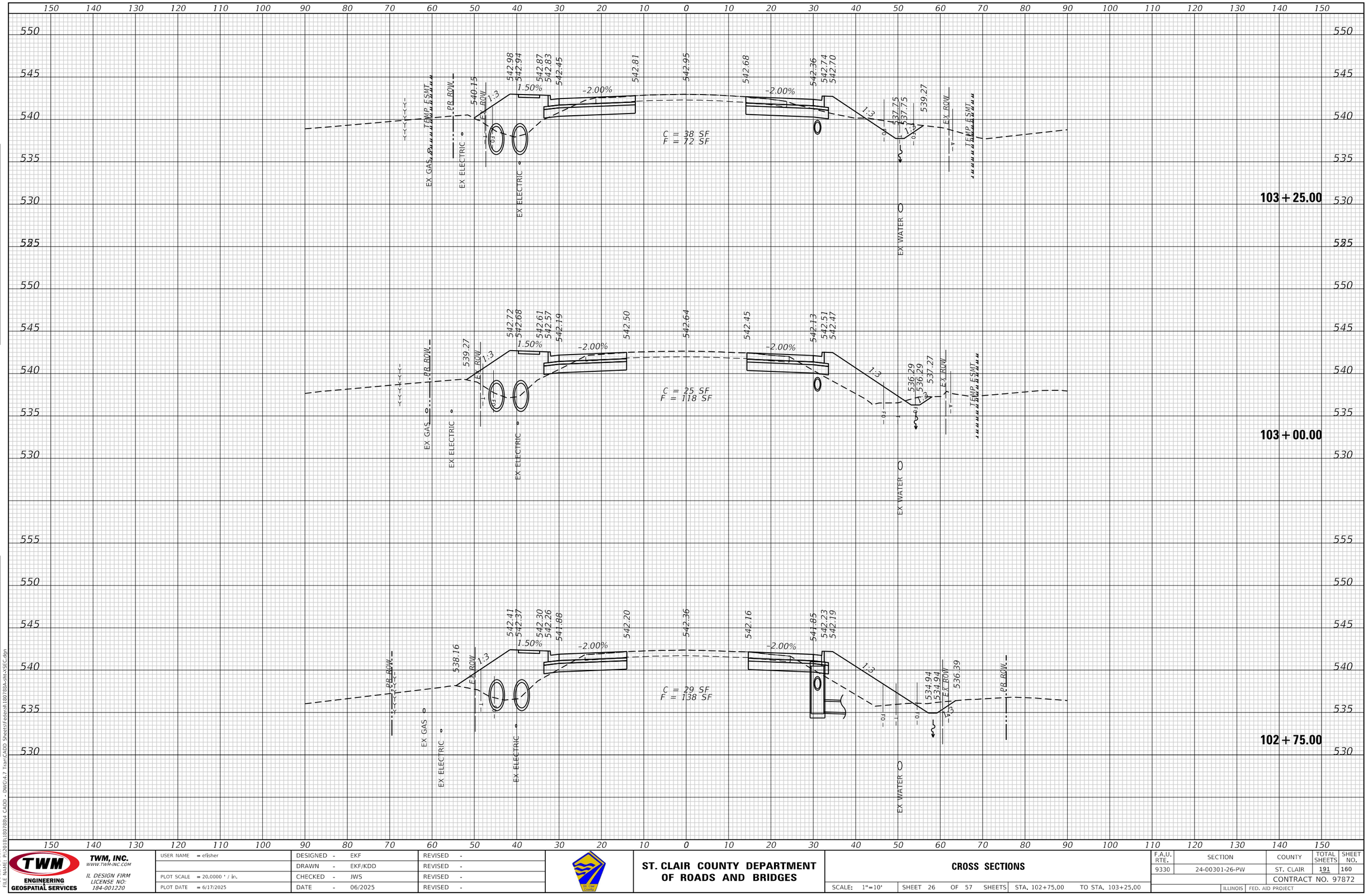

TWM ENGINEERING GEOSPATIAL SERVICES	TWM, INC. WWW.TWM-INC.COM IL DESIGN FIRM LICENSE NO: 184-001220	USER NAME = efisher	DESIGNED - EKF	REVISED -	ST. CLAIR COUNTY DEPARTMENT OF ROADS AND BRIDGES
			DRAWN - EKF/KDD	REVISED -	
		PLOT SCALE = 20.0000 ' / in.	CHECKED - JWS	REVISED -	
		PLOT DATE = 6/17/2025	DATE - 06/2025	REVISED -	

CROSS SECTIONS

SCALE: 1"=10' | SHEET 26 OF 57 SHEETS | STA. 102+75.00 | TO STA. 103+25.00

F.A.U. RTE.	SECTION	COUNTY	TOTAL SHEETS	SHEET NO.
9330	24-00301-26-PW	ST. CLAIR	191	160
		CONTRACT NO. 97872		
		ILLINOIS	FED. AID PROJECT	

FINAL SURVEY — NOTE BOOK — NO. — SURVEYED — PLOTTED — TEMPLATE — AREAS — AREAS CHECKED — BY — DATE

ORIGINAL SURVEY — NOTE BOOK — NO. — SURVEYED — PLOTTED — TEMPLATE — AREAS — AREAS CHECKED — BY — DATE

MODEL: Default
FILE NAME: P:\2018\180788\4 CADD - DWG\4-7 TranCADD Sheets\Federal\180788A-alt-XSEC.dgn

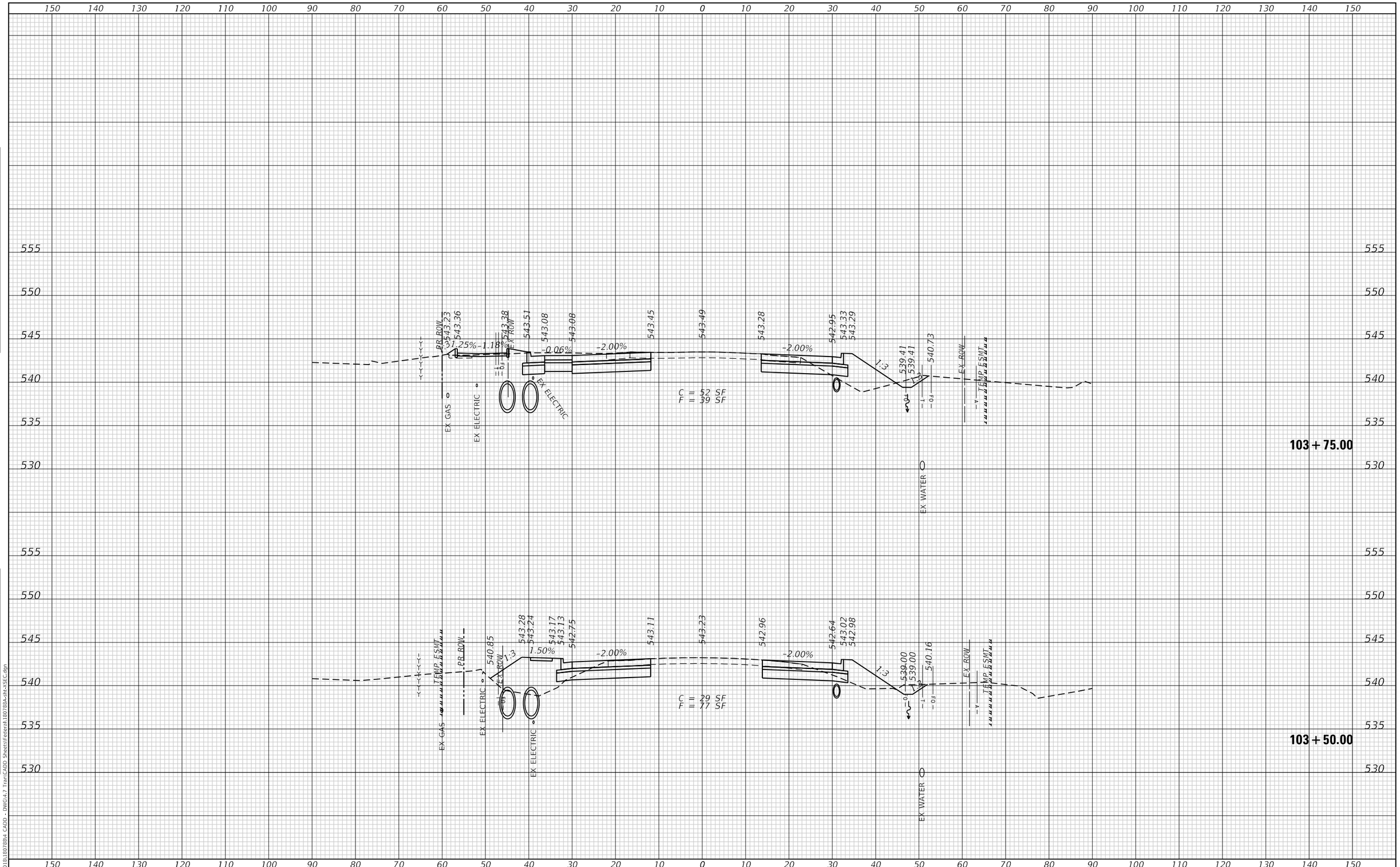

TWM ENGINEERING & GEOSPATIAL SERVICES — TWM, INC. WWW.TWM-INC.COM — IL DESIGN FIRM LICENSE NO: 184-001220	USER NAME = efisher	DESIGNED - EKF	REVISED -	ST. CLAIR COUNTY DEPARTMENT OF ROADS AND BRIDGES	CROSS SECTIONS
		DRAWN - EKF/KDD	REVISED -		
	PLOT SCALE = 20.0000 ' / in.	CHECKED - JWS	REVISED -		
	PLOT DATE = 6/17/2025	DATE - 06/2025	REVISED -		SCALE: 1"=10' SHEET 27 OF 57 SHEETS STA. 103+50.00 TO STA. 103+75.00

F.A.U. RTE.	SECTION	COUNTY	TOTAL SHEETS	SHEET NO.
9330	24-00301-26-PW	ST. CLAIR	191	161
		CONTRACT NO. 97872		
		ILLINOIS	FED. AID PROJECT	

MODEL: Default
FILE NAME: P:\2018\180788\4 CADD - DWG\4.7 Tran\CADD Sheets\Federal\180788A-sht-XSEC.dgn

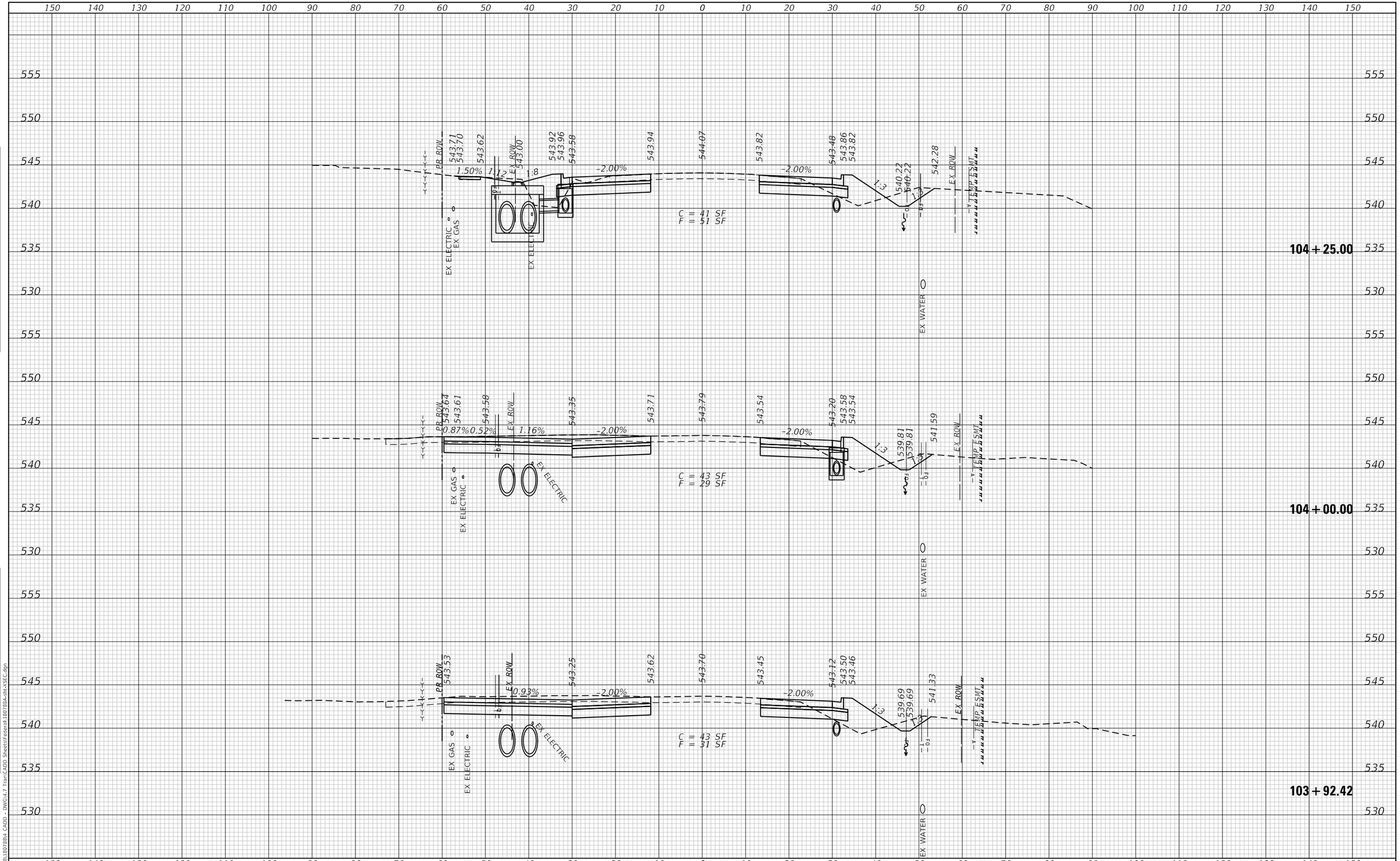

TWM ENGINEERING & GEOSPATIAL SERVICES — TWM, INC. WWW.TWM-INC.COM — IL DESIGN FIRM LICENSE NO: 184-001220	USER NAME = efisher	DESIGNED - EKF	REVISED -	ST. CLAIR COUNTY DEPARTMENT OF ROADS AND BRIDGES	CROSS SECTIONS
		DRAWN - EKF/KDD	REVISED -		
	PLOT SCALE = 20.0000 ' / in.	CHECKED - JWS	REVISED -		
	PLOT DATE = 6/17/2025	DATE - 06/2025	REVISED -		SCALE: 1"=10' SHEET 28 OF 57 SHEETS STA. 103+92.42 TO STA. 104+25.00

F.A.U. RTE.	SECTION	COUNTY	TOTAL SHEETS	SHEET NO.
9330	24-00301-26-PW	ST. CLAIR	191	162
		CONTRACT NO. 97872		
		ILLINOIS FED. AID PROJECT		

FINAL SURVEY — NOTE BOOK NO. — SURVEYED — PLOTTED — TEMPLATE — AREAS — AREAS CHECKED — BY — DATE

ORIGINAL SURVEY — NOTE BOOK NO. — SURVEYED — PLOTTED — TEMPLATE — AREAS — AREAS CHECKED — BY — DATE

MODEL: Default
FILE NAME: P:\2018\180788\4 CADD - DWG\4.7 Tran\CADD Sheets\Federal\180788A-sht-XSEC.dgn

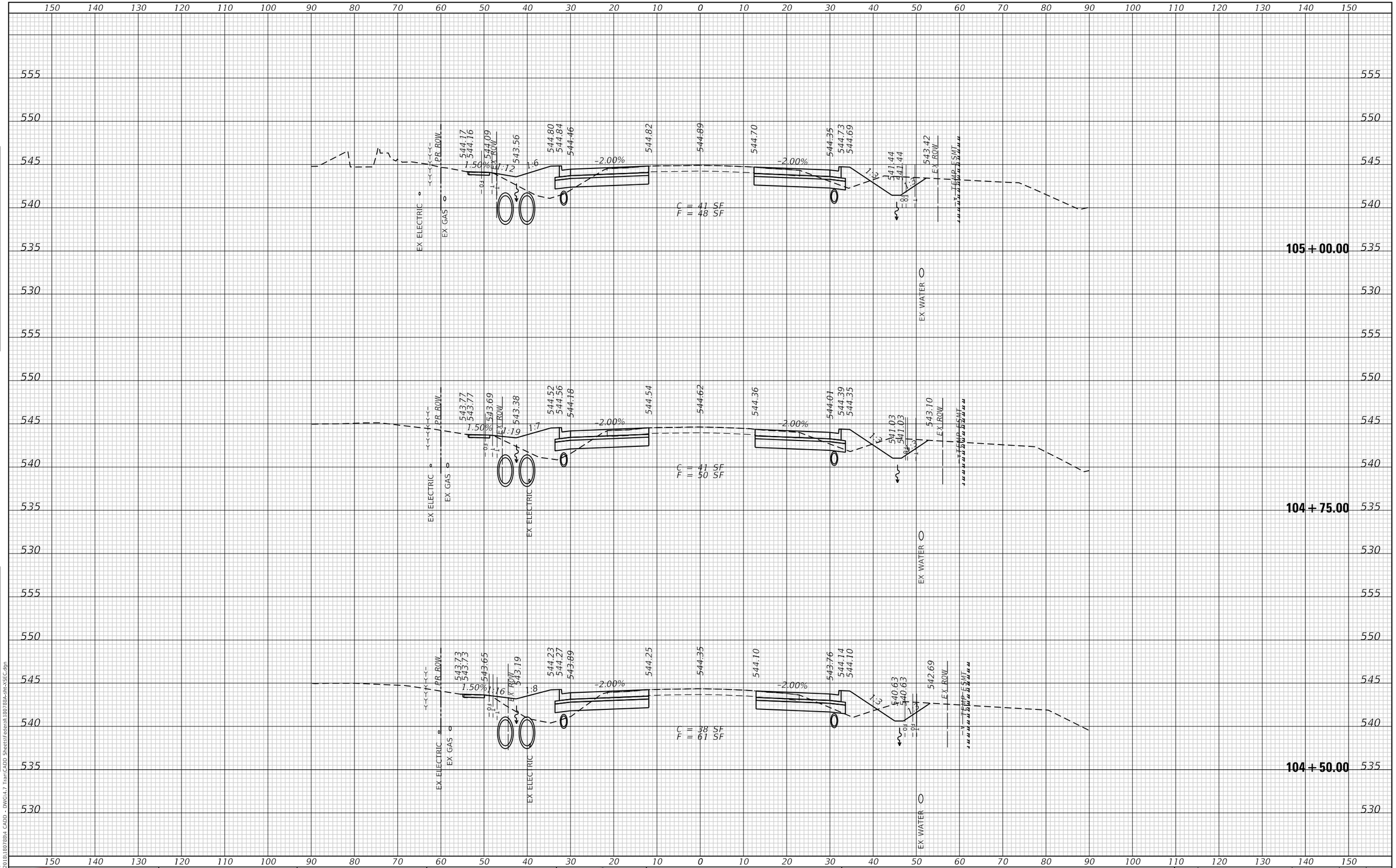

FINAL SURVEY	BY	DATE
NOTE BOOK		
NO.		

SURVEYED
PLOTTED
TEMPLATE
AREAS
AREAS CHECKED

ORIGINAL SURVEY	BY	DATE
NOTE BOOK		
NO.		

SURVEYED
PLOTTED
TEMPLATE
AREAS
AREAS CHECKED

MODEL: Default
FILE NAME: P:\2018\18078\04 CADD - DWG\4-7 Tran\CADD Sheets\Federal\18078A-sht-XSEC.dgn

TWM, INC. WWW.TWM-INC.COM ENGINEERING GEOSPATIAL SERVICES IL DESIGN FIRM LICENSE NO: 184-001220	USER NAME = efisher	DESIGNED - EKF
		DRAWN - EKF/KDD
	PLOT SCALE = 20.0000 ' / in.	CHECKED - JWS
	PLOT DATE = 6/17/2025	DATE - 06/2025

REVISED -	REVISED -	REVISED -
REVISED -	REVISED -	REVISED -
REVISED -	REVISED -	REVISED -

ST. CLAIR COUNTY DEPARTMENT OF ROADS AND BRIDGES

CROSS SECTIONS

SCALE: 1"=10' | SHEET 29 OF 57 SHEETS | STA. 104+50.00 | TO STA. 105+00.00

F.A.U. RTE.	SECTION	COUNTY	TOTAL SHEETS	SHEET NO.
9330	24-00301-26-PW	ST. CLAIR	191	163
		CONTRACT NO. 97872		
		ILLINOIS	FED. AID PROJECT	

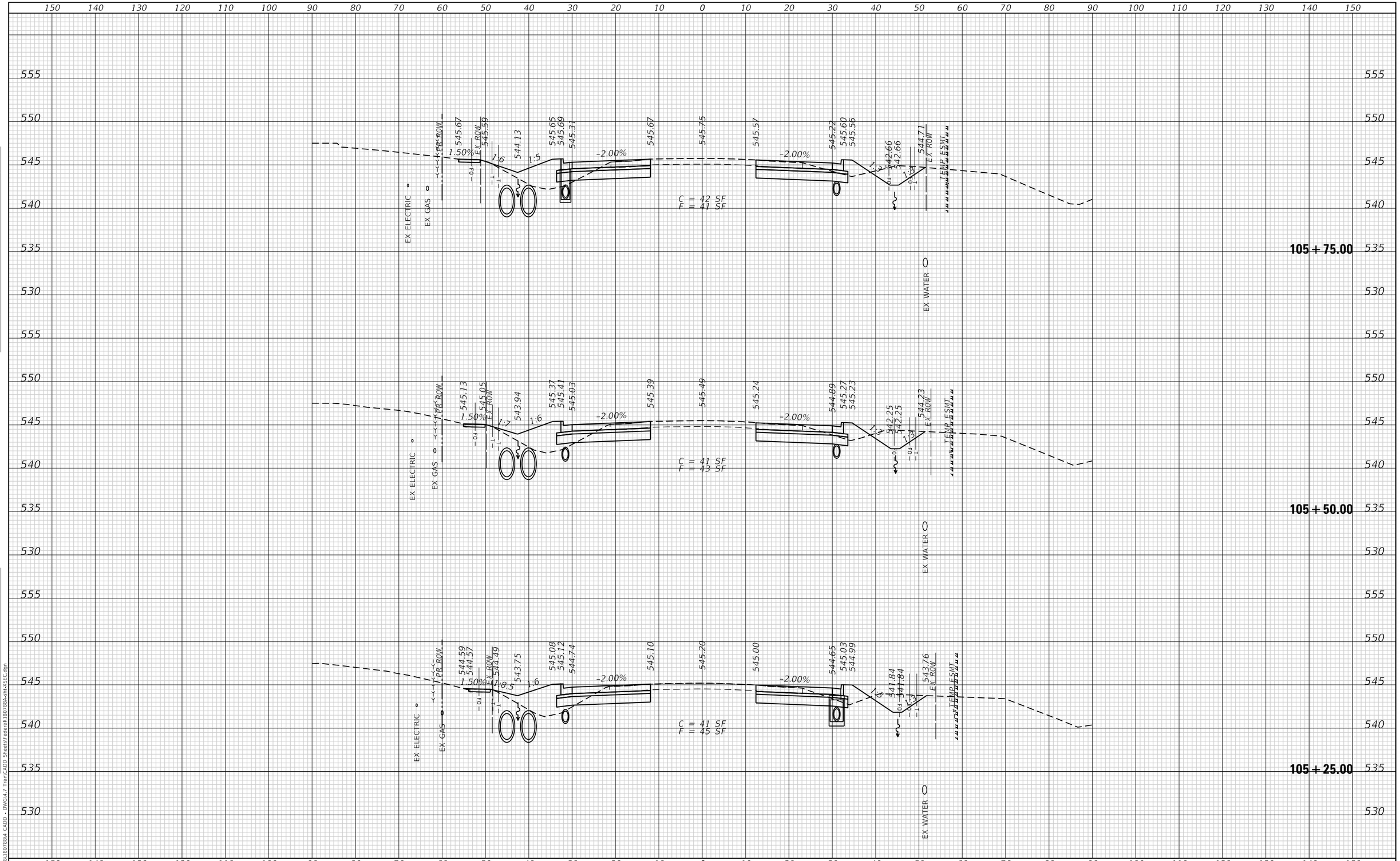

TWM, INC. WWW.TWM-INC.COM ENGINEERING GEOSPATIAL SERVICES	IL DESIGN FIRM LICENSE NO: 184-001220	USER NAME = efisher	DESIGNED - EKF	REVISED -	ST. CLAIR COUNTY DEPARTMENT OF ROADS AND BRIDGES
			DRAWN - EKF/KDD	REVISED -	
		PLOT SCALE = 20.0000 ' / in.	CHECKED - JWS	REVISED -	
		PLOT DATE = 6/17/2025	DATE - 06/2025	REVISED -	

CROSS SECTIONS

SCALE: 1"=10' | SHEET 30 OF 57 SHEETS | STA. 105+25.00 | TO STA. 105+75.00

F.A.U. RTE.	SECTION	COUNTY	TOTAL SHEETS	SHEET NO.
9330	24-00301-26-PW	ST. CLAIR	191	164
		CONTRACT NO. 97872		
		ILLINOIS	FED. AID PROJECT	

FINAL SURVEY — NOTE BOOK — NO. — SURVEYED — PLOTTED — TEMPLATE — AREAS — AREAS CHECKED — BY — DATE

ORIGINAL SURVEY — NOTE BOOK — NO. — SURVEYED — PLOTTED — TEMPLATE — AREAS — AREAS CHECKED — BY — DATE

MODEL: Default
FILE NAME: P:\2018\180788\4 CADD - DWG\4-7 Tran\CADD Sheets\Federal\180788A-clht-XSEC.dgn

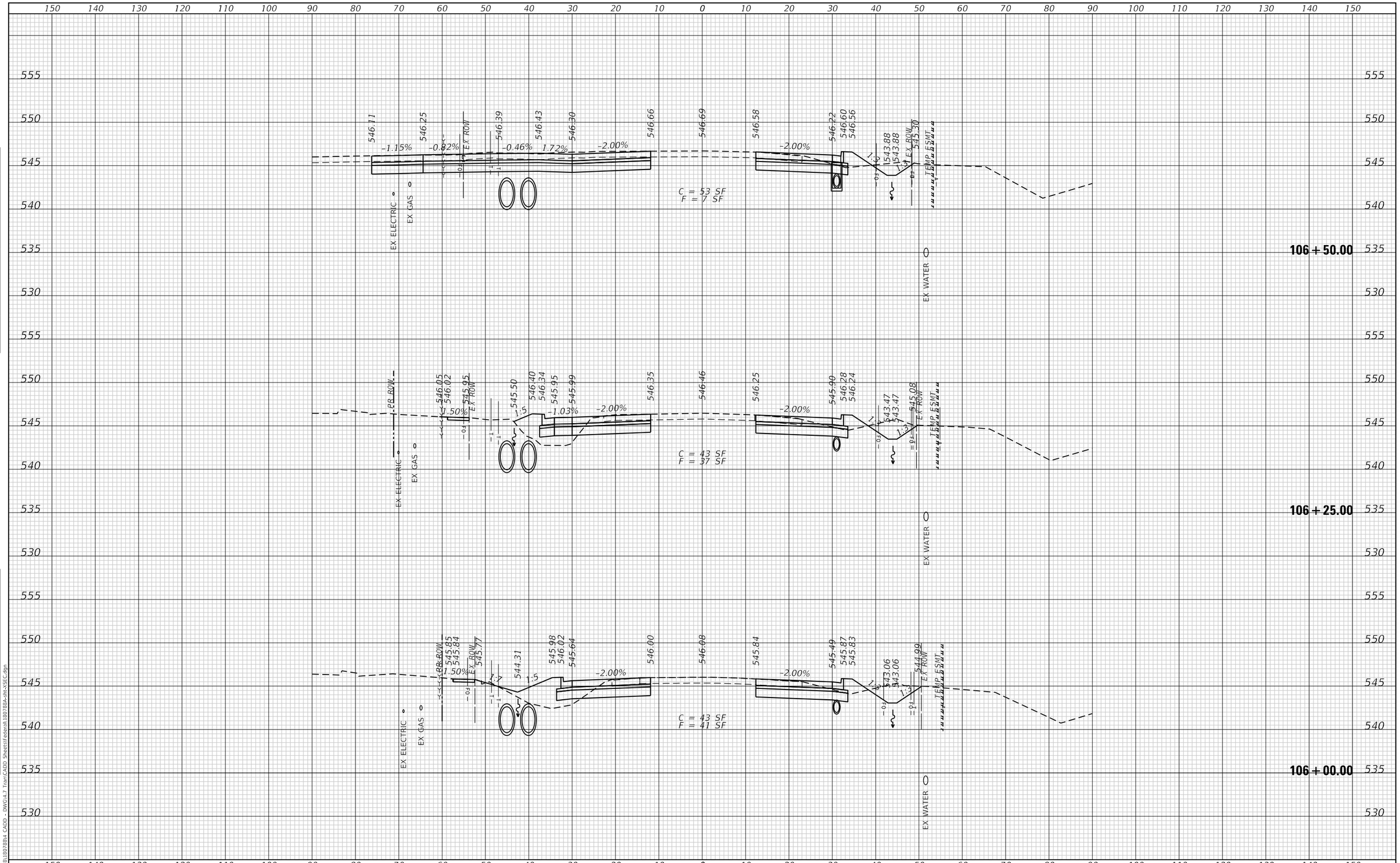

FINAL SURVEY		BY	DATE
NOTE BOOK NO.	SURVEYED		
	PLOTTED		
	TEMPLATE		
	AREAS		
	AREAS CHECKED		

ORIGINAL SURVEY		BY	DATE
NOTE BOOK NO.	SURVEYED		
	PLOTTED		
	TEMPLATE		
	AREAS		
	AREAS CHECKED		

MODEL: Default
FILE NAME: P:\2018\180788\4 CADD - DWG\4.7 Tran\CADD Sheets\Federal\180788A-sht-XSEC.dgn

TWM ENGINEERING & GEOSPATIAL SERVICES
TWM, INC.
WWW.TWM-INC.COM
IL DESIGN FIRM LICENSE NO: 184-001220

USER NAME = efisher	DESIGNED - EKF	REVISED -	
	DRAWN - EKF/KDD	REVISED -	
PLOT SCALE = 20.0000 ' / in.	CHECKED - JWS	REVISED -	
PLOT DATE = 6/17/2025	DATE - 06/2025	REVISED -	

ST. CLAIR COUNTY DEPARTMENT OF ROADS AND BRIDGES

CROSS SECTIONS

SCALE: 1"=10' | SHEET 31 OF 57 SHEETS | STA. 106+00.00 TO STA. 106+50.00

F.A.U. RTE.	SECTION	COUNTY	TOTAL SHEETS	SHEET NO.
9330	24-00301-26-PW	ST. CLAIR	191	165
		CONTRACT NO. 97872		
		ILLINOIS	FED. AID PROJECT	

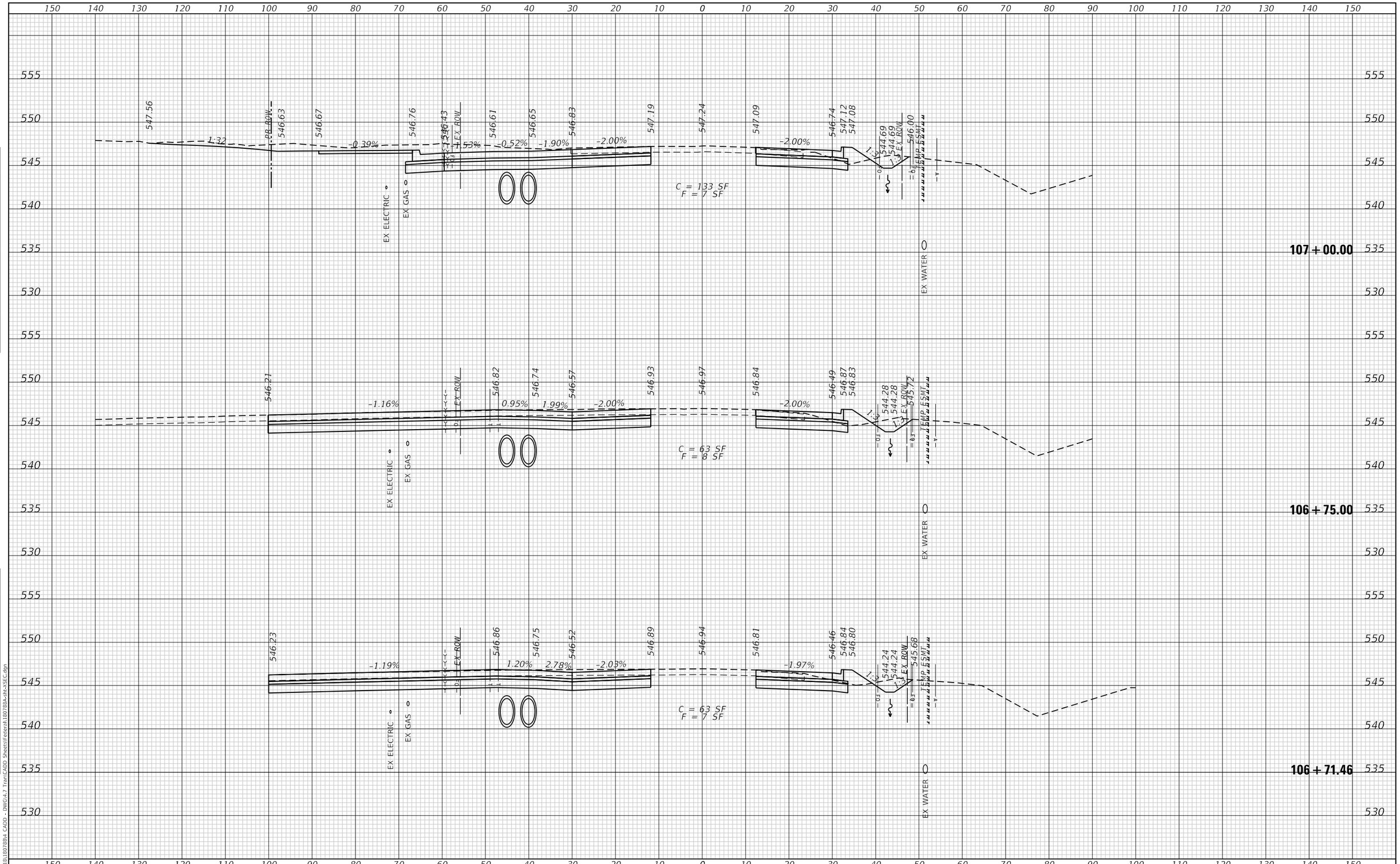

TWM ENGINEERING GEOSPATIAL SERVICES	TWM, INC. WWW.TWM-INC.COM IL DESIGN FIRM LICENSE NO: 184-001220	USER NAME = efisher	DESIGNED - EKF	REVISED -	ST. CLAIR COUNTY DEPARTMENT OF ROADS AND BRIDGES
			DRAWN - EKF/KDD	REVISED -	
		PLOT SCALE = 20.0000 ' / in.	CHECKED - JWS	REVISED -	
		PLOT DATE = 6/17/2025	DATE - 06/2025	REVISED -	

CROSS SECTIONS

SCALE: 1"=10' | SHEET 32 OF 57 SHEETS | STA. 106+71.46 | TO STA. 107+00.00

F.A.U. RTE.	SECTION	COUNTY	TOTAL SHEETS	SHEET NO.
9330	24-00301-26-PW	ST. CLAIR	191	166
		CONTRACT NO. 97872		
		ILLINOIS	FED. AID PROJECT	

FINAL SURVEY — NOTE BOOK — NO. — BY — DATE — SURVEYED — PLOTTED — TEMPLATE — AREAS — AREAS CHECKED

ORIGINAL SURVEY — NOTE BOOK — NO. — BY — DATE — SURVEYED — PLOTTED — TEMPLATE — AREAS — AREAS CHECKED

MODEL: Default
FILE NAME: P:\2018\180780\4 CADD - DWG\4-7 Tran\CADD Sheets\Federal\180780A-tht-XSEC.dgn

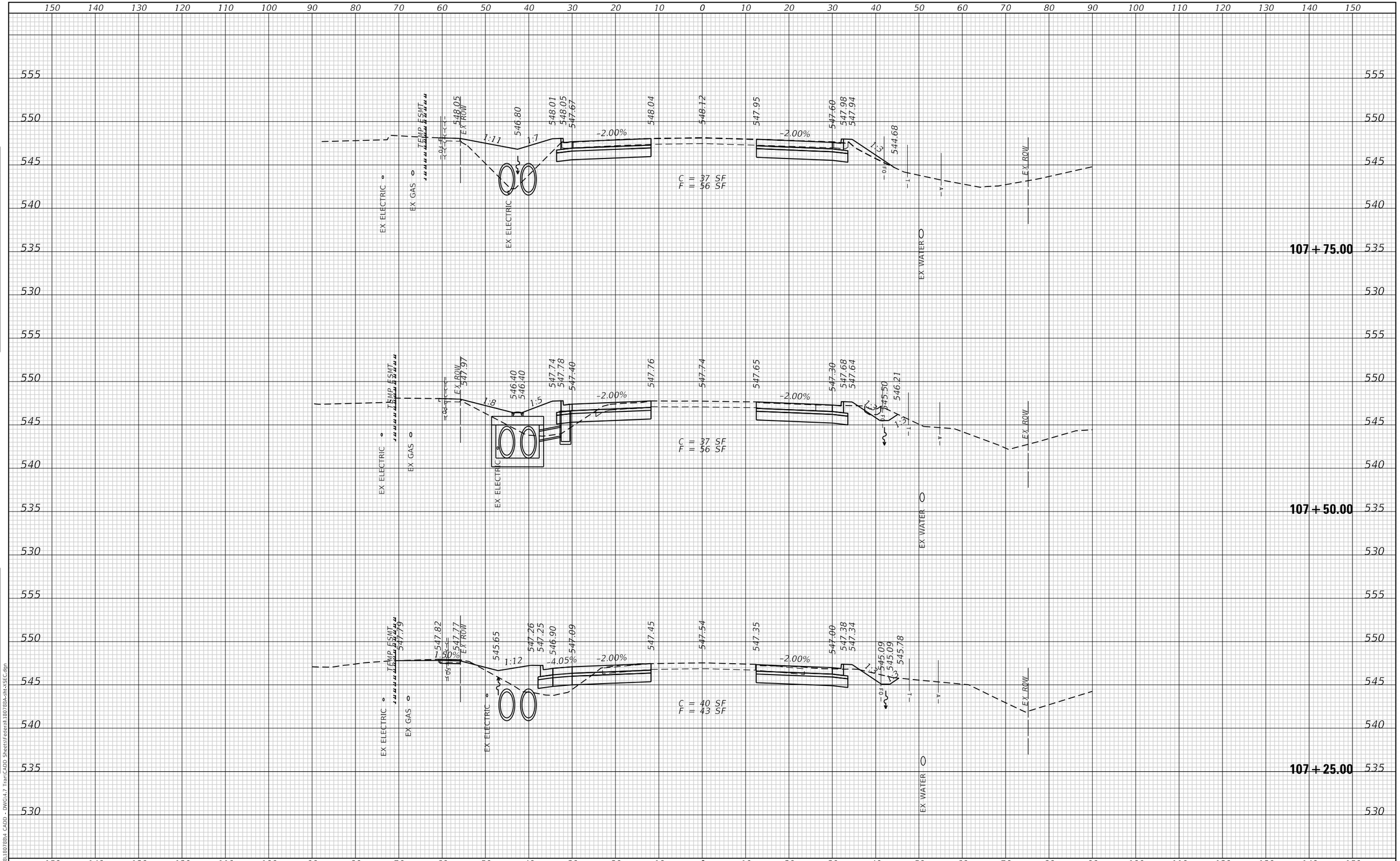

USER NAME = efisher	DESIGNED - EKF	REVISED -	
	DRAWN - EKF/KDD	REVISED -	
PLOT SCALE = 20.0000 ' / in.	CHECKED - JWS	REVISED -	
PLOT DATE = 6/17/2025	DATE - 06/2025	REVISED -	

TWM, INC. WWW.TWM-INC.COM
ENGINEERING GEOSPATIAL SERVICES
IL DESIGN FIRM LICENSE NO: 184-001220

ST. CLAIR COUNTY DEPARTMENT OF ROADS AND BRIDGES

CROSS SECTIONS

SCALE: 1"=10' | SHEET 33 OF 57 SHEETS | STA. 107+25.00 TO STA. 107+75.00

F.A.U. RTE.	SECTION	COUNTY	TOTAL SHEETS	SHEET NO.
9330	24-00301-26-PW	ST. CLAIR	191	167
		CONTRACT NO. 97872		
		ILLINOIS	FED. AID PROJECT	

FINAL SURVEY — NOTE BOOK — NO. — SURVEYED — PLOTTED — TEMPLATE — AREAS — AREAS CHECKED — BY — DATE

ORIGINAL SURVEY — NOTE BOOK — NO. — SURVEYED — PLOTTED — TEMPLATE — AREAS — AREAS CHECKED — BY — DATE

MODEL: Default
FILE NAME: P:\2018\180788\4 CADD - DWG\4-7 Tran\CADD Sheets\Federal\180788A-clht-XSEC.dgn

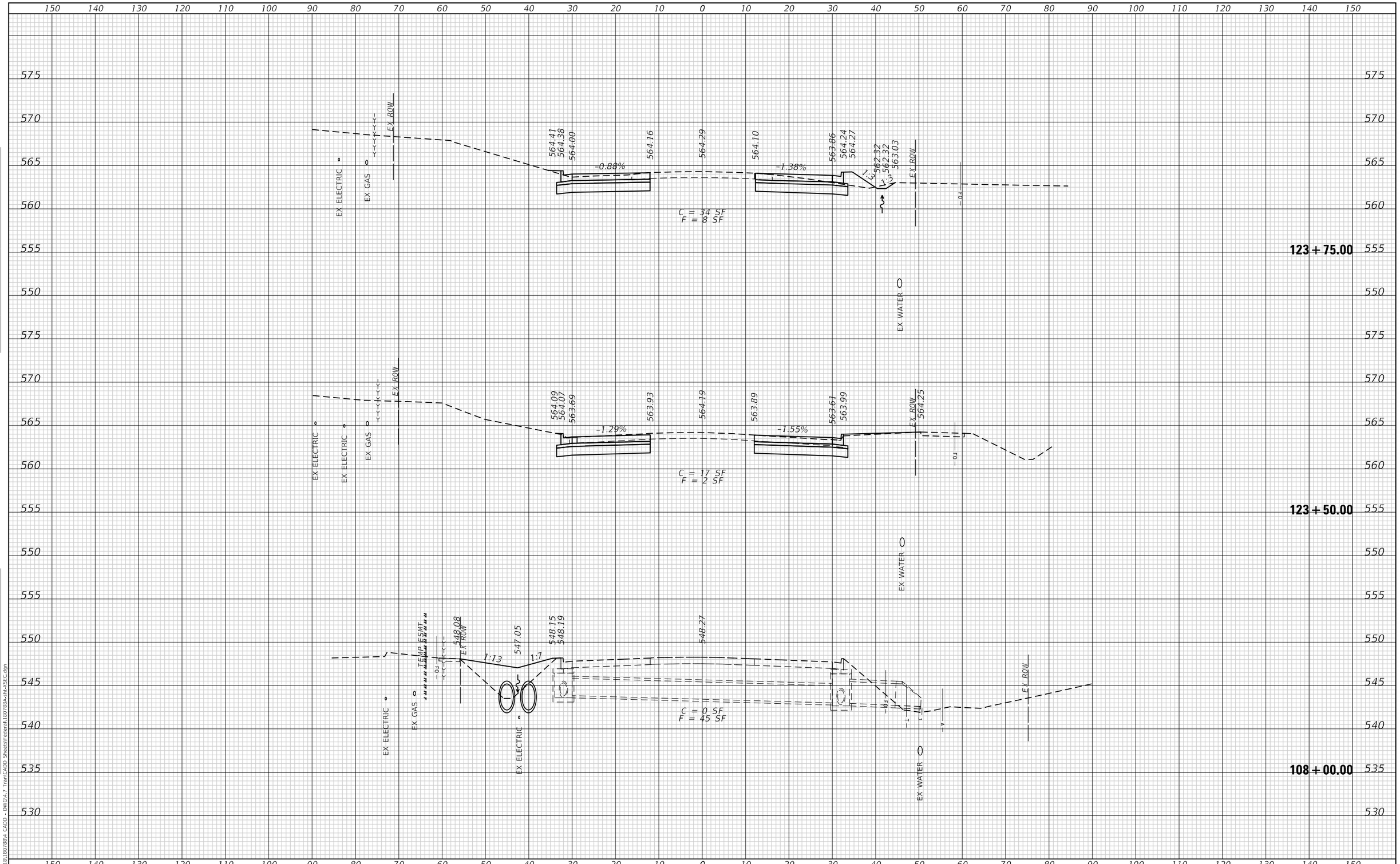

USER NAME = efisher	DESIGNED - EKF	REVISED -	
	DRAWN - EKF/KDD	REVISED -	
PLOT SCALE = 20.0000 ' / in.	CHECKED - JWS	REVISED -	
PLOT DATE = 6/17/2025	DATE - 06/2025	REVISED -	

TWM, INC. WWW.TWM-INC.COM — ENGINEERING GEOSPATIAL SERVICES — IL DESIGN FIRM LICENSE NO: 184-001220

ST. CLAIR COUNTY DEPARTMENT OF ROADS AND BRIDGES

CROSS SECTIONS

SCALE: 1"=10' | SHEET 34 OF 57 SHEETS | STA. 108+00.00 TO STA. 123+75.00

F.A.U. RTE.	SECTION	COUNTY	TOTAL SHEETS	SHEET NO.
9330	24-00301-26-PW	ST. CLAIR	191	168
		CONTRACT NO. 97872		
		ILLINOIS	FED. AID PROJECT	

FINAL SURVEY — NOTE BOOK — NO. — BY — DATE — SURVEYED — PLOTTED — TEMPLATE — AREAS — AREAS CHECKED

ORIGINAL SURVEY — NOTE BOOK — NO. — BY — DATE — SURVEYED — PLOTTED — TEMPLATE — AREAS — AREAS CHECKED

MODEL: Default
FILE NAME: P:\2018\180788\4 CADD - DWG\4.7 Tran\CADD Sheets\Federal\180788A-tht-XSEC.dgn

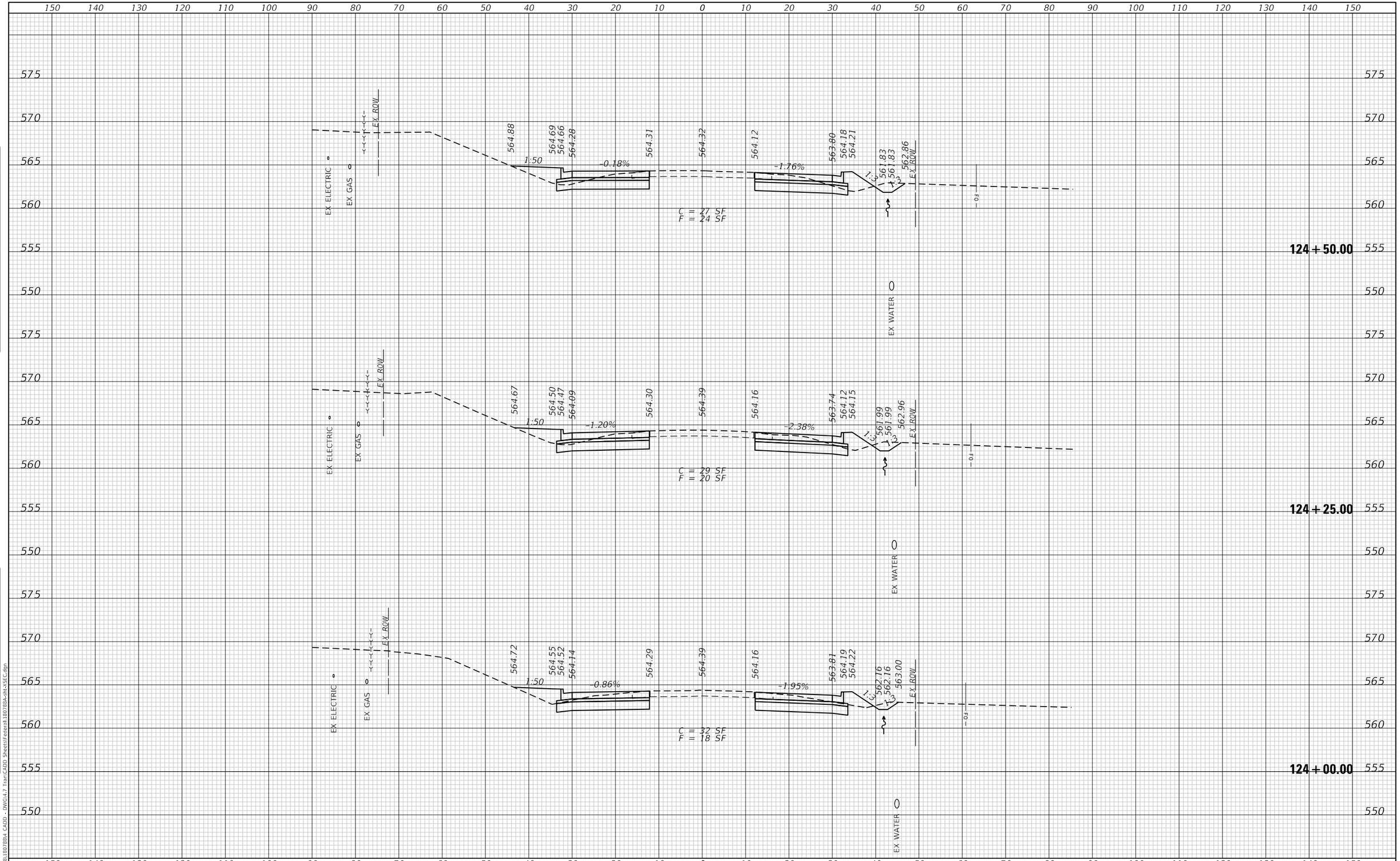

USER NAME = efisher	DESIGNED - EKF	REVISED -	
	DRAWN - EKF/KDD	REVISED -	
PLOT SCALE = 20.0000 ' / in.	CHECKED - JWS	REVISED -	
PLOT DATE = 6/17/2025	DATE - 06/2025	REVISED -	

TWM, INC.
WWW.TWM-INC.COM
ENGINEERING
GEOSPATIAL SERVICES
IL DESIGN FIRM
LICENSE NO:
184-001220

ST. CLAIR COUNTY DEPARTMENT OF ROADS AND BRIDGES

CROSS SECTIONS

SCALE: 1"=10' | SHEET 35 OF 57 SHEETS | STA. 124+00.00 | TO STA. 124+50.00

F.A.U. RTE.	SECTION	COUNTY	TOTAL SHEETS	SHEET NO.
9330	24-00301-26-PW	ST. CLAIR	191	169
		CONTRACT NO. 97872		
		ILLINOIS	FED. AID PROJECT	

FINAL SURVEY
NOTE BOOK
NO.
SURVEYED
PLOTTED
TEMPLATE
AREAS
AREAS CHECKED
BY
DATE

ORIGINAL SURVEY
NOTE BOOK
NO.
SURVEYED
PLOTTED
TEMPLATE
AREAS
AREAS CHECKED
BY
DATE

MODEL: Default
FILE NAME: P:\2018\180788\4 CADD - DWG\4-7 Tran\CADD Sheets\Federal\180788A-sht-xSEC.dgn

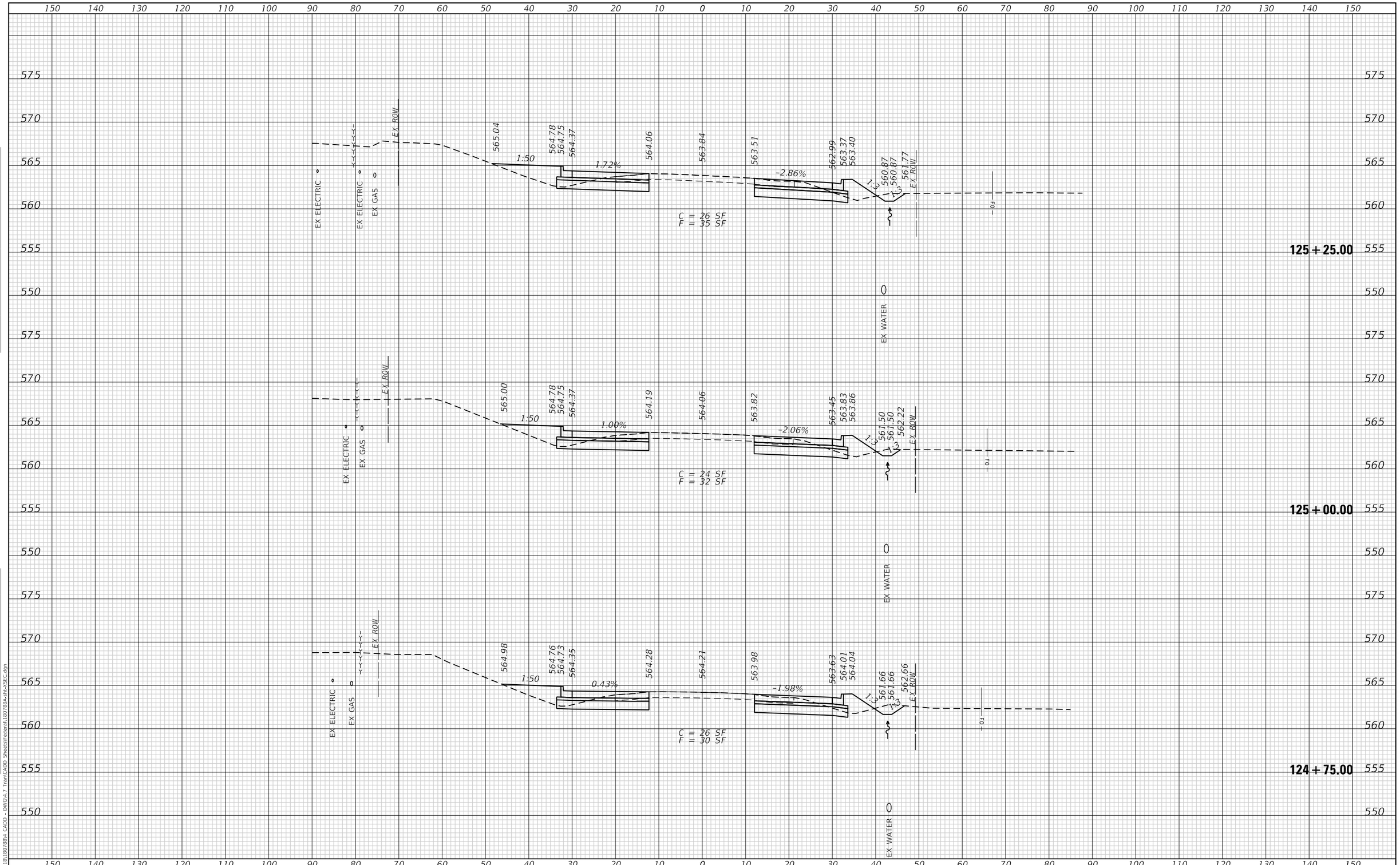

FINAL SURVEY	NOTE BOOK	NO.	BY	DATE
	SURVEYED			
	PLOTTED			
	TEMPLATE			
	AREAS			
	AREAS CHECKED			

ORIGINAL SURVEY	NOTE BOOK	NO.	BY	DATE
	SURVEYED			
	PLOTTED			
	TEMPLATE			
	AREAS			
	AREAS CHECKED			

MODEL: Default
FILE NAME: P:\2018\180788\04 CADD - DWG\4.7 Trans\CADD Sheets\Federal\180788A-sht-XSEC.dgn

TWM ENGINEERING GEOSPATIAL SERVICES
TWM, INC.
WWW.TWM-INC.COM
IL DESIGN FIRM LICENSE NO: 184-001220

USER NAME = efisher	DESIGNED - EKF	REVISED -	
	DRAWN - EKF/KDD	REVISED -	
PLOT SCALE = 20.0000 ' / in.	CHECKED - JWS	REVISED -	
PLOT DATE = 6/17/2025	DATE - 06/2025	REVISED -	

ST. CLAIR COUNTY DEPARTMENT OF ROADS AND BRIDGES

CROSS SECTIONS

SCALE: 1"=10' | SHEET 36 OF 57 SHEETS | STA. 124+75.00 | TO STA. 125+25.00

F.A.U. RTE.	SECTION	COUNTY	TOTAL SHEETS	SHEET NO.
9330	24-00301-26-PW	ST. CLAIR	191	170
		CONTRACT NO. 97872		
		ILLINOIS	FED. AID PROJECT	

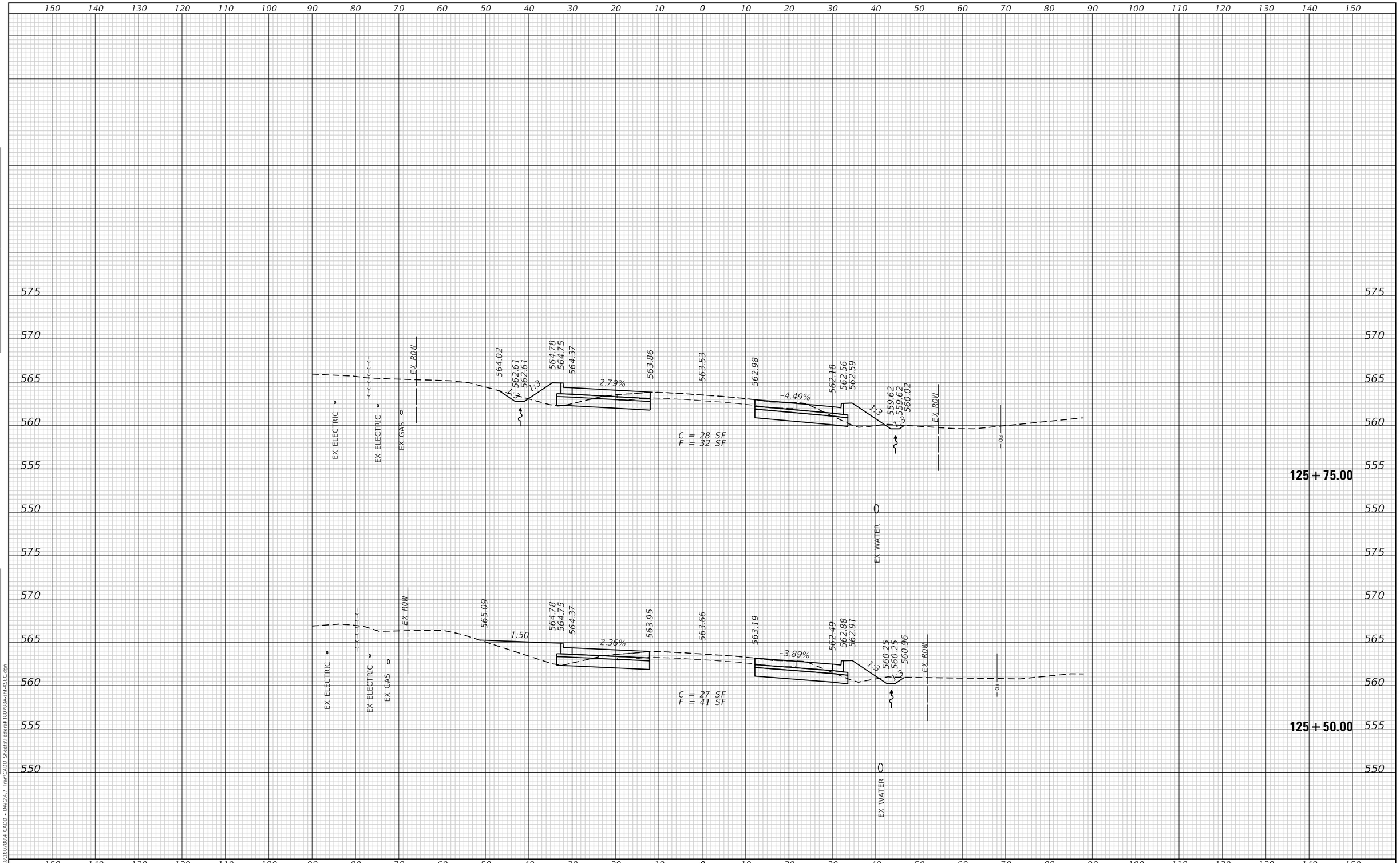

FINAL SURVEY | NOTE BOOK | NO. | SURVEYED | PLOTTED | TEMPLATE | AREAS | AREAS CHECKED | BY | DATE

ORIGINAL SURVEY | NOTE BOOK | NO. | SURVEYED | PLOTTED | TEMPLATE | AREAS | AREAS CHECKED | BY | DATE

MODEL: Default
FILE NAME: P:\2018\180788\4 CADD - DWG\4.7 Tran\CADD Sheets\Federal\180788A-sht-XSEC.dgn

TWM ENGINEERING & GEOSPATIAL SERVICES
TWM, INC.
WWW.TWM-INC.COM
IL DESIGN FIRM LICENSE NO: 184-001220

USER NAME = efisher	DESIGNED - EKF	REVISED -	
	DRAWN - EKF/KDD	REVISED -	
PLOT SCALE = 20.0000 ' / in.	CHECKED - JWS	REVISED -	
PLOT DATE = 6/17/2025	DATE - 06/2025	REVISED -	

ST. CLAIR COUNTY DEPARTMENT OF ROADS AND BRIDGES

CROSS SECTIONS

SCALE: 1"=10' | SHEET 37 OF 57 SHEETS | STA. 125+50.00 TO STA. 125+75.00

F.A.U. RTE.	SECTION	COUNTY	TOTAL SHEETS	SHEET NO.
9330	24-00301-26-PW	ST. CLAIR	191	171

CONTRACT NO. 97872

ILLINOIS | FED. AID PROJECT

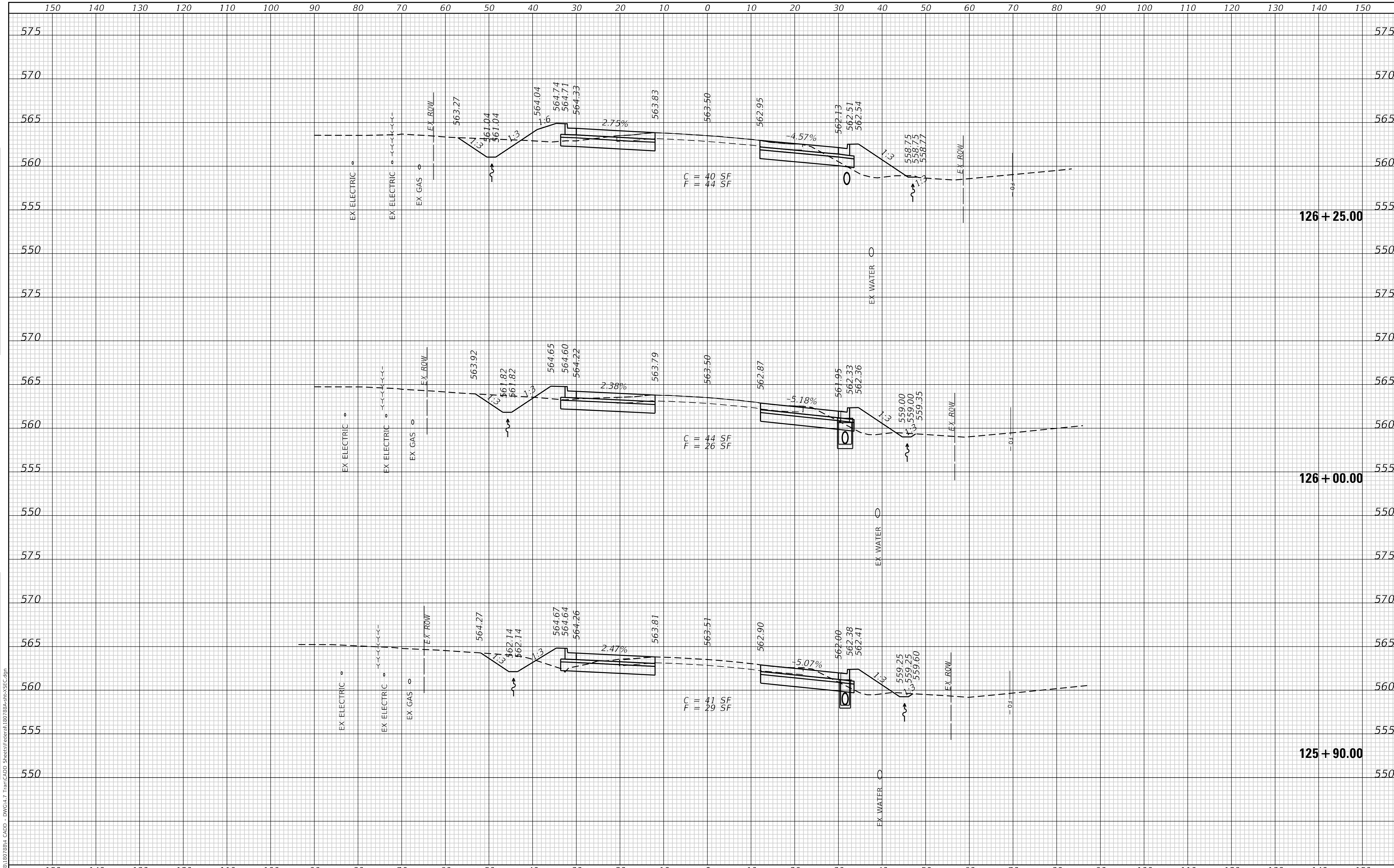

FINAL SURVEY — NOTE BOOK, NO. — SURVEYED, PLOTTED, TEMPLATE, AREAS, AREAS CHECKED — BY — DATE

ORIGINAL SURVEY — NOTE BOOK, NO. — SURVEYED, PLOTTED, TEMPLATE, AREAS, AREAS CHECKED — BY — DATE

MODEL: Default
FILE NAME: P:\2018\180788\4 CADD - DWG\4.7 Tran\CADD Sheets\Federal\180788A-sht-XSEC.dgn

TWM, INC.
WWW.TWM-INC.COM
ENGINEERING & GEOSPATIAL SERVICES
IL DESIGN FIRM LICENSE NO: 184-001220

USER NAME = efisher	DESIGNED - EKF	REVISED -
	DRAWN - EKF/KDD	REVISED -
PLOT SCALE = 20.0000 ' / in.	CHECKED - JWS	REVISED -
PLOT DATE = 6/17/2025	DATE - 06/2025	REVISED -

ST. CLAIR COUNTY DEPARTMENT OF ROADS AND BRIDGES

CROSS SECTIONS

SCALE: 1"=10' | SHEET 38 OF 57 SHEETS | STA. 125+90.00 TO STA. 126+25.00

F.A.U. RTE.	SECTION	COUNTY	TOTAL SHEETS	SHEET NO.
9330	24-00301-26-PW	ST. CLAIR	191	172
		CONTRACT NO. 97872		
		ILLINOIS	FED. AID PROJECT	

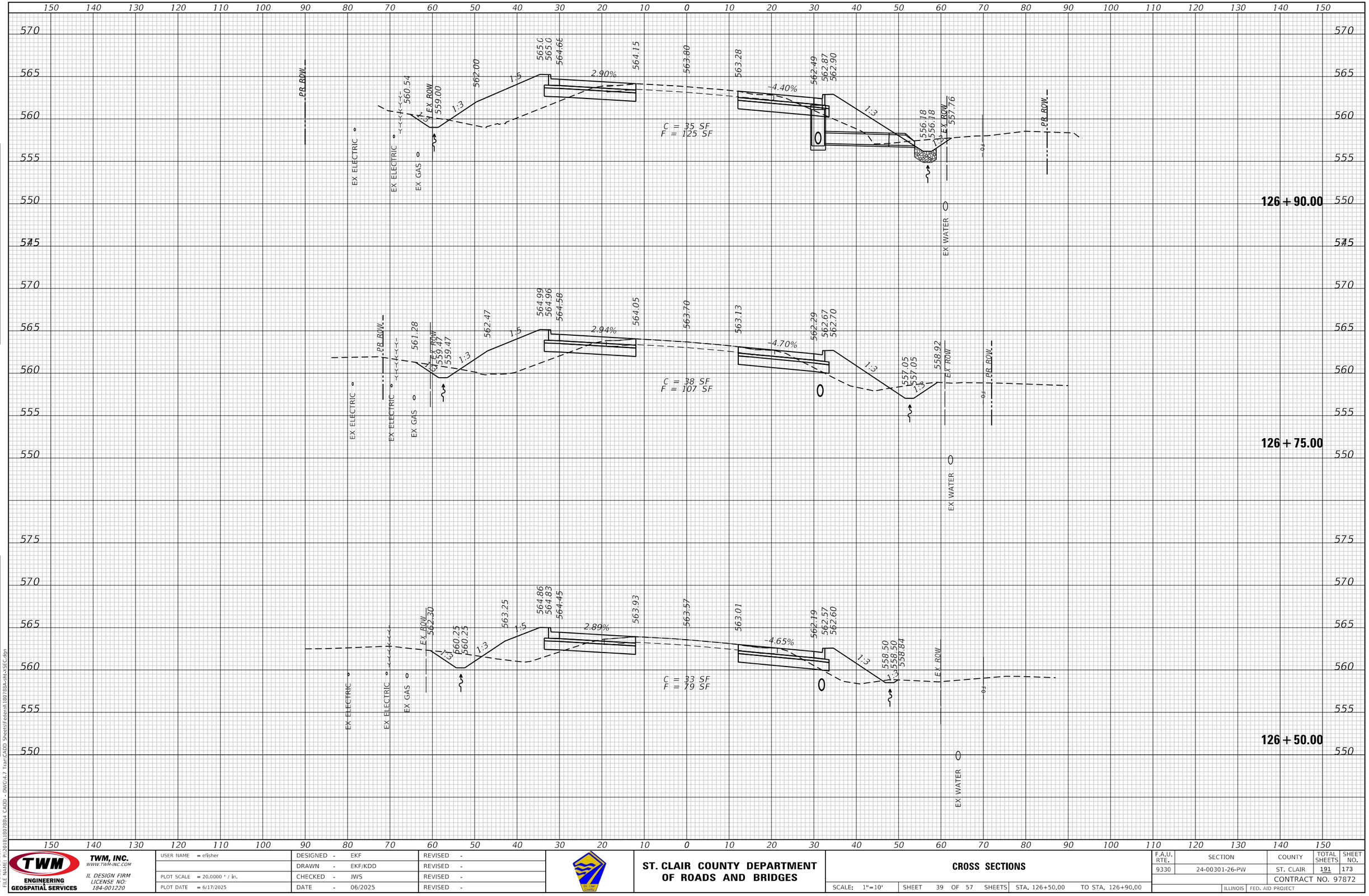

TWM ENGINEERING GEOSPATIAL SERVICES	TWM, INC. WWW.TWM-INC.COM IL DESIGN FIRM LICENSE NO: 184-001220	USER NAME = efisher	DESIGNED - EKF	REVISED -	ST. CLAIR COUNTY DEPARTMENT OF ROADS AND BRIDGES
			DRAWN - EKF/KDD	REVISED -	
		PLOT SCALE = 20.0000 ' / in.	CHECKED - JWS	REVISED -	
		PLOT DATE = 6/17/2025	DATE - 06/2025	REVISED -	

CROSS SECTIONS

SCALE: 1"=10' | SHEET 39 OF 57 SHEETS | STA. 126+50.00 | TO STA. 126+90.00

F.A.U. RTE.	SECTION	COUNTY	TOTAL SHEETS	SHEET NO.
9330	24-00301-26-PW	ST. CLAIR	191	173
		CONTRACT NO. 97872		
		ILLINOIS	FED. AID PROJECT	

FINAL SURVEY — NOTE BOOK — NO. — SURVEYED — PLOTTED — TEMPLATE — AREAS — AREAS CHECKED — BY — DATE

ORIGINAL SURVEY — NOTE BOOK — NO. — SURVEYED — PLOTTED — TEMPLATE — AREAS — AREAS CHECKED — BY — DATE

MODEL: Default
FILE NAME: P:\2018\180788\d CADD - DWG\4.7 Trans\CADD Sheets\Federal\180788x-bh1-XSEC.dgn

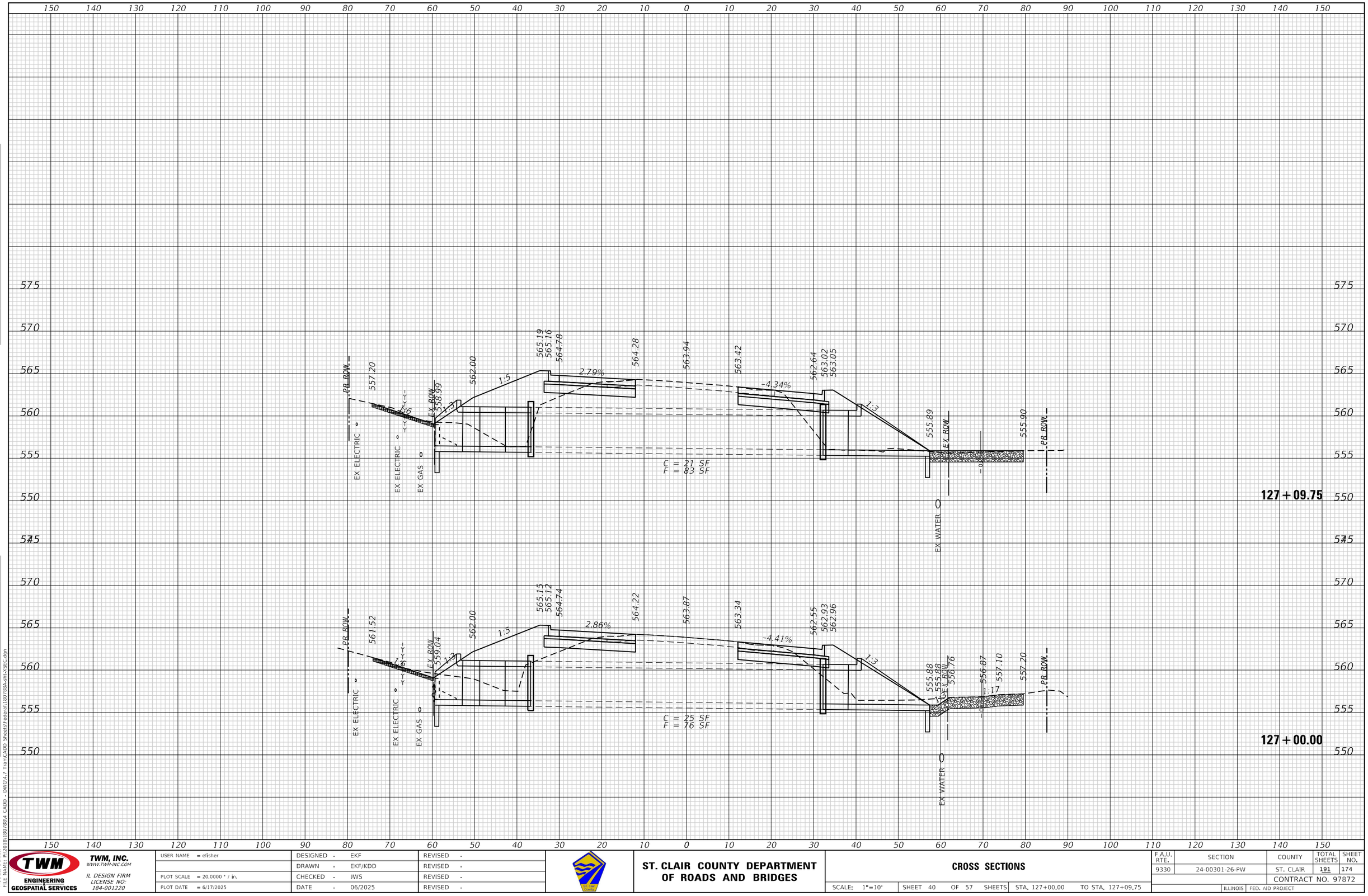

FINAL SURVEY		BY	DATE
NOTE BOOK NO.	SURVEYED		
	PLOTTED		
	TEMPLATE		
	AREAS		
	AREAS CHECKED		

ORIGINAL SURVEY		BY	DATE
NOTE BOOK NO.	SURVEYED		
	PLOTTED		
	TEMPLATE		
	AREAS		
	AREAS CHECKED		

MODEL: Default
FILE NAME: P:\2018\180788\4 CADD - DWG\4.7 Tran\CADD Sheets\Federal\180788A-sht-XSEC.dgn

TWM ENGINEERING GEOSPATIAL SERVICES
TWM, INC.
WWW.TWM-INC.COM
IL DESIGN FIRM LICENSE NO: 184-001220

USER NAME = efisher	DESIGNED - EKF	REVISED -	
	DRAWN - EKF/KDD	REVISED -	
PLOT SCALE = 20.0000 ' / in.	CHECKED - JWS	REVISED -	
PLOT DATE = 6/17/2025	DATE - 06/2025	REVISED -	

ST. CLAIR COUNTY DEPARTMENT OF ROADS AND BRIDGES

CROSS SECTIONS

SCALE: 1"=10' | SHEET 40 OF 57 SHEETS | STA. 127+00.00 TO STA. 127+09.75

F.A.U. RTE.	SECTION	COUNTY	TOTAL SHEETS	SHEET NO.
9330	24-00301-26-PW	ST. CLAIR	191	174
		CONTRACT NO. 97872		
		ILLINOIS	FED. AID PROJECT	

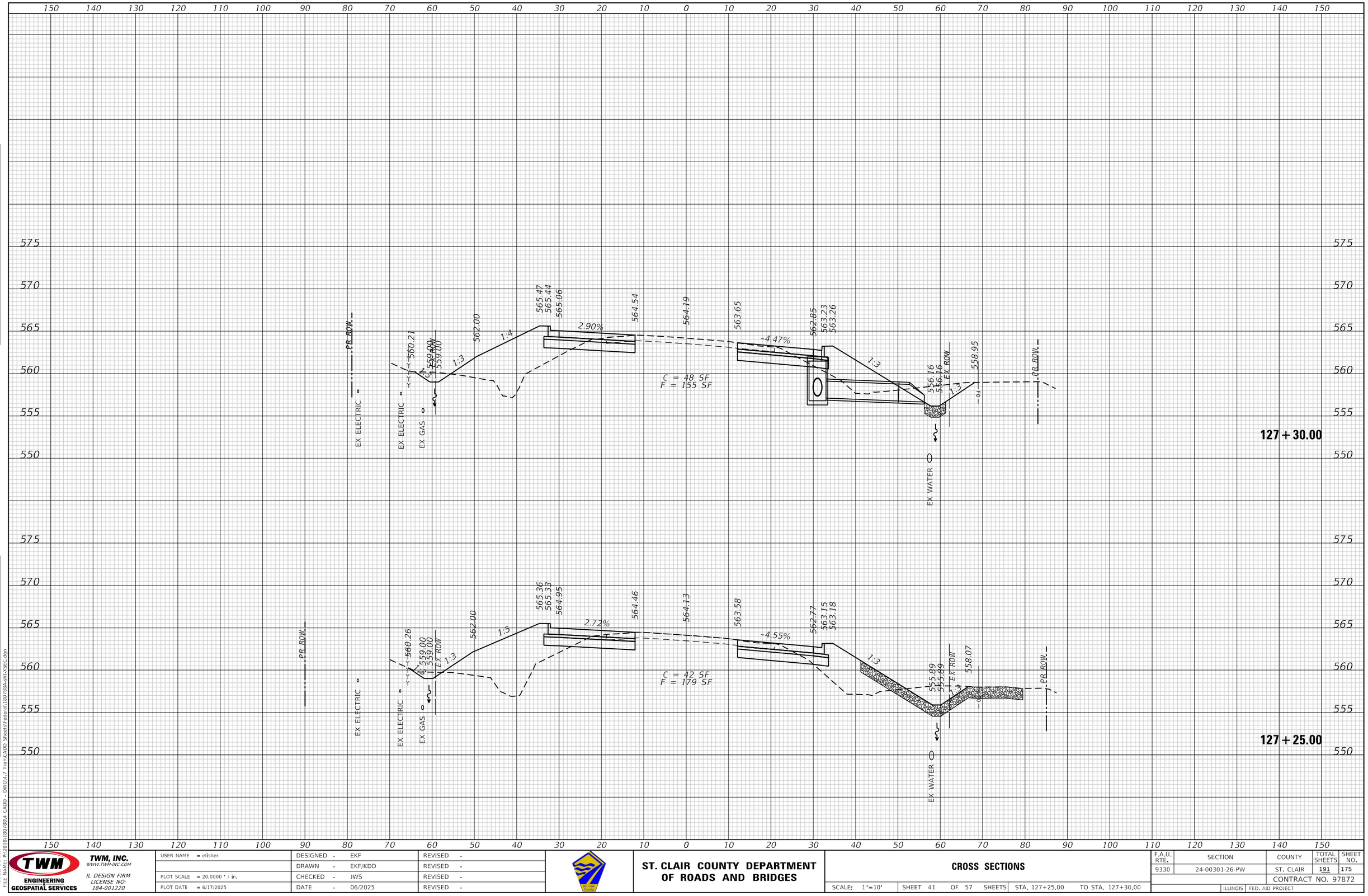

FINAL SURVEY		BY	DATE
NOTE BOOK	SURVEYED		
NO.	PLOTTED		
	TEMPLATE		
	AREAS		
	AREAS CHECKED		

ORIGINAL SURVEY		BY	DATE
NOTE BOOK	SURVEYED		
NO.	PLOTTED		
	TEMPLATE		
	AREAS		
	AREAS CHECKED		

MODEL: Default
FILE NAME: P:\2018\180788\4 CADD - DWG\4.7 Tran\CADD Sheets\Federal\180788A-sht-XSEC.dgn

TWM ENGINEERING & GEOSPATIAL SERVICES
TWM, INC.
WWW.TWM-INC.COM
IL DESIGN FIRM LICENSE NO: 184-001220

USER NAME = efisher	DESIGNED - EKF	REVISED -	
	DRAWN - EKF/KDD	REVISED -	
PLOT SCALE = 20.0000 ' / in.	CHECKED - JWS	REVISED -	
PLOT DATE = 6/17/2025	DATE - 06/2025	REVISED -	

ST. CLAIR COUNTY DEPARTMENT OF ROADS AND BRIDGES

CROSS SECTIONS

SCALE: 1"=10' | SHEET 41 OF 57 SHEETS | STA. 127+25.00 TO STA. 127+30.00

F.A.U. RTE.	SECTION	COUNTY	TOTAL SHEETS	SHEET NO.
9330	24-00301-26-PW	ST. CLAIR	191	175
		CONTRACT NO. 97872		
		ILLINOIS	FED. AID PROJECT	

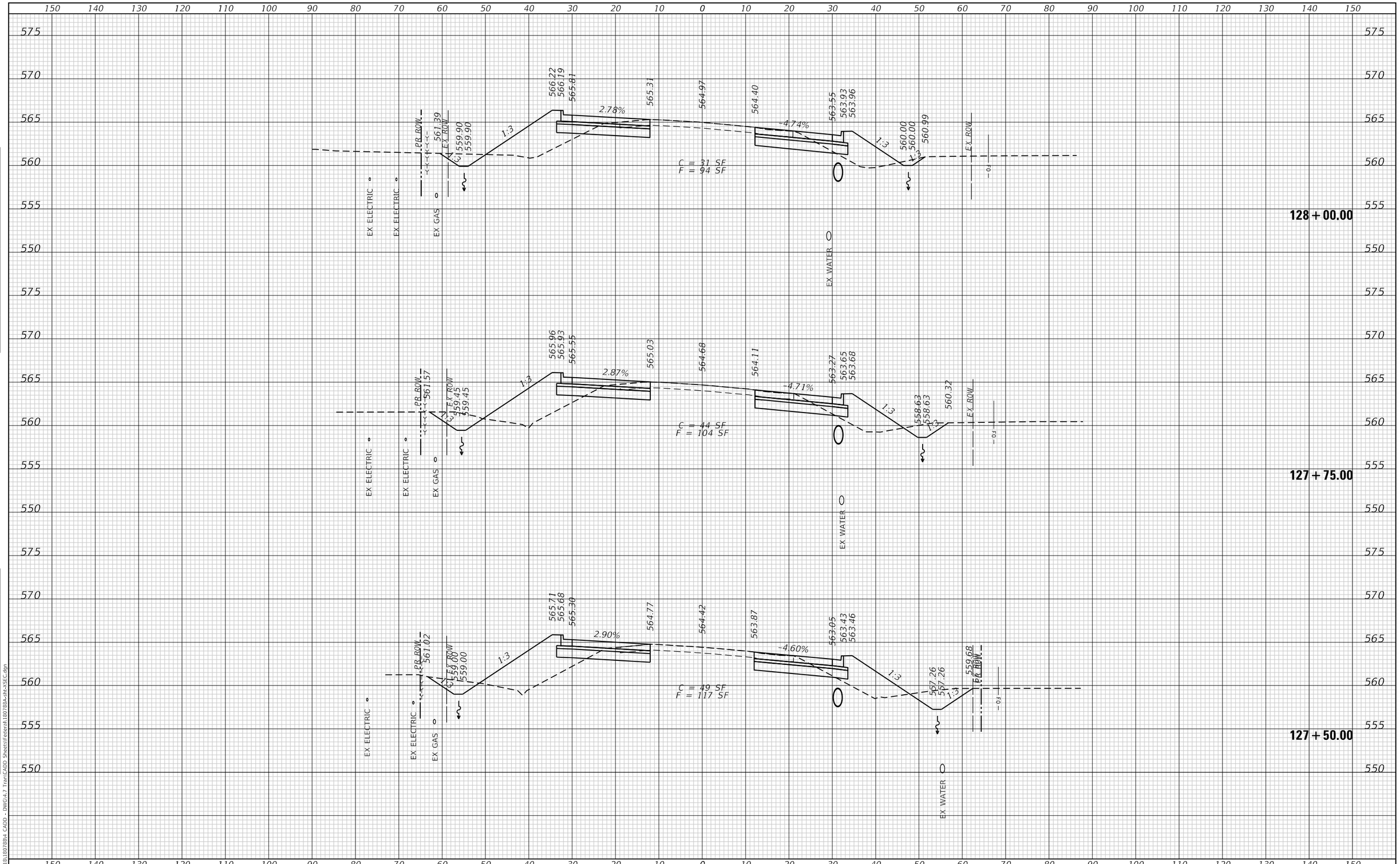

FINAL SURVEY | NOTE BOOK NO. | SURVEYED | PLOTTED | TEMPLATE | AREAS | AREAS CHECKED | BY | DATE

ORIGINAL SURVEY | NOTE BOOK NO. | SURVEYED | PLOTTED | TEMPLATE | AREAS | AREAS CHECKED | BY | DATE

MODEL: Default
FILE NAME: P:\2018\180788\4 CADD - DWG\4.7 Tran\CADD Sheets\Federal\180788A-sht-XSEC.dgn

TWM ENGINEERING & GEOSPATIAL SERVICES
TWM, INC.
WWW.TWM-INC.COM
IL DESIGN FIRM LICENSE NO: 184-001220

USER NAME = efisher	DESIGNED - EKF	REVISED -	
	DRAWN - EKF/KDD	REVISED -	
PLOT SCALE = 20.0000 ' / in.	CHECKED - JWS	REVISED -	
PLOT DATE = 6/17/2025	DATE - 06/2025	REVISED -	

ST. CLAIR COUNTY DEPARTMENT OF ROADS AND BRIDGES

CROSS SECTIONS

SCALE: 1"=10' | SHEET 42 OF 57 SHEETS | STA. 127+50.00 TO STA. 128+00.00

F.A.U. RTE.	SECTION	COUNTY	TOTAL SHEETS	SHEET NO.
9330	24-00301-26-PW	ST. CLAIR	191	176
		CONTRACT NO. 97872		
		ILLINOIS	FED. AID PROJECT	

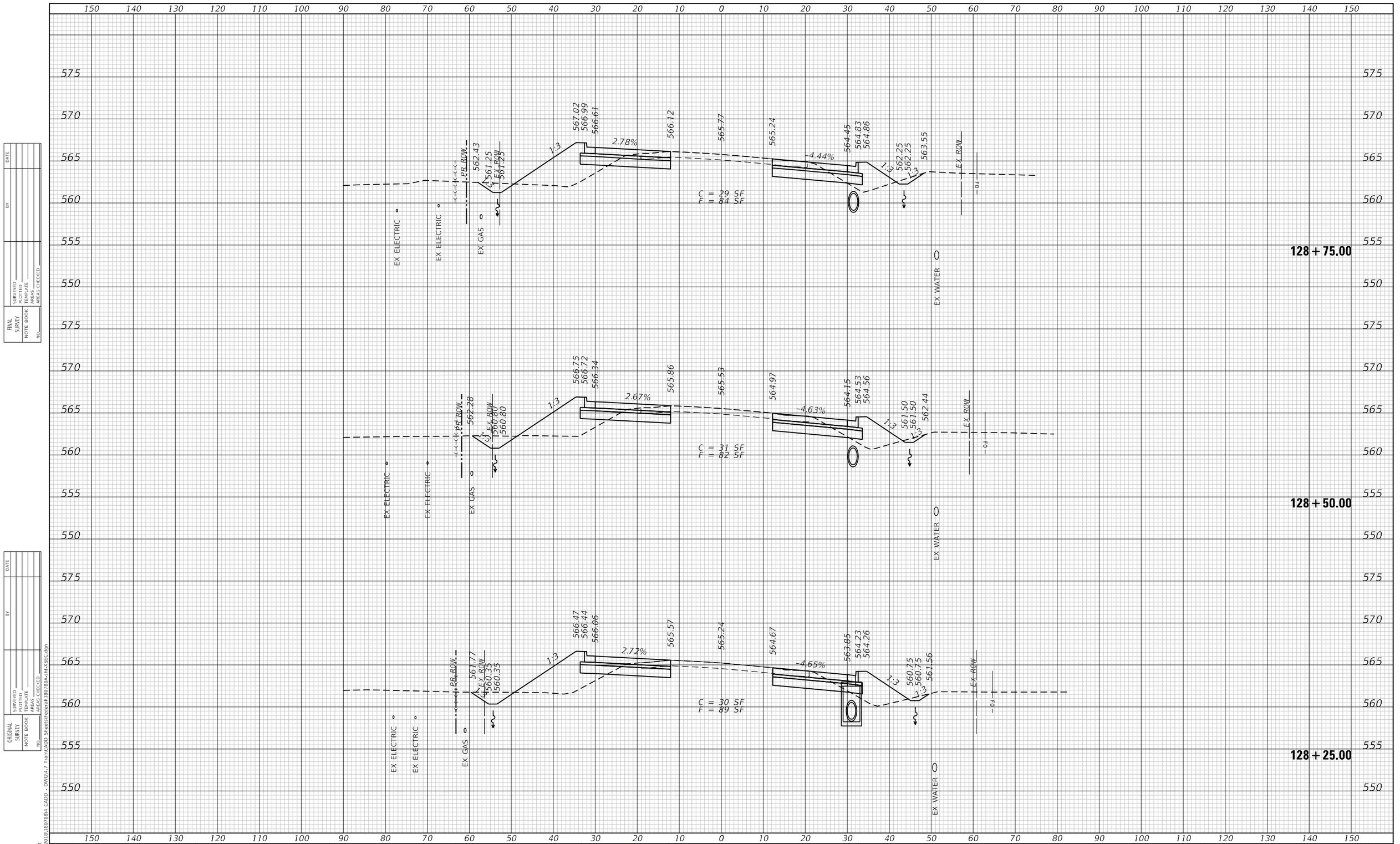

FINAL SURVEY | NOTE BOOK NO. | SURVEYED | PLOTTED | TEMPLATE | AREAS | AREAS CHECKED | BY | DATE

ORIGINAL SURVEY | NOTE BOOK NO. | SURVEYED | PLOTTED | TEMPLATE | AREAS | AREAS CHECKED | BY | DATE

MODEL: Default
FILE NAME: P:\2018\180788\4 CADD - DWG\4.7 Tran\CADD Sheets\Federal\180788A-sht-XSEC.dgn

TWM ENGINEERING & GEOSPATIAL SERVICES
TWM, INC.
WWW.TWM-INC.COM
IL DESIGN FIRM LICENSE NO: 184-001220

USER NAME = efisher	DESIGNED - EKF	REVISED -	
	DRAWN - EKF/KDD	REVISED -	
PLOT SCALE = 20.0000 ' / in.	CHECKED - JWS	REVISED -	
PLOT DATE = 6/17/2025	DATE - 06/2025	REVISED -	

ST. CLAIR COUNTY DEPARTMENT OF ROADS AND BRIDGES

CROSS SECTIONS

SCALE: 1"=10' | SHEET 43 OF 57 SHEETS | STA. 128+25.00 TO STA. 128+75.00

F.A.U. RTE.	SECTION	COUNTY	TOTAL SHEETS	SHEET NO.
9330	24-00301-26-PW	ST. CLAIR	191	177

CONTRACT NO. 97872

ILLINOIS | FED. AID PROJECT

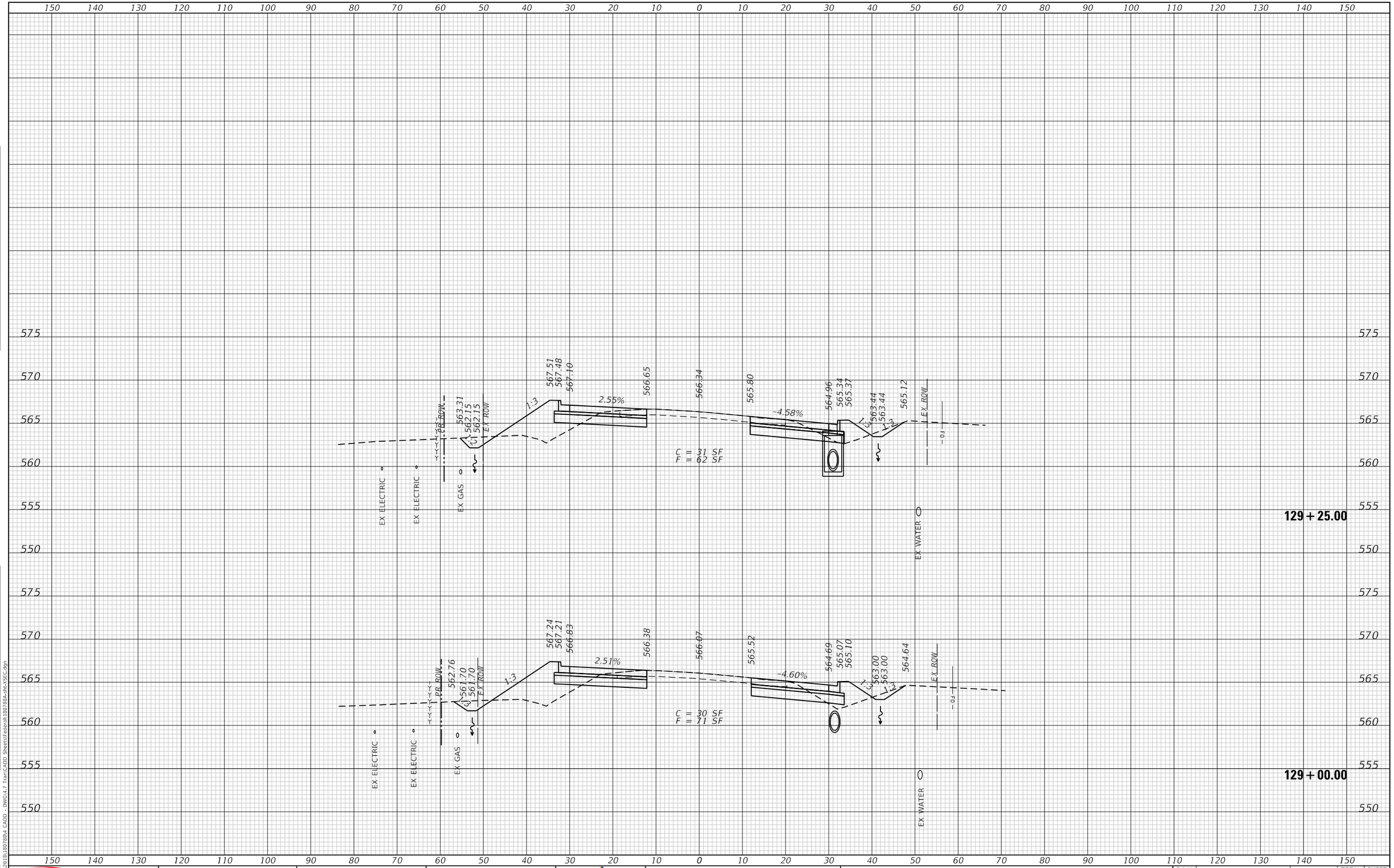

TWM ENGINEERING GEOSPATIAL SERVICES — TWM, INC. WWW.TWM-INC.COM — IL DESIGN FIRM LICENSE NO: 184-001220	USER NAME = efisher	DESIGNED - EKF	REVISED -	ST. CLAIR COUNTY DEPARTMENT OF ROADS AND BRIDGES	CROSS SECTIONS
		DRAWN - EKF/KDD	REVISED -		
	PLOT SCALE = 20.0000 ' / in.	CHECKED - JWS	REVISED -		
	PLOT DATE = 6/17/2025	DATE - 06/2025	REVISED -		SCALE: 1"=10' SHEET 44 OF 57 SHEETS STA. 129+00.00 TO STA. 129+25.00

F.A.U. RTE.	SECTION	COUNTY	TOTAL SHEETS	SHEET NO.
9330	24-00301-26-PW	ST. CLAIR	191	178
		CONTRACT NO. 97872		
		ILLINOIS	FED. AID PROJECT	

FINAL SURVEY — NOTE BOOK NO. — SURVEYED — PLOTTED — TEMPLATE — AREAS — AREAS CHECKED — BY — DATE

ORIGINAL SURVEY — NOTE BOOK NO. — SURVEYED — PLOTTED — TEMPLATE — AREAS — AREAS CHECKED — BY — DATE

MODEL: Default
FILE NAME: P:\2018\180788\4 CADD - DWG\4.7 Tran\CADD Sheets\Federal\180788A-sht-XSEC.dgn

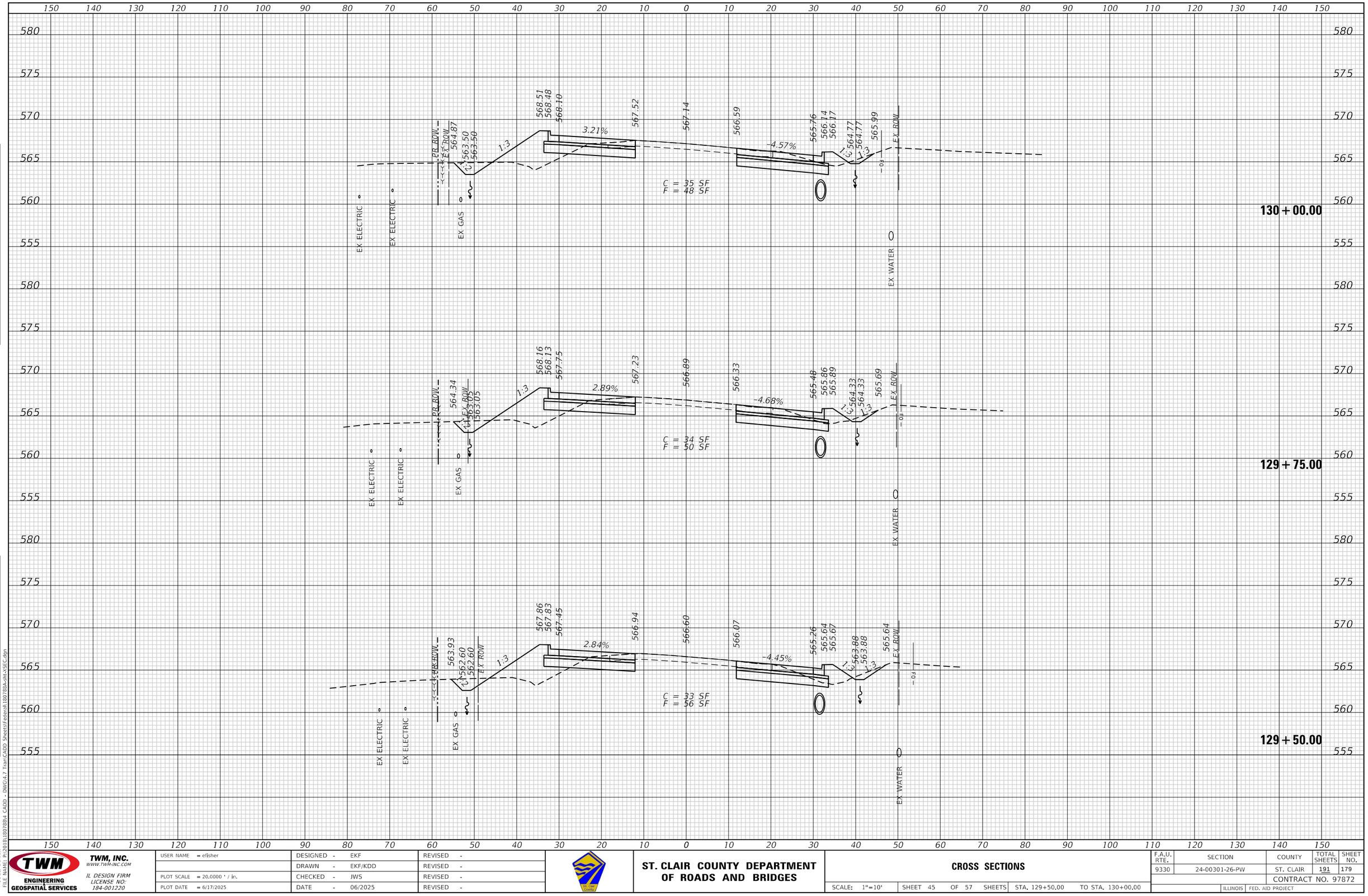

TWM, INC. WWW.TWM-INC.COM IL DESIGN FIRM LICENSE NO: 184-001220	USER NAME = efisher	DESIGNED - EKF	REVISED -	ST. CLAIR COUNTY DEPARTMENT OF ROADS AND BRIDGES	CROSS SECTIONS
		DRAWN - EKF/KDD	REVISED -		
	PLOT SCALE = 20.0000 ' / in.	CHECKED - JWS	REVISED -		
	PLOT DATE = 6/17/2025	DATE - 06/2025	REVISED -		SCALE: 1"=10' SHEET 45 OF 57 SHEETS STA. 129+50.00 TO STA. 130+00.00

F.A.U. RTE.	SECTION	COUNTY	TOTAL SHEETS	SHEET NO.
9330	24-00301-26-PW	ST. CLAIR	191	179
		CONTRACT NO. 97872		
		ILLINOIS	FED. AID PROJECT	

MODEL: Default
FILE NAME: P:\2018\180788\4 CADD - DWG\4.7 Tran\CADD Sheets\Federal\180788A-sht-XSEC.dgn

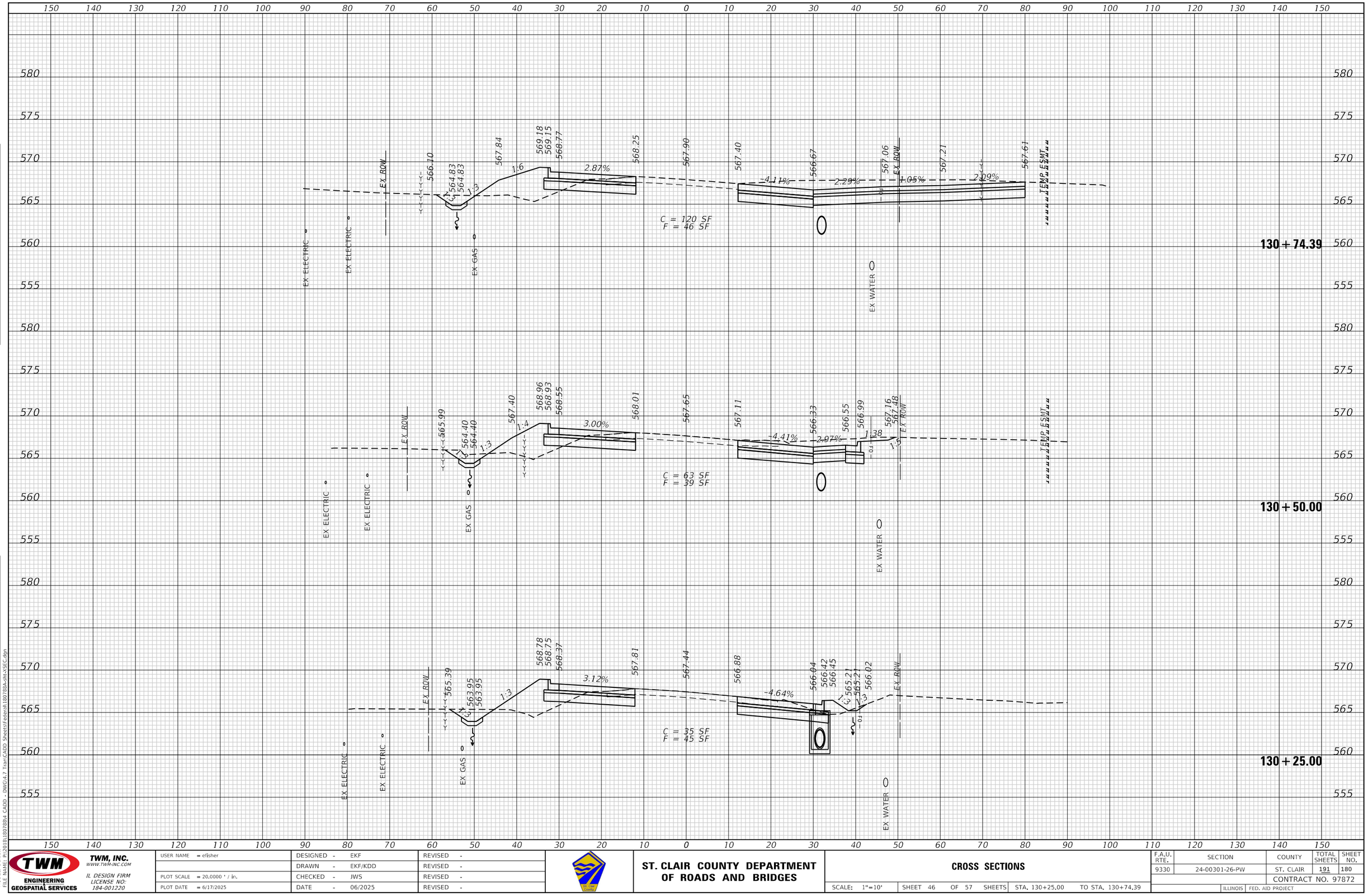

ORIGINAL SURVEY | NOTE BOOK | NO. | SURVEYED | PLOTTED | TEMPLATE | AREAS | AREAS CHECKED | BY | DATE

FINAL SURVEY | NOTE BOOK | NO. | SURVEYED | PLOTTED | TEMPLATE | AREAS | AREAS CHECKED | BY | DATE

MODEL: Default
FILE NAME: P:\2018\180788\4 CADD - DWG\4-7 TranCADD Sheets\Federal\180788A-alt-XSEc.dgn

USER NAME = efisher	DESIGNED - EKF	REVISED -	
	DRAWN - EKF/KDD	REVISED -	
PLOT SCALE = 20.0000 ' / in.	CHECKED - JWS	REVISED -	
PLOT DATE = 6/17/2025	DATE - 06/2025	REVISED -	

TWM ENGINEERING GEOSPATIAL SERVICES
TWM, INC.
WWW.TWM-INC.COM
IL DESIGN FIRM LICENSE NO: 184-001220

ST. CLAIR COUNTY DEPARTMENT OF ROADS AND BRIDGES

CROSS SECTIONS

SCALE: 1"=10' | SHEET 46 OF 57 SHEETS | STA. 130+25.00 | TO STA. 130+74.39

F.A.U. RTE.	SECTION	COUNTY	TOTAL SHEETS	SHEET NO.
9330	24-00301-26-PW	ST. CLAIR	191	180
		CONTRACT NO. 97872		
		ILLINOIS	FED. AID PROJECT	

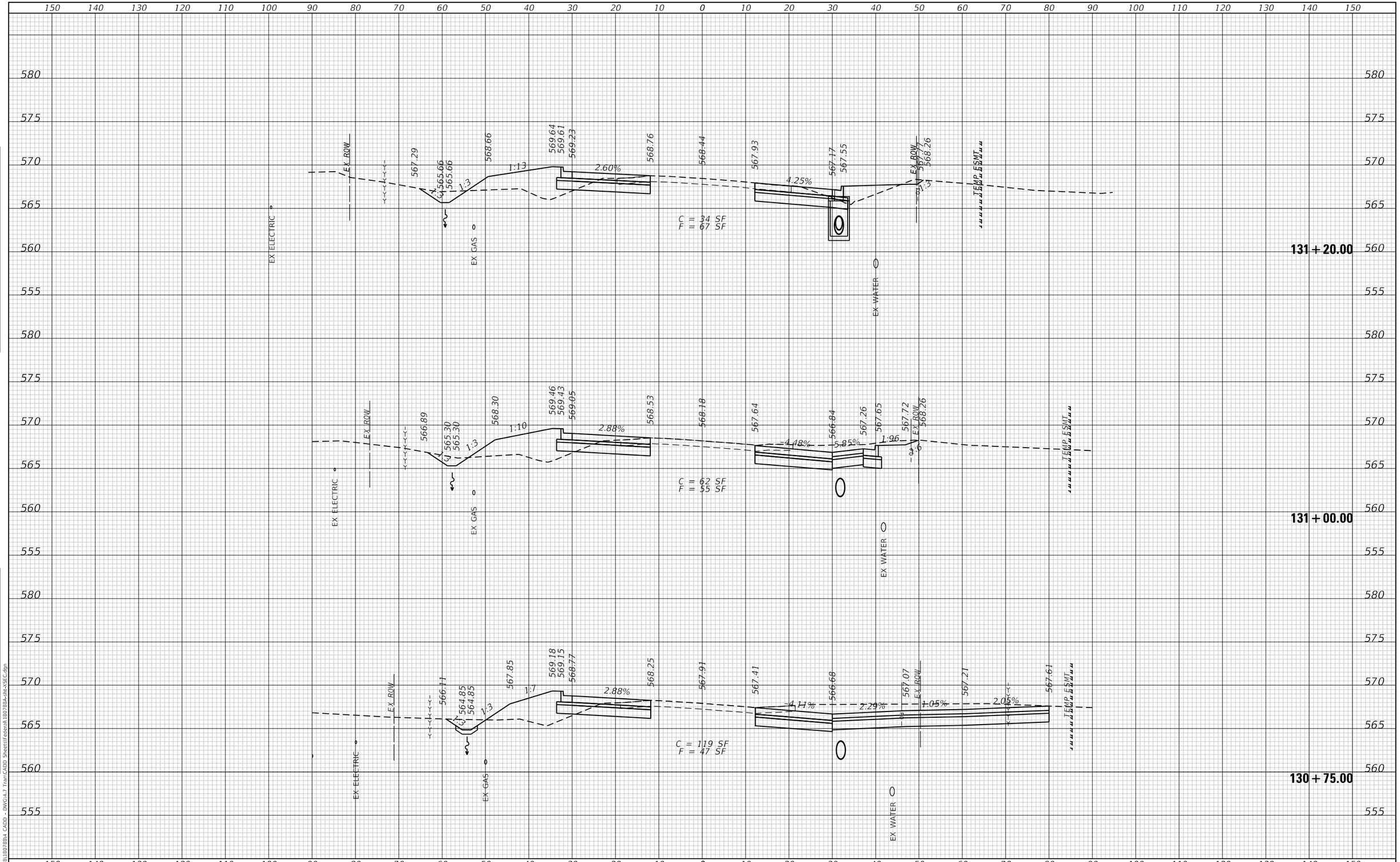

FINAL SURVEY | NOTE BOOK NO. | SURVEYED | PLOTTED | TEMPLATE | AREAS | AREAS CHECKED | BY | DATE

ORIGINAL SURVEY | NOTE BOOK NO. | SURVEYED | PLOTTED | TEMPLATE | AREAS | AREAS CHECKED | BY | DATE

MODEL: Default
FILE NAME: P:\2018\180788\4 CADD - DWG\4.7 Tran\CADD Sheets\Federal\180788A-sht-XSEC.dgn

TWM ENGINEERING & GEOSPATIAL SERVICES
TWM, INC.
WWW.TWM-INC.COM
IL DESIGN FIRM LICENSE NO: 184-001220

USER NAME = efisher	DESIGNED - EKF	REVISED -	
	DRAWN - EKF/KDD	REVISED -	
PLOT SCALE = 20.0000 ' / in.	CHECKED - JWS	REVISED -	
PLOT DATE = 6/17/2025	DATE - 06/2025	REVISED -	

ST. CLAIR COUNTY DEPARTMENT OF ROADS AND BRIDGES

CROSS SECTIONS

SCALE: 1"=10' | SHEET 47 OF 57 SHEETS | STA. 130+75.00 TO STA. 131+20.00

F.A.U. RTE.	SECTION	COUNTY	TOTAL SHEETS	SHEET NO.
9330	24-00301-26-PW	ST. CLAIR	191	181

CONTRACT NO. 97872

ILLINOIS | FED. AID PROJECT

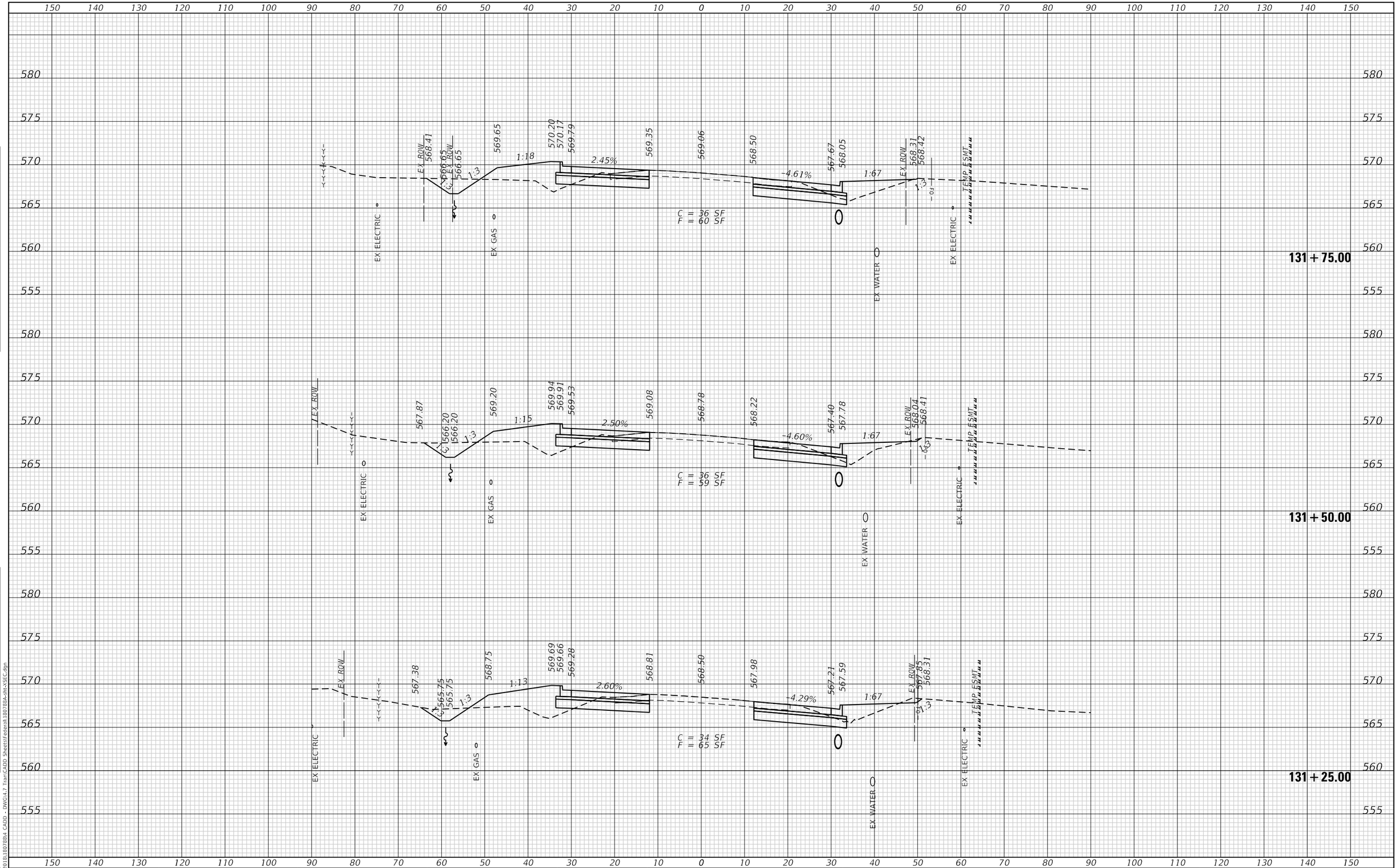

TWM ENGINEERING GEOSPATIAL SERVICES	TWM, INC. WWW.TWM-INC.COM IL DESIGN FIRM LICENSE NO: 184-001220	USER NAME = efisher	DESIGNED - EKF	REVISED -	
			DRAWN - EKF/KDD	REVISED -	
		PLOT SCALE = 20.0000 ' / in.	CHECKED - JWS	REVISED -	
		PLOT DATE = 6/17/2025	DATE - 06/2025	REVISED -	

ST. CLAIR COUNTY DEPARTMENT OF ROADS AND BRIDGES

CROSS SECTIONS

SCALE: 1"=10' | SHEET 48 OF 57 SHEETS | STA. 131+25.00 TO STA. 131+75.00

F.A.U. RTE.	SECTION	COUNTY	TOTAL SHEETS	SHEET NO.
9330	24-00301-26-PW	ST. CLAIR	191	182
		CONTRACT NO. 97872		
		ILLINOIS	FED. AID PROJECT	

FINAL SURVEY: SURVEYED, PLOTTED, TEMPLATE, AREAS, AREAS CHECKED — NOTE BOOK NO. — BY — DATE

ORIGINAL SURVEY: SURVEYED, PLOTTED, TEMPLATE, AREAS, AREAS CHECKED — NOTE BOOK NO. — BY — DATE

MODEL: Default
FILE NAME: P:\2018\180788\4 CADD - DWG\4.7 Tran\CADD Sheets\Federal\180788A-sht-XSEC.dgn

FINAL SURVEY	SURVEYED	BY	DATE
NOTE BOOK	PLOTTED		
NO.	TEMPLATE		
	AREAS		
	AREAS CHECKED		

ORIGINAL SURVEY	SURVEYED	BY	DATE
NOTE BOOK	PLOTTED		
NO.	TEMPLATE		
	AREAS		
	AREAS CHECKED		

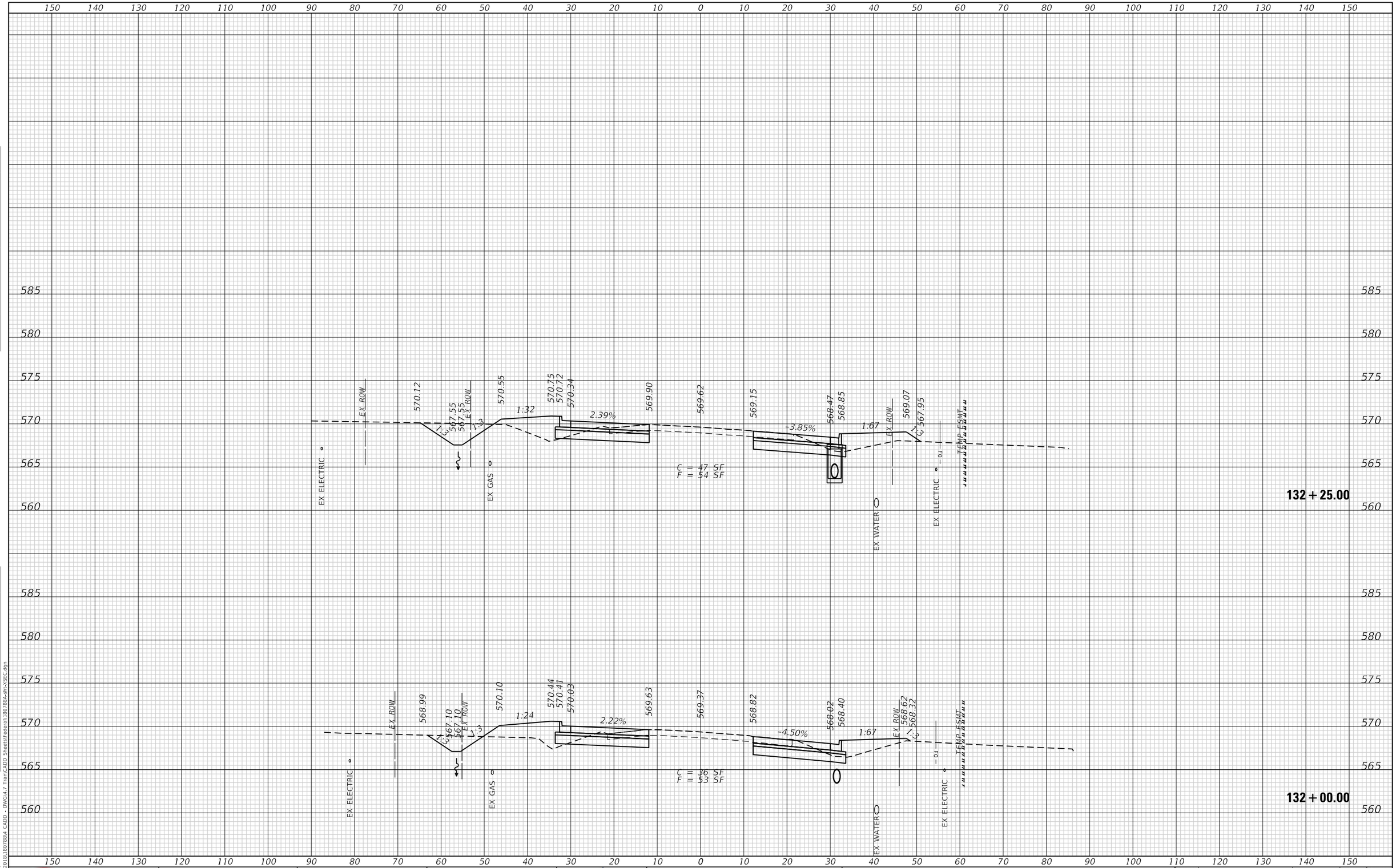

MODEL: Default
FILE NAME: P:\2018\180788\4 CADD - DWG\4-7 TranCADD Sheets\Federal\180788A-alt-XSEc.dgn

TWM, INC. WWW.TWM-INC.COM ENGINEERING GEOSPATIAL SERVICES IL DESIGN FIRM LICENSE NO: 184-001220	USER NAME = Kdeconcini	DESIGNED - EKF	REVISED -
		DRAWN - EKF/KDD	REVISED -
	PLOT SCALE = 20.0000 ' / in.	CHECKED - JWS	REVISED -
	PLOT DATE = 10/17/2025	DATE - 06/2025	REVISED -

ST. CLAIR COUNTY DEPARTMENT OF ROADS AND BRIDGES

CROSS SECTIONS

SCALE: 1"=10' | SHEET 49 OF 57 SHEETS | STA. 132+00.00 | TO STA. 132+25.00

F.A.U. RTE.	SECTION	COUNTY	TOTAL SHEETS	SHEET NO.
9330	24-00301-26-PW	ST. CLAIR	191	183
		CONTRACT NO. 97872		
		ILLINOIS	FED. AID PROJECT	

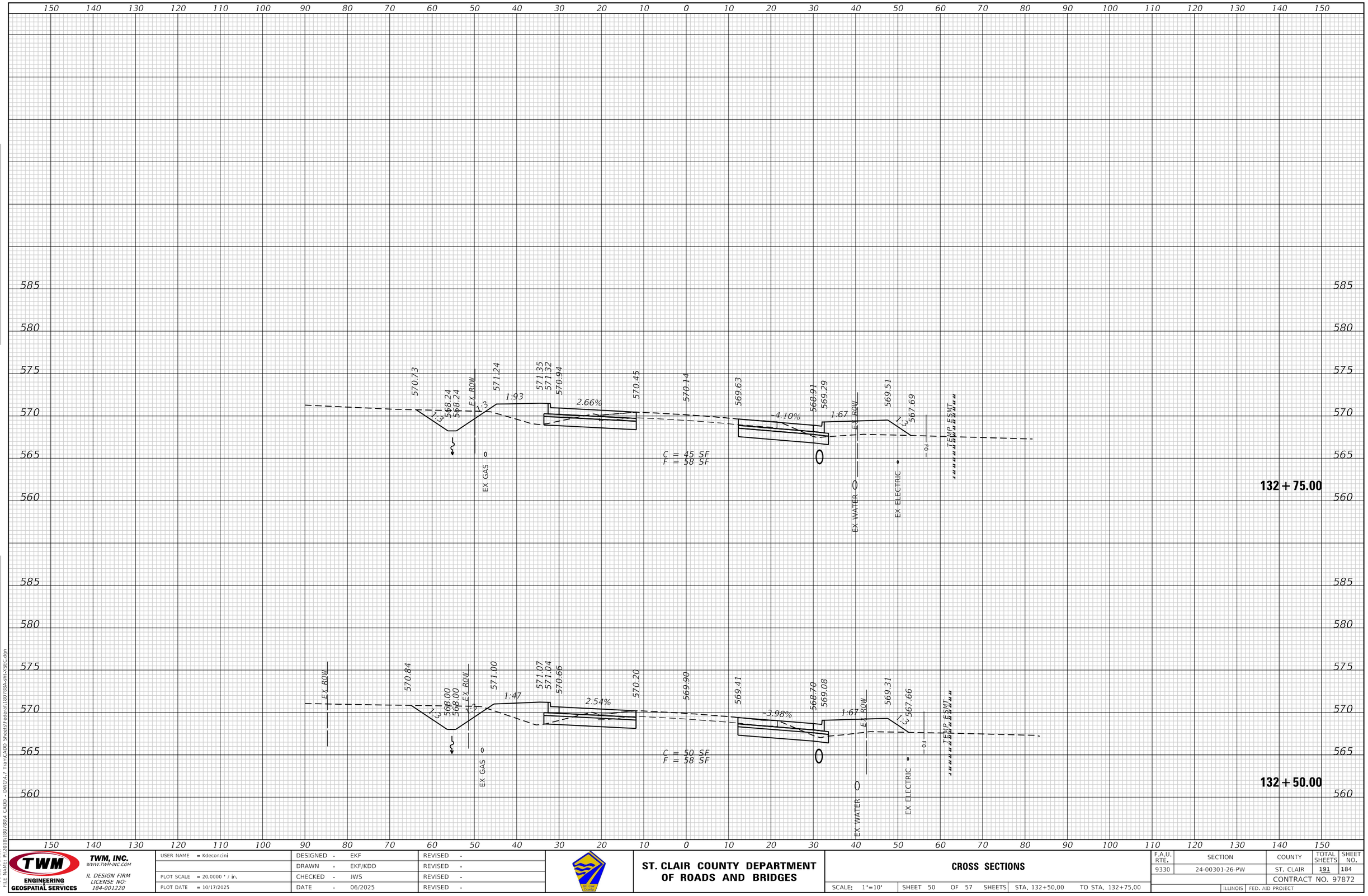

FINAL SURVEY		BY	DATE
NOTE BOOK NO.	SURVEYED		
	PLOTTED		
	TEMPLATE		
	AREAS		
	AREAS CHECKED		

ORIGINAL SURVEY		BY	DATE
NOTE BOOK NO.	SURVEYED		
	PLOTTED		
	TEMPLATE		
	AREAS		
	AREAS CHECKED		

MODEL: Default
FILE NAME: P:\2018\180788\4 CADD - DWG\4.7 Tran\CADD Sheets\Federal\180788A-sht-XSEC.dgn

TWM ENGINEERING GEOSPATIAL SERVICES

TWM, INC.
WWW.TWM-INC.COM
IL DESIGN FIRM LICENSE NO: 184-001220

USER NAME = Kdeconcini	DESIGNED - EKF	REVISED -	
	DRAWN - EKF/KDD	REVISED -	
PLOT SCALE = 20.0000 ' / in.	CHECKED - JWS	REVISED -	
PLOT DATE = 10/17/2025	DATE - 06/2025	REVISED -	

ST. CLAIR COUNTY DEPARTMENT OF ROADS AND BRIDGES

CROSS SECTIONS

SCALE: 1"=10' | SHEET 50 OF 57 SHEETS | STA. 132+50.00 TO STA. 132+75.00

F.A.U. RTE.	SECTION	COUNTY	TOTAL SHEETS	SHEET NO.
9330	24-00301-26-PW	ST. CLAIR	191	184
		CONTRACT NO. 97872		
		ILLINOIS	FED. AID PROJECT	

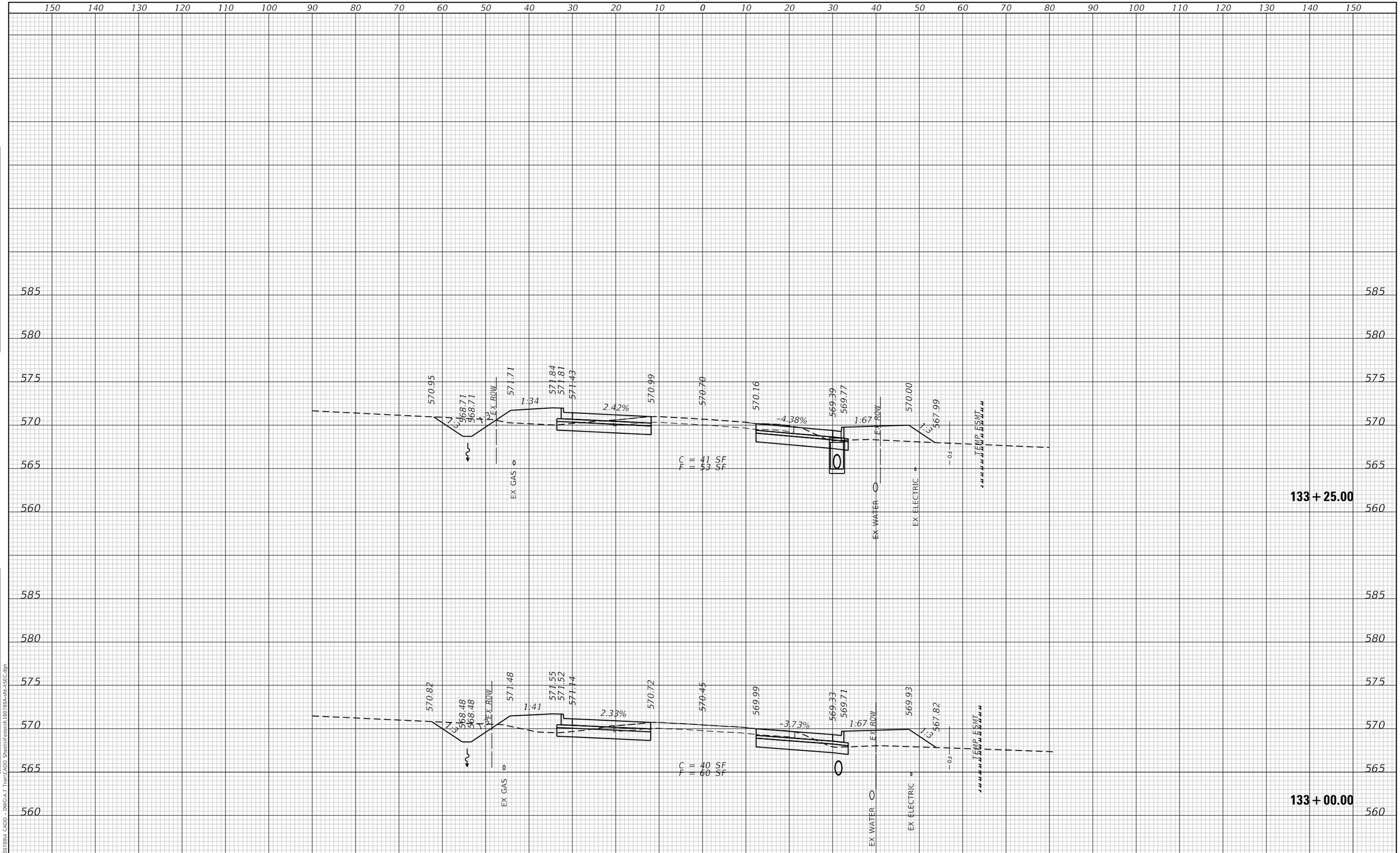

FINAL SURVEY		BY	DATE
NOTE BOOK NO.	SURVEYED		
	PLOTTED		
	TEMPLATE		
	AREAS		
	AREAS CHECKED		

ORIGINAL SURVEY		BY	DATE
NOTE BOOK NO.	SURVEYED		
	PLOTTED		
	TEMPLATE		
	AREAS		
	AREAS CHECKED		

MODEL: Default
FILE NAME: P:\2018\180788\4 CADD - DWG\4.7 Tran\CADD Sheets\Federal\180788A-sht-XSEC.dgn

TWM ENGINEERING & GEOSPATIAL SERVICES
TWM, INC.
WWW.TWM-INC.COM
IL DESIGN FIRM LICENSE NO: 184-001220

USER NAME = Kdeconcini	DESIGNED - EKF	REVISED -	
	DRAWN - EKF/KDD	REVISED -	
PLOT SCALE = 20.0000 ' / in.	CHECKED - JWS	REVISED -	
PLOT DATE = 10/17/2025	DATE - 06/2025	REVISED -	

ST. CLAIR COUNTY DEPARTMENT OF ROADS AND BRIDGES

CROSS SECTIONS

SCALE: 1"=10' | SHEET 51 OF 57 SHEETS | STA. 133+00.00 TO STA. 133+25.00

F.A.U. RTE.	SECTION	COUNTY	TOTAL SHEETS	SHEET NO.
9330	24-00301-26-PW	ST. CLAIR	191	185
		CONTRACT NO. 97872		
		ILLINOIS	FED. AID PROJECT	

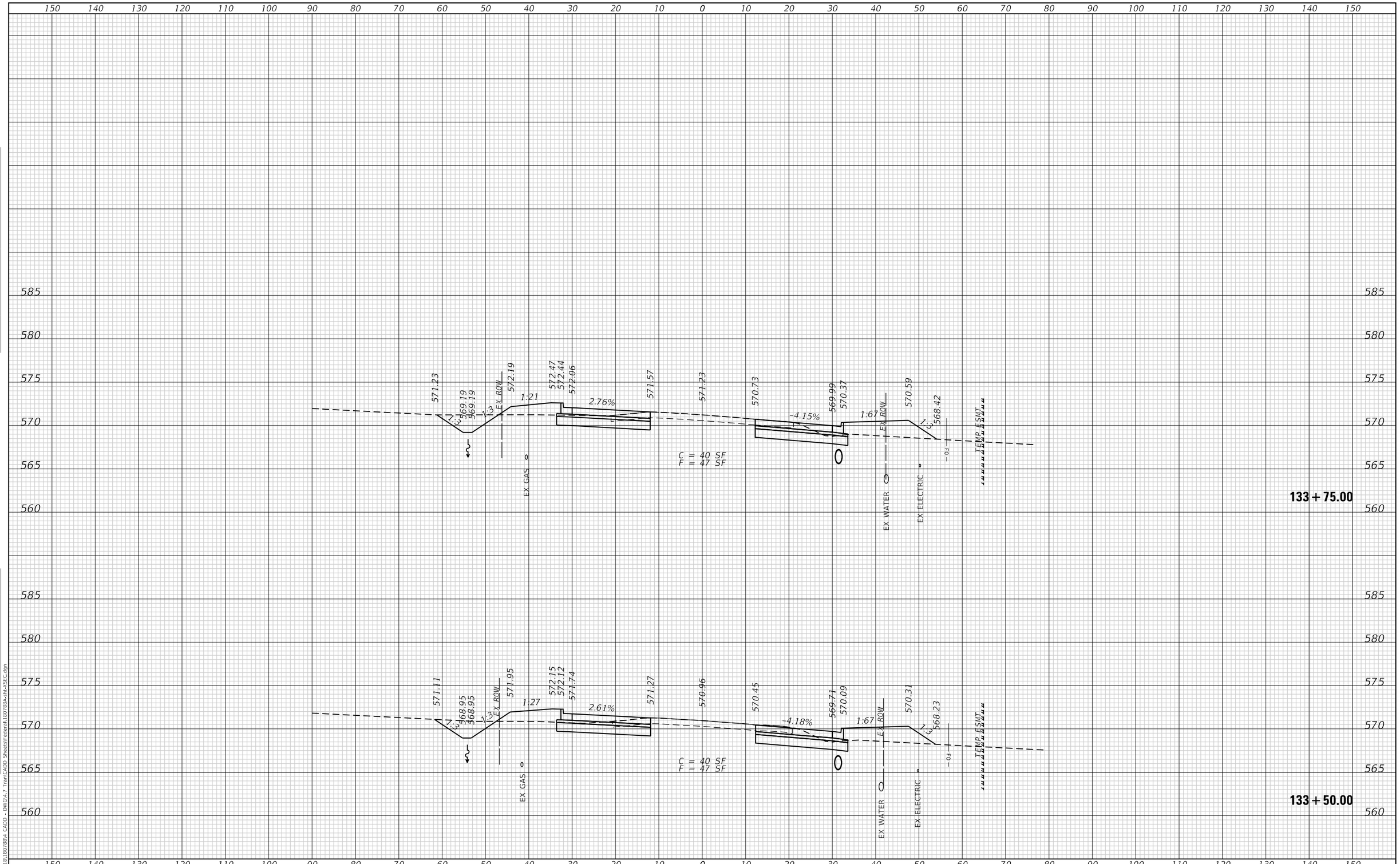

TWM ENGINEERING GEOSPATIAL SERVICES	TWM, INC. WWW.TWM-INC.COM IL DESIGN FIRM LICENSE NO: 184-001220	USER NAME = Kdeconcini	DESIGNED - EKF	REVISED -	ST. CLAIR COUNTY DEPARTMENT OF ROADS AND BRIDGES	CROSS SECTIONS	F.A.U. RTE. 9330	SECTION 24-00301-26-PW	COUNTY ST. CLAIR	TOTAL SHEETS 191	SHEET NO. 186
			DRAWN - EKF/KDD	REVISED -					CONTRACT NO. 97872		
		PLOT SCALE = 20.0000 ' / in.	CHECKED - JWS	REVISED -							
		PLOT DATE = 10/17/2025	DATE - 06/2025	REVISED -		SCALE: 1"=10' SHEET 52 OF 57 SHEETS STA. 133+50.00 TO STA. 133+75.00			ILLINOIS FED. AID PROJECT		

FINAL SURVEY — NOTE BOOK NO. — SURVEYED — PLOTTED — TEMPLATE — AREAS — AREAS CHECKED — BY — DATE

ORIGINAL SURVEY — NOTE BOOK NO. — SURVEYED — PLOTTED — TEMPLATE — AREAS — AREAS CHECKED — BY — DATE

MODEL: Default
FILE NAME: P:\2018\180788\4 CADD - DWG\4.7 Tran\CADD Sheets\Federal\180788A-sht-XSEC.dgn

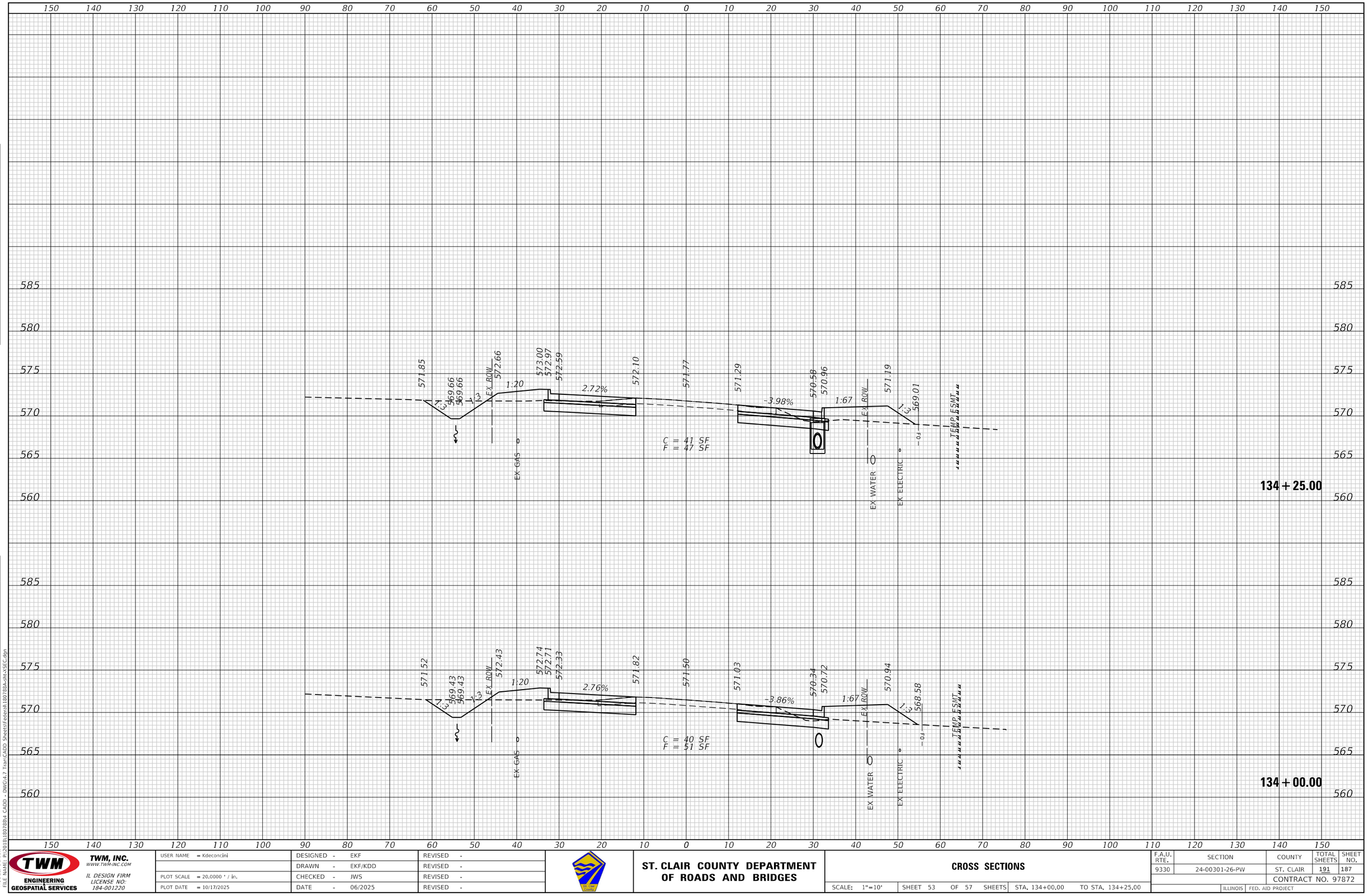

TWM ENGINEERING GEOSPATIAL SERVICES	TWM, INC. WWW.TWM-INC.COM IL DESIGN FIRM LICENSE NO: 184-001220	USER NAME = Kdeconcini	DESIGNED - EKF	REVISED -	ST. CLAIR COUNTY DEPARTMENT OF ROADS AND BRIDGES
			DRAWN - EKF/KDD	REVISED -	
		PLOT SCALE = 20.0000 ' / in.	CHECKED - JWS	REVISED -	
		PLOT DATE = 10/17/2025	DATE - 06/2025	REVISED -	

CROSS SECTIONS

SCALE: 1"=10' | SHEET 53 OF 57 SHEETS | STA. 134+00.00 | TO STA. 134+25.00

F.A.U. RTE.	SECTION	COUNTY	TOTAL SHEETS	SHEET NO.
9330	24-00301-26-PW	ST. CLAIR	191	187
		CONTRACT NO. 97872		
		ILLINOIS	FED. AID PROJECT	

FINAL SURVEY — NOTE BOOK — NO. — SURVEYED — PLOTTED — TEMPLATE — AREAS — AREAS CHECKED — BY — DATE

ORIGINAL SURVEY — NOTE BOOK — NO. — SURVEYED — PLOTTED — TEMPLATE — AREAS — AREAS CHECKED — BY — DATE

MODEL: Default
FILE NAME: P:\2018\180788\4 CADD - DWG\4-7 TranCADD Sheets\Federal\180788A-alt-XSEC.dgn

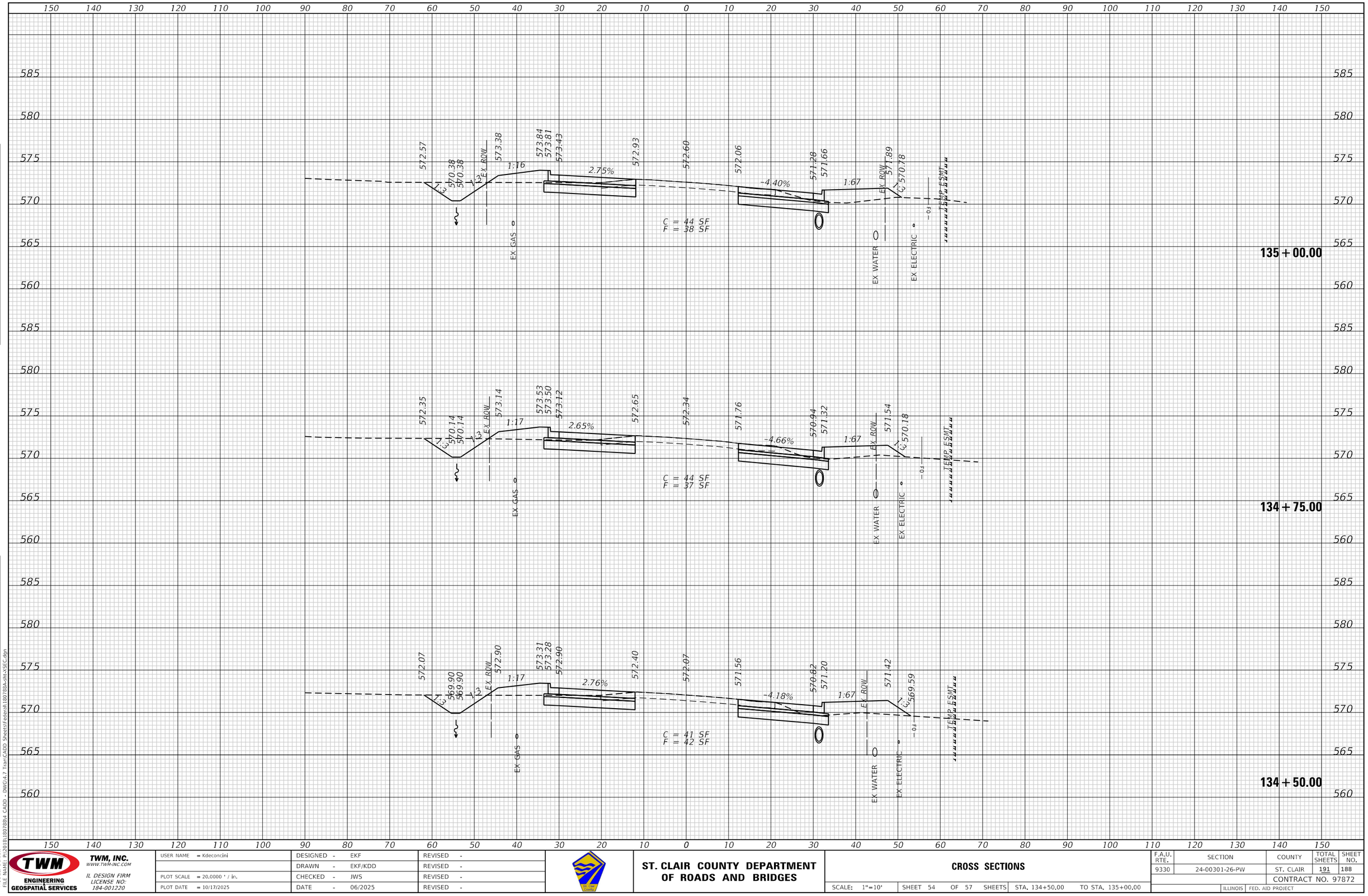

FINAL SURVEY	BY	DATE
NOTE BOOK	SURVEYED	
NO.	PLOTTED	
	TEMPLATE	
	AREAS	
	AREAS CHECKED	

ORIGINAL SURVEY	BY	DATE
NOTE BOOK	SURVEYED	
NO.	PLOTTED	
	TEMPLATE	
	AREAS	
	AREAS CHECKED	

MODEL: Default
FILE NAME: P:\2018\18078\04 CADD - DWG\4.7 Trom\CADD Sheets\Federal\18078A-sht-XSEC.dgn

TWM, INC.
WWW.TWM-INC.COM
ENGINEERING
GEOSPATIAL SERVICES
IL DESIGN FIRM
LICENSE NO:
184-001220

USER NAME = Kdeconcini	DESIGNED - EKF	REVISED -	
	DRAWN - EKF/KDD	REVISED -	
PLOT SCALE = 20.0000 ' / in.	CHECKED - JWS	REVISED -	
PLOT DATE = 10/17/2025	DATE - 06/2025	REVISED -	

ST. CLAIR COUNTY DEPARTMENT OF ROADS AND BRIDGES

CROSS SECTIONS

SCALE: 1"=10' | SHEET 54 OF 57 SHEETS | STA. 134+50.00 | TO STA. 135+00.00

F.A.U. RTE.	SECTION	COUNTY	TOTAL SHEETS	SHEET NO.
9330	24-00301-26-PW	ST. CLAIR	191	188
		CONTRACT NO. 97872		
		ILLINOIS	FED. AID PROJECT	

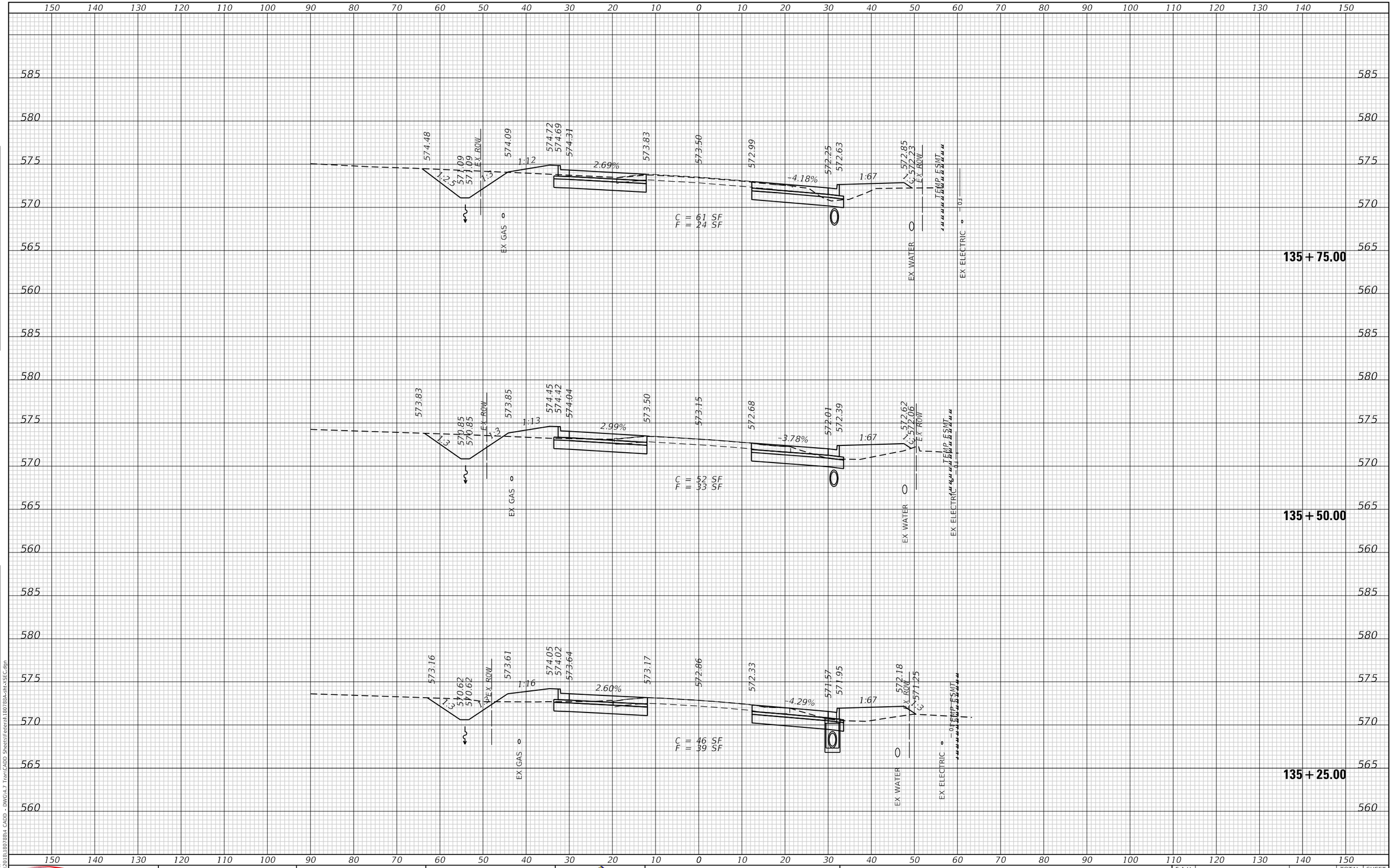

TWM ENGINEERING & GEOSPATIAL SERVICES — TWM, INC. WWW.TWM-INC.COM — IL DESIGN FIRM LICENSE NO: 184-001220	USER NAME = Kdeconcini	DESIGNED - EKF	REVISED -	ST. CLAIR COUNTY DEPARTMENT OF ROADS AND BRIDGES	CROSS SECTIONS
		DRAWN - EKF/KDD	REVISED -		
	PLOT SCALE = 20.0000 ' / in.	CHECKED - JWS	REVISED -		
	PLOT DATE = 10/17/2025	DATE - 06/2025	REVISED -		SCALE: 1"=10' SHEET 55 OF 57 SHEETS STA. 135+25.00 TO STA. 135+75.00

F.A.U. RTE.	SECTION	COUNTY	TOTAL SHEETS	SHEET NO.
9330	24-00301-26-PW	ST. CLAIR	191	189
		CONTRACT NO. 97872		
		ILLINOIS	FED. AID PROJECT	

MODEL: Default
FILE NAME: P:\2018\180788\4 CADD - DWG\4.7 Tran\CADD Sheets\Federal\180788A-sht-XSEC.dgn

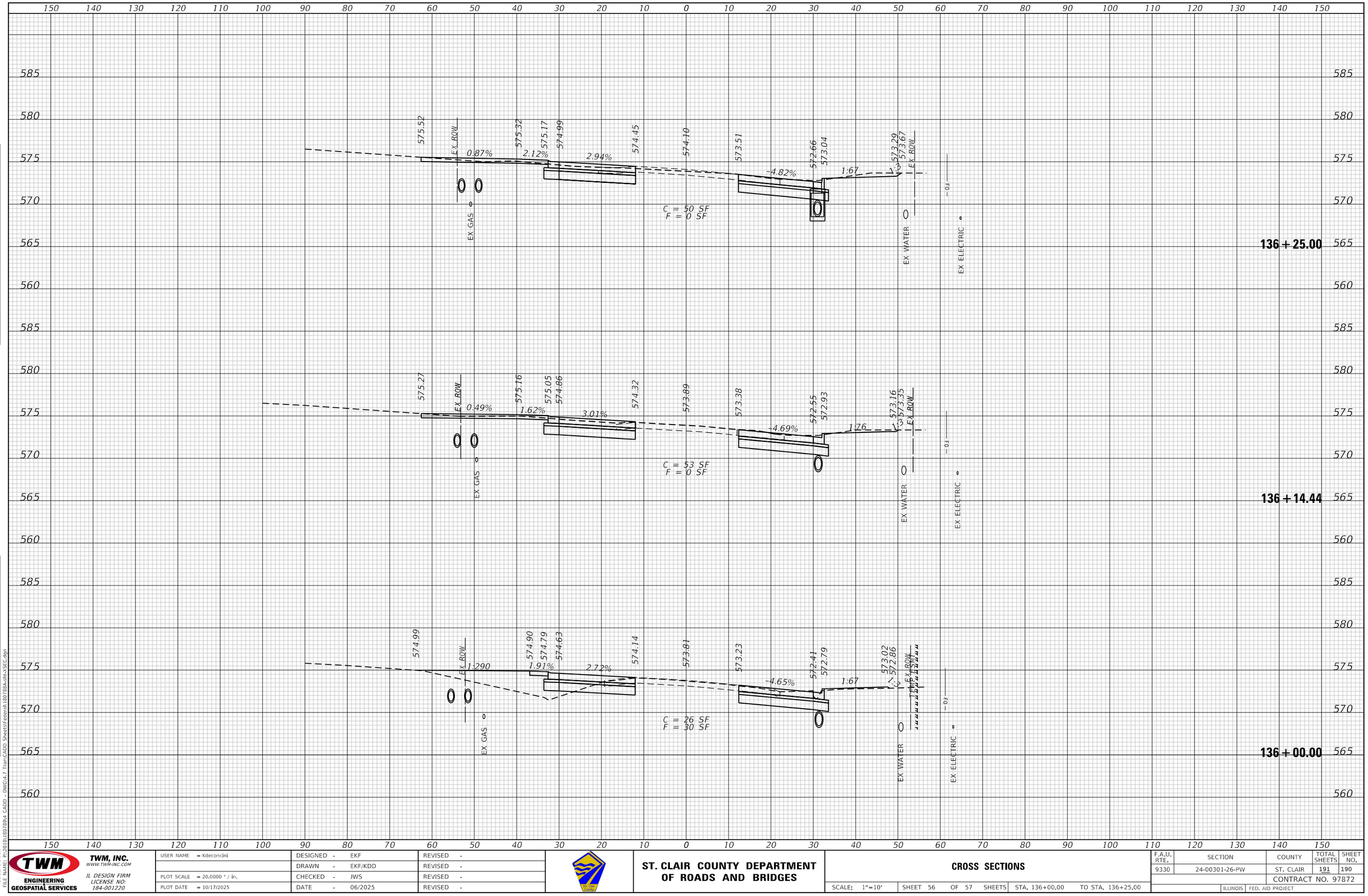

TWM ENGINEERING GEOSPATIAL SERVICES	TWM, INC. WWW.TWM-INC.COM IL DESIGN FIRM LICENSE NO: 184-001220	USER NAME = Kdeconcini	DESIGNED - EKF	REVISED -	ST. CLAIR COUNTY DEPARTMENT OF ROADS AND BRIDGES
			DRAWN - EKF/KDD	REVISED -	
		PLOT SCALE = 20.0000 ' / in.	CHECKED - JWS	REVISED -	
		PLOT DATE = 10/17/2025	DATE - 06/2025	REVISED -	

CROSS SECTIONS

SCALE: 1"=10' | SHEET 56 OF 57 SHEETS | STA. 136+00.00 TO STA. 136+25.00

F.A.U. RTE.	SECTION	COUNTY	TOTAL SHEETS	SHEET NO.
9330	24-00301-26-PW	ST. CLAIR	191	190

CONTRACT NO. 97872

ILLINOIS | FED. AID PROJECT

MODEL: Default
FILE NAME: P:\2018\180788\4 CADD - DWG\4.7 Tran\CADD Sheets\Federal\180788A-sht-XSEC.dgn

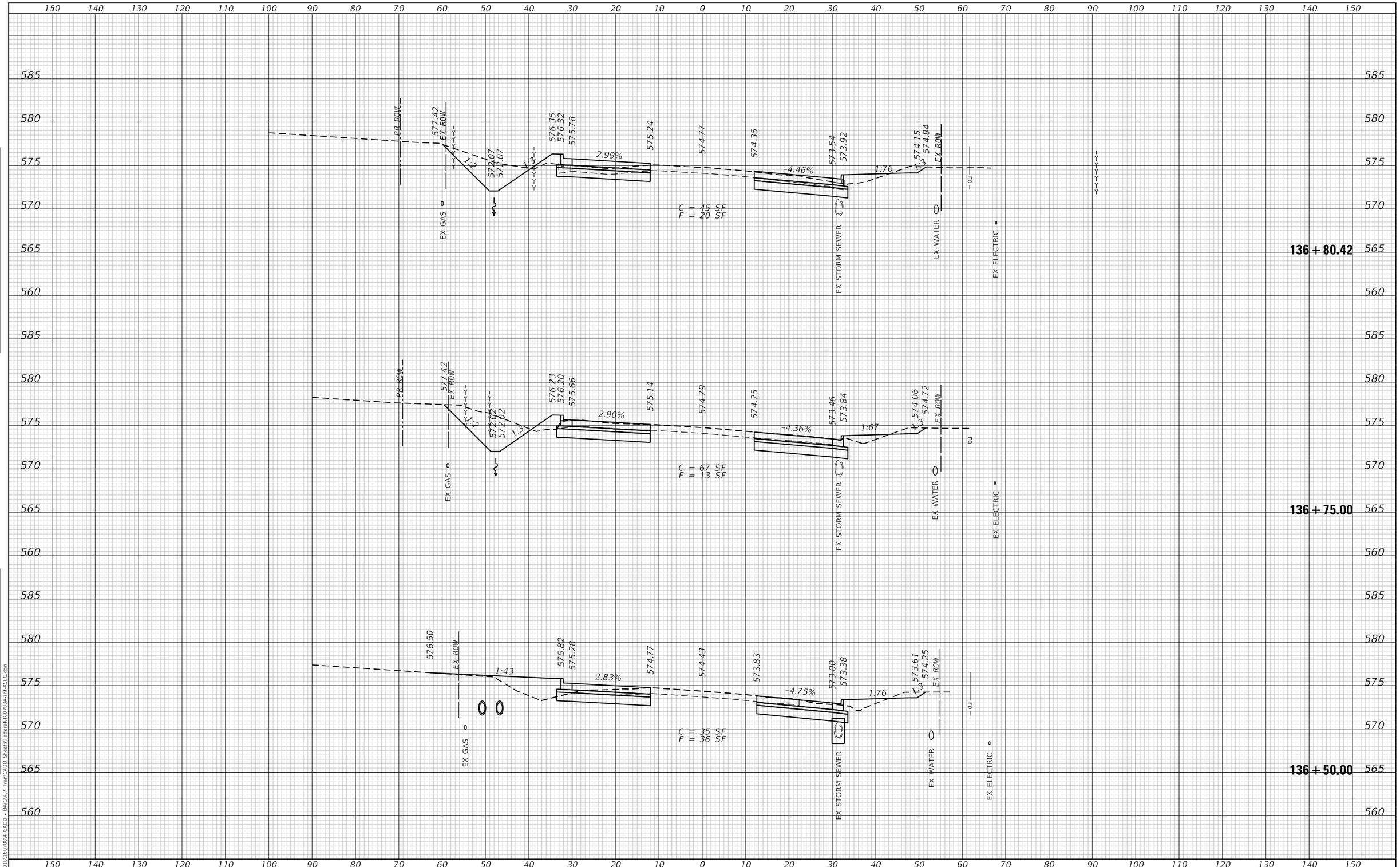

FINAL SURVEY | NOTE BOOK NO. | SURVEYED | PLOTTED | TEMPLATE | AREAS | AREAS CHECKED | BY | DATE

ORIGINAL SURVEY | NOTE BOOK NO. | SURVEYED | PLOTTED | TEMPLATE | AREAS | AREAS CHECKED | BY | DATE

MODEL: Default
FILE NAME: P:\2018\18078\4 CADD - DWG\4.7 Tran\CADD Sheets\Federal\18078A-sht-XSEC.dgn

TWM ENGINEERING & GEOSPATIAL SERVICES
TWM, INC.
WWW.TWM-INC.COM
IL DESIGN FIRM LICENSE NO: 184-001220

USER NAME = Kdeconcini	DESIGNED - EKF	REVISED -	
	DRAWN - EKF/KDD	REVISED -	
PLOT SCALE = 20.0000 ' / in.	CHECKED - JWS	REVISED -	
PLOT DATE = 10/17/2025	DATE - 06/2025	REVISED -	

ST. CLAIR COUNTY DEPARTMENT OF ROADS AND BRIDGES

CROSS SECTIONS

SCALE: 1"=10' | SHEET 57 OF 57 SHEETS | STA. 136+50.00 TO STA. 136+80.42

F.A.U. RTE.	SECTION	COUNTY	TOTAL SHEETS	SHEET NO.
9330	24-00301-26-PW	ST. CLAIR	191	191

CONTRACT NO. 97872

ILLINOIS | FED. AID PROJECT